Proceedings of the Institute of Acoustics

FINITE ELEMENT ANALYSIS OF STRUCTURAL-ACOUSTIC INTERACTION IN SIMPLIFIED MODELS OF ROAD VEHICLES

VB Georgiev
VV Krylov
RETB Winward

Department of Aeronautical and Automotive Engineering, Loughborough University, Loughborough, Leicestershire LE11 3TU, UK

1 INTRODUCTION

Vehicle interior noise is a very important issue for automotive industry.[1-4] The tendency to lighten up a car body structure leads to the reduction of its natural frequencies of vibration and to the rise of interior noise levels. On the other hand, passengers' comfort and market demands stimulate any annoying noise inside the vehicle compartment to be suppressed. These two contradictory trends encourage researchers to develop new efficient methods of analysis of vehicle interior noise that could be used on a design stage. As has been mentioned in Reference 2, the main sources of vehicle interior noise are engine and transmission system, road excitation, and aerodynamic excitation. The resultant noise is dependent not only on the exciting forces, but also on vibration characteristics of the car body structure and on acoustic properties of the passenger compartment which acts as an amplifier for the disturbances which characteristic frequencies are close to compartment's resonant frequencies.

Because of the energy exchange between the air and the structure in a vehicle compartment, the dynamic behavior of each of these sub-systems is influenced by the other. In other words, the interaction or coupling between air and structure alters their dynamic characteristics, and this determines the complexity of vehicle interior noise analysis. Fluid-structure interaction has always been a major research topic in acoustics.[5-9] The existing analytical solutions for cavities with simple geometries provide a great opportunity for an explicit physical interpretation and understanding of fluid-structure interaction. However, analysis of irregular cavities, such as car compartments, still challenges researchers and requires new investigations. In this case the inability of deriving analytical solutions leads to alternative, either experimental or numerical approaches in treatment of the problem. In this regard, finite element analysis combined with experimental validation represents a very powerful tool.[1,10-12] Studying fluid-structure interaction by finite element analysis enables many engineering problems to be solved. In the same time it reveals areas for further examination of the subject. In the low-frequency range the finite element method (FEM) operates with a reliable precision, and it is widely used in the structural-acoustic analysis of vehicle compartments.[1] Modern finite element programs perform structural-acoustic analysis and provide the acoustic pressure response at any point in the considered acoustic domain. Although the ability to take structural-acoustic coupling into account is a great advantage of FEM, the effects of complicated structural part of the system may cause significant distortions of the results of structural-acoustic analysis. In this case a simplification of the structural model may be a suitable option before performing finite element calculations.

The use of simplified and reduced scale vehicle models for theoretical and experimental investigations of structure-borne interior noise has been described in References 3,4. Such models are useful for understanding the physics of the problem and for simulation of the main features of roal vehicles. In particular, the QAUSICAR (QUArter Scale Interior Cavity Acoustic Rig) has been designed in Loughborough University to replicate a 1/4 scale massively simplified model of a passenger car compartment and to verify the analytical approach developed in Reference 3. Investigations in Reference 4 included separate experimental measurements of acoustic, structural, and structural-acoustic responses due to an external dynamic force imitating the effect of road irregularities.

The aim of the present paper is to present the results of finite element analysis of structural-acoustic phenomena in the above-mentioned reduced-scale model (QUASICAR) and its modifications and to compare the obtained numerical results with the analytical and experimental ones. The analysis reported in the present paper has been carried out using a new code MSC.NASTRAN-Acoustic that has been developed in Patran Command Language (PCL) specifically for the purposes of this research.

2 STRUCTURAL MODES

The first stage of the investigation included finite-element analysis of the basic structural element of QUASICAR which represents a single curved steel plate of 1.2 mm thickness simulating vehicle compartment (Fig.1). The above-mentioned curved plate was attached to massive wooden side walls of QUASICAR (not shown on Fig.1) implementing simply supported boundary conditions. For more detailed information see Reference 4.

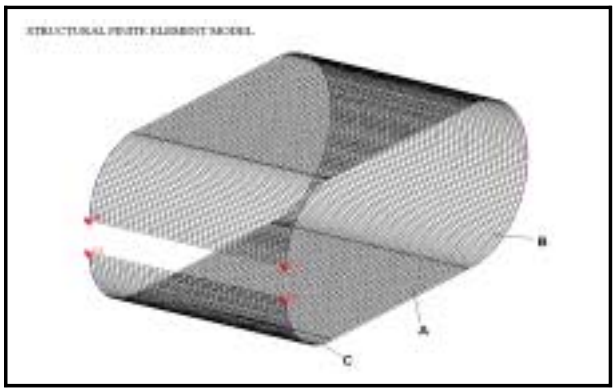

Fig. 1 Structural model.

The numerical structural analysis of QUASICAR included determination of the spatial patterns and natural frequencies of free vibrations of the structure. The governing equation of motion can be written in the form

$$[M^s]\{\ddot{u}\} + [K^s]\{u\} = 0\,, \tag{1}$$

where $[K^s]$ and $[M^s]$ are respectively the stiffness and mass matrices, $\{u\}$ is the vector of the nodal displacements. Assuming a time-harmonic solution

$$u_i = \phi_i \cos(\omega t)\,, \tag{2}$$

one can arrive to the linear eugen value problem

$$[K^s - \omega_i^2 M^s]\{\phi\}_i = 0 \quad i=1,2,\ldots \tag{3}$$

where $\{\Phi\}_i$ is vector of the normal modes. Further details about FEM can be found in Reference 12. As a result of structural symmetry of the curved plate under consideration, all normal modes are divided into two groups: symmetric and anti-symmetric modes.

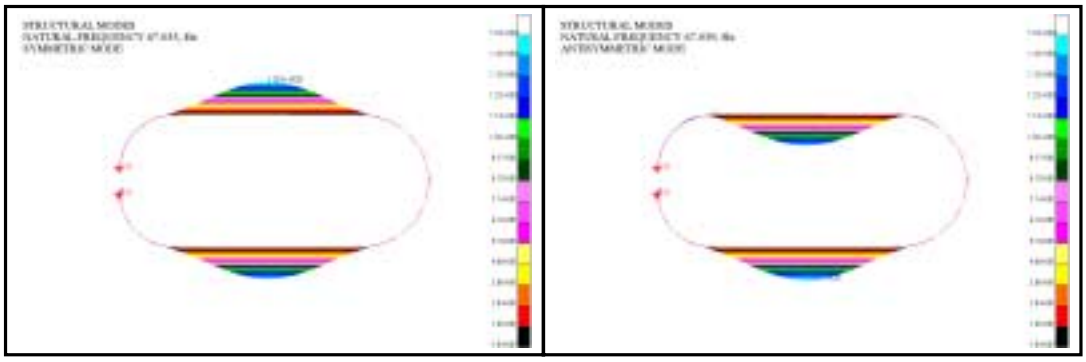

Fig. 2 Symmetric and anti-symmetric modes of the structure

The FEM analysis of normal modes has been performed for the first 30 natural frequencies of the above-mentioned curved plate. For validation purposes, FEM calculations have been carried out also for a simply supported rectangular plate for which analytical theory is available. The FE model of the curved plate had in total 68101 nodes and 67500 isomesh QUAD4 surface elements, and the FE model of the rectangular plate consisted of 12221 nodes and 12000 isomesh QUAD4 surface elements.

3 ACOUSTIC MODES

The acoustic modal characteristics of an arbitrary cavity can be obtained by solving Helmholtz equation:

$$\nabla^2 p + \left(\frac{\omega}{c}\right)^2 p = 0\,, \qquad (4)$$

where p is acoustic pressure within the cavity, ω is frequency of vibration, and c is the speed of sound. It is well known that normal modes of simple cavities, such as rectangular or cylindrical enclosures, can be derived analytically. However, for arbitrary cavities the only way of solving Helmholtz equation is by using numerical methods. In the FEM, a normal mode analysis of this problem can employ equation (3) as well. However, in this case mass and stiffness matrices are denoted as acoustic mass matrix $[M^a]$ and acoustic stiffness matrix $[K^a]$. More details are available in the book 12. It is interesting to make a comparison between numerically derived natural frequencies of the irregular cavity and natural frequencies calculated using the well-known analytical formulae for a rectangular enclosure having the same volume and close linear dimensions: L_x, L_y, L_z (see Reference 4).

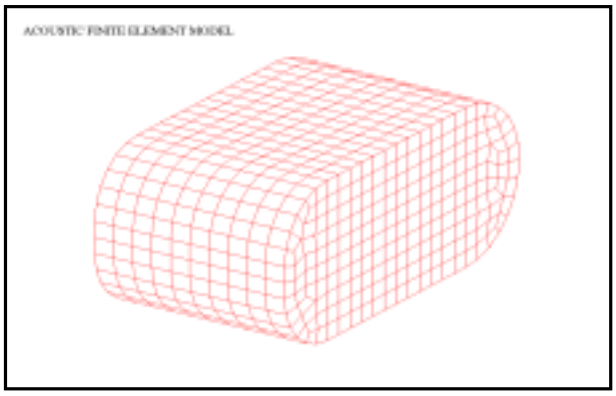

Fig. 3 Acoustic model.

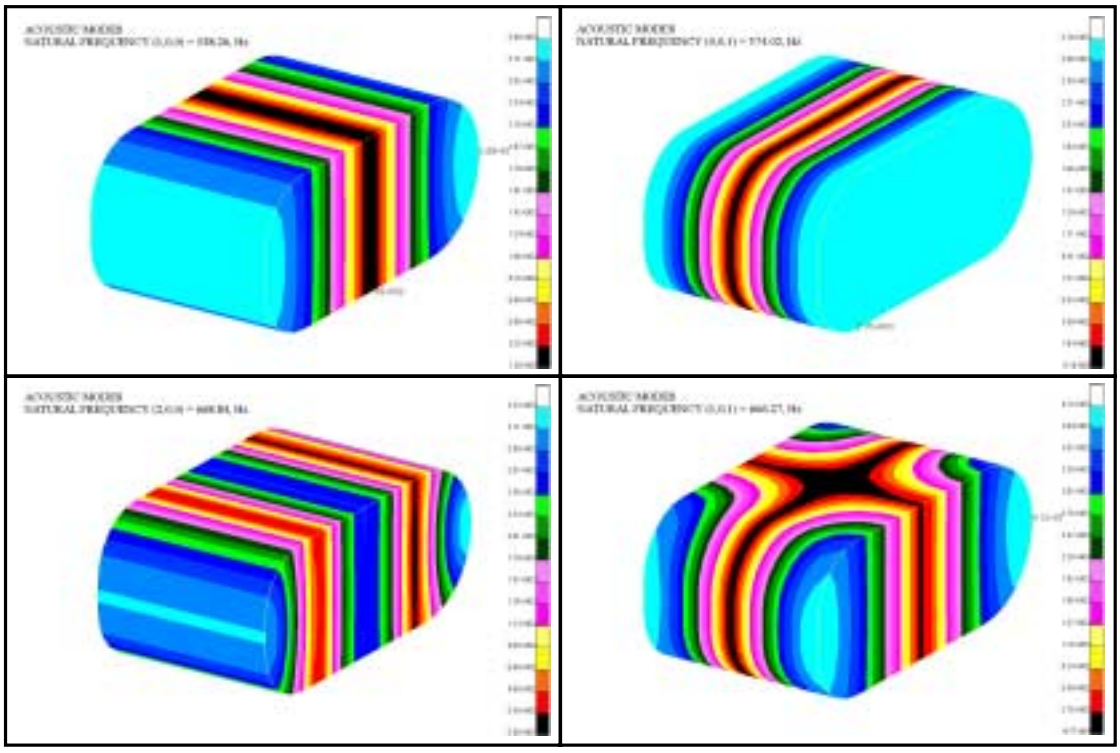

Fig. 4 QUASICAR's first acoustic modes.

In the acoustic analysis of the QUASICAR cavity 1970 HEXA acoustic elements and 2464 nodes were used, with pressure as a degree of freedom. The cavity was modelled as a solid with zero shear modulus and with other characteristics being physical parameters of the air (ρ=1.2 kgm^{-3} and c=343 ms^{-1}). The mesh size was consistent with the wavelength $\lambda=c/f_{i,j,k}$=0.343 m at the highest frequency of interest. We recall that QUASICAR is 1/4 reduced scale model. This is why 1000 Hz was the maximum natural frequency of interest, which corresponds to 250 Hz for a real car.

4 COMPARISON BETWEEN NUMERICAL, ANALYTICAL AND EXPERIMENTAL RESULTS

The experiments have been carried out in the Noise and Vibration Laboratory at the Department of Aeronautical and Automotive Engineering at Loughborough University. The measurement data were recorded using a HP 3566 FFT analyzer. For structural tests, the excitation signal was provided by an electromagnetic shaker, and for acoustic tests - by a miniature loudspeaker.[4]

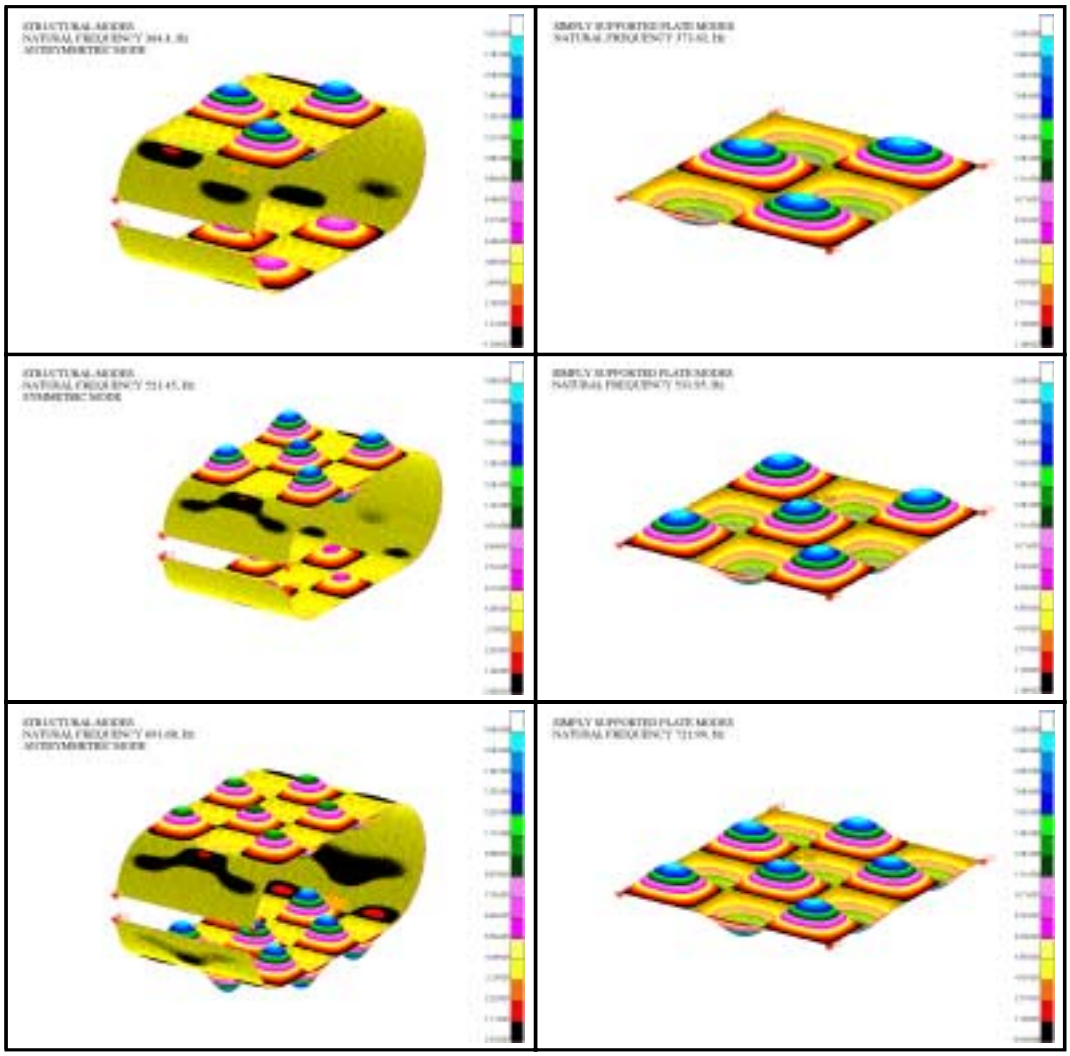

Fig. 5 Structural modes of QUASICAR (left) and of a rectangular plate (right).

4.1 Discussion of the results of structural investigation.

QUASICAR structure can be considered as a combination of simple structures: plates **A** and shells **B** and **C** (see Fig. 1). Table 1 shows natural frequencies of the simply supported rectangular plate (Columns 1, 2) and of the QUASICAR model (Columns 4, 5). The corresponding spatial patterns are shown on Fig. 5. The two plates **A** of the QUASICAR have the lowest stiffness and consequently the lowest fundamental frequency in this combination. The analysis of the individual sections shows that the first resonance peak of the two plates **A** is at 67.035 Hz (67.039 Hz– for anti-symmetric mode), the half of a circular shell **B** - 906.04 Hz, and the two quarters of a circular shell **C** – 1271.40 Hz. Bearing in mind the low-frequency range of interest for this research (up to 1000 Hz - corresponding to 250 Hz for a real vehicle) and noticing that resonant frequencies of curved parts are above 900 Hz, it is reasonable to approximate the normal modes of QUASICAR by the normal modes of a simply supported rectangular plate having the dimensions of the QUASICAR flat sides (see Fig. 5).

№	Simply supported plate, natural freq., Hz			FE struct. natural freq., Hz	Exp. struct. natural freq., Hz	Acoust. natural freq. of a rectang., Hz		FE acoust. natural freq., Hz	Exp. acoust. natural freq., Hz
	1		2	3	4	5		6	7
	Analytical		FE						
1.	(1,1)	59.04	59.18	67.035	-	(1,0,0)	345.88	338.26	360.00
2.	-	-	-	67.039	-	(0,1,0)	571.86	574.02	582.00
3.	(1,2)	140.54	140.89	146.22	-	(1,1,0)	668.32	666.27	-
4.	-	-	-	146.23	-	(0,0,1)	686.23	668.84	685.00
5.	(2,1)	154.68	155.10	157.67	-	(2,0,0)	691.76	718.96	-
6.	-	-	-	157.67	-	(1,0,1)	768.47	839.64	-
7.	(2,2)	236.18	236.62	239.15	231.00	(0,1,1)	893.27	881.39	894.00
8.	-	-	-	239.15	-	(2,1,0)	897.53	920.00	-
9.	(1,3)	276.36	277.12	264.51	265.00	(1,1,1)	957.90	985.49	-
10.	-	-	-	264.52	270.00	(2,0,1)	974.39	1017.10	980.00
11.	(3,1)	314.08	314.99	315.33	281.00	(3,0,0)	1037.64	1054.90	-
12.	-	-	-	315.33	297.00	(2,1,1)	1129.81	1140.50	-
13.	(2,3)	372.00	372.62	364.40	342.00	(0,2,0)	1143.71	1162.20	1147.00
14.	-	-	-	364.40	-	(3,1,0)	1184.79	1200.90	-
15.	(3,2)	395.58	396.29	394.69	385.00	(3,0,1)	1244.03	1210.40	1207.00
16.	-	-	-	394.69	-	(0,2,1)	1333.79	1280.40	-
17.	(1,4)	466.51	467.81	415.13	451.00	(3,1,1)	1369.17	1318.20	-
18.	-	-	-	415.13	-	(0,0,2)	1372.46	1340.90	-
19.	(3,3)	531.40	531.95	521.45	523.00	(1,2,1)	1377.91	1366.60	-
20.	-	-	-	521.45	-	(4,0,0)	1383.53	1403.20	1407.00
21.	(4,1)	537.25	538.77	529.53	545.00	(4,1,0)	1497.05	1432.80	-
22.	-	-	-	529.54	-	(1,1,2)	1526.53	1433.80	1521.00
23.	(2,4)	562.15	563.07	538.04	-	(4,0,1)	1544.36	1437.70	-
24.	-	-	-	538.04	-	(4,1,1)	1646.84	1486.00	1645.00
25.	(4,2)	618.74	619.85	601.92	-	(0,3,0)	1715.57	1523.80	-
26.	-	-	-	601.93	-	(5,0,0)	1729.41	1543.50	1750.00
27.	(1,5)	710.98	712.91	615.62	652.00	(5,1,0)	1821.50	1569.60	-
28.	-	-	-	615.62	-	(0,3,1)	1847.73	1593.00	1847.00
29.	(3,4)	721.55	721.99	691.67	700.00	(5,0,1)	1860.58	1593.30	-
30.	-	-	-	691.68	-	(1,3,1)	1879.82	1626.10	1872.00

Table 1. Natural frequencies of QUASICAR and of a rectangular plate

Resonance frequencies of the curved plate (a coupled structure) and of the uncoupled flat plates **A** agree well in the frequency range considered. The results show that the natural frequencies of the coupled model are higher for the first four normal modes and lower for the rest of the modes, as compared to the resonance peaks of the uncoupled simply supported plate. In the first case the influence of the shells **B** and **C** on the plates **A** can be likened to attached masses, which increase the natural frequencies in comparison with a simply supported plate. In the second case their influence can be likened to attached springs which decrease the natural frequencies. The above results demonstrate that in the frequency range below 900 Hz, the predominant influence of the flat plates **A** makes it possible to approximate the modal characteristics of QUASICAR by those for a simply supported flat plate.

The analysis of the experimental data (Table 1, Column 4) shows some disagreement with the numerical results (Table 1, Column 3). First of all, it was difficult to excite all natural frequencies. The experimental tests covered a frequency spectrum from 231 to 700 Hz. In the low-frequency range, between 230 and 350 Hz, it can be noticed that there is a large number of natural frequencies that do not correspond to those obtained from the numerical and analytical calculations. This can be explained by the presence of symmetric and anti-symmetric natural modes which correspond to different but relatively close natural frequencies. Note that these normal modes were excited by an anti-symmetric load (one shaker acting on the bottom plate of QUASICAR). In this way the experimental tests could not simulate the symmetric and anti-symmetric modes in a proper way. In the region between 350 and 700 Hz the measured natural frequencies correspond to one of the groups: symmetric or anti-symmetric natural modes. As a reason for disagreement between experimental and numerical data in the whole range of frequencies one can point out also the differences between the FE model and the real test rig, e.g. the unaccounted influence of masses of the accelerometers, imperfections in the boundary conditions, etc. In spite of these disagreements, the experimental analysis validates to some extent the numerical and analytical results and brings new ideas for further improvements of the experimental tests.

4.2 Discussion of the results of the acoustic investigation.

The analysis of the acoustic data (Table 1, Columns 5, 6, 7) shows a good agreement between analytical, numerical and experimental results in the range up to 1000 Hz. This implies that the use of the well known analytical formulae for a rectangular enclosure is the easiest way for a quick verification of numerical or experimental results. Above 1000 Hz the precision of the numerically determined natural frequencies is deteriorated, which is due to a smaller number of finite elements per wavelength. The differences between measured and numerically calculated acoustic natural frequencies may be partly explained by the unaccounted rectangular gap in the left curved part of QUASICAR.

5 MODIFIED MODELS OF QUASICAR

The initial QUASICAR model has been designed as a massively simplified model of a road vehicle. One of the reasons for such a simplification was the possibility to estimate the interior sound pressure in QUASICAR by approximate analytical formulae. Keeping in mind the above-mentioned discrepancies between numerical and experimental results, the modified models of QUASICAR have been developed and analysed by means of numerical techniques to eliminate some weaknesses of the original model and to simulate more accurately the main characteristics of road vehicles. Two modified models have been considered: the first (model ***M1***) has a different thickness of the bottom plate, and the second (model ***M2***) employs different boundary conditions.

5.1 Modified model *M1* - different thickness of the bottom plate.

The geometry and the boundary conditions of the model ***M1*** are the same as those shown in Fig. 1. The only difference is the dimensions of the bottom plate that was modeled as having 6.0 mm thickness. In this way the symmetry in respect of the bottom and top parts of QUASICAR has been broken, which corresponds more realistically to the case of real road vehicles. In the FEM a normal mode analysis was performed for the first 20 normal modes, and the FE model employed in total 10,287 nodes and 10,000 isomesh QUAD4 surface elements.

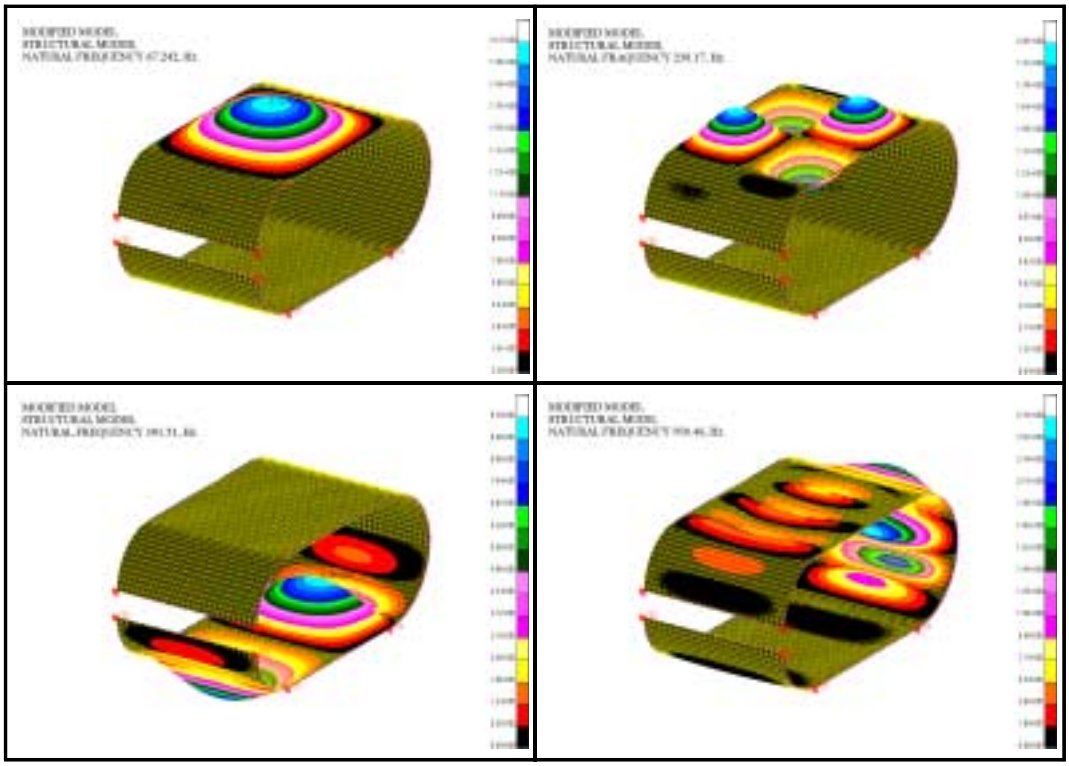

Fig. 6 Structural modes of the modified model *M1* .

Comparing the normal modes (Fig.6) and natural frequencies (Table 2, Column 1 and 3) of the modified model ***M1*** with those of QUASICAR, one can notice some interesting facts. First of all, the predominant normal modes belong to one of the main parts of the model: the bottom plate, the top plate or the curved part, and only in certain modes, in the considered frequency range from 0 to 1000 Hz, all three panels are involved. The distinct normal modes are associated with the different stiffness of the panels, while their geometrical forms remain the same. Thereby the simplification of complex structures is possible on the base of the material and geometrical characteristics of their main parts. Secondly, in spite of the change of the model (increase in weight), the fundamental natural frequencies remain the same. They are defined by the top plate, which has the lowest stiffness and was unchanged after the modification. Except for the first three natural frequencies, the other frequencies do not match well and go down compared with QUASICAR natural frequencies. The difference between both sets of natural frequencies, of course, was expected and reflects the influence of the additional weight and stiffness of the bottom plate. Suppressing the participation of the bottom plate in the formation of normal modes is another important feature demonstrated here. In the frequency range between 0 to 1000 Hz the bottom plate takes part only in the five normal modes: at 224.37 Hz, 391.51 Hz, 653.34 Hz, 682.27 Hz, and 844.27 Hz, whereas in QUASICAR model the bottom plate plays the same role as the top one. The Modified model ***M1,*** which is closer to real road vehicles, demonstrates some useful ideas for controlling the vibration behavior of the panels and in the same time keeps the calculations simple.

5.2 Modified model *M2* – different boundary conditions.

The changes incorporated into the model ***M2*** have been determined with a view of a proper representation of a typical car body construction. The simply supported boundary conditions of QUASICAR model were replaced by beams with a circular cross section of radius $R = 10$ mm. The bottom plate was stiffened by means of two beams in transverse and longitudinal directions, which represents the platform of a car. The only boundary conditions were imposed at the ends of the longitudinal beams: the constraints in X, Y and Z directions were applied at the relevant nodes. These simulated higher stiffness of the bottom part and of the edges of a car body, as well as a fully stiff suspension. In the FEM a normal mode analysis was performed for the first 20 normal modes and frequencies, and the FE model employed 1584 isomesh QUAD4 surface finite elements, 340 BAR beam finite elements and 1735 nodes.

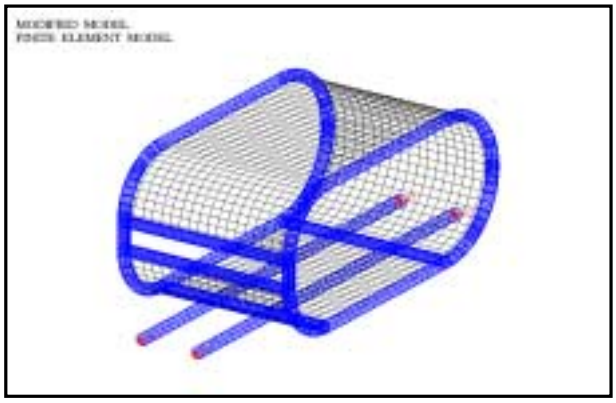

Fig. 7 Structure of simplified model *M2*

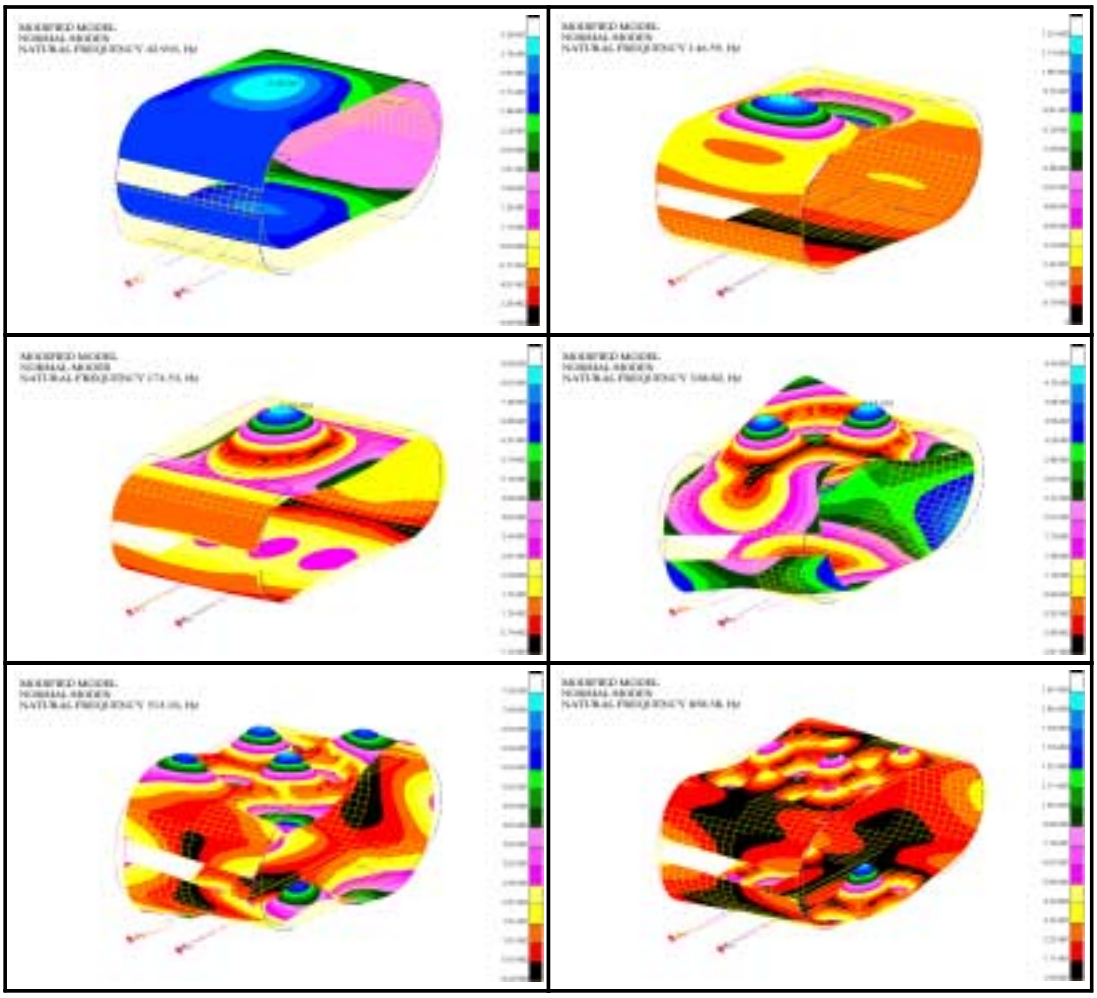

Fig. 8 Structural modes of the modified model *M2*

The results of the normal modes analysis are shown in Fig. 8 and Table 2, Column 2. The first four natural frequencies correspond to displacements of the modified model which are due to longitudinal beams (the lowest stiffness in the model). The first normal mode, which corresponds to the fundamental frequency of QUASICAR model, appears at a higher frequency, 93.019 Hz. This was expected due to the increase of stiffness characteristics as a result of adding beam elements. The analysis of this model outlines the complexity of structural simplification of a car body. From Fig. 8 it can be seen that the spatial patterns of vibrations are a mixture of spatial patterns due to a simply supported rectangular plate and spatial patterns caused by a greater degree of freedom of the model. However, the main location of structural vibrations remains the same - the panel with the lowest stiffness, namely the top plate of the modified model ***M2***.

№	Model ***M1***, structural natural frequencies, Hz	Model ***M2***, structural natural frequencies, Hz	QUASICAR, structural natural frequencies, Hz	Structural-acoustic interaction model, natural frequencies Hz	QUASICAR, acoustic natural frequencies, Hz	
	1	2	3	4	5	
1.	67.242	15.310	67.035 67.039	67.909 76.488		
2.	146.74	42.903	146.22 146.23	148.61 148.97		
3.	157.69	63.063	157.67 157.67	156.47 156.59		
4.	224.37	81.342	239.15 239.15	237.71 237.77		
5.	239.17	93.019	264.51 264.52	270.03 270.44		
6.	265.50	138.92	315.33 315.33	311.98 312.25		
7.	315.10	146.59		338.59	(1,0,0)	338.26
8.	364.37	166.56	364.40 364.40	362.63 362.70		
9.	391.51	174.53	394.69 394.69	386.57 386.83		
10.	393.81	192.33	415.13 415.13	421.29 421.90		
11.	416.25	240.51	521.45 521.45	505.64 505.67		
12.	519.43	273.76	529.53 529.54	527.01 527.13		
13.	529.20	283.64	538.04 538.04	532.27 532.93		
14.	537.51	338.82		575.89	(0,1,0)	574.02
15.	603.27	372.81	601.92 601.93	602.78 602.96		
16.	613.52	378.62	615.62 615.62	608.83 608.90		
17.	653.34	396.35	691.67 691.68	666.55 666.57		
18.	682.27	400.00		667.06	(1,1,0)	666.27
19.	688.00	414.94		669.41	(0,0,1)	668.84
20.	731.36	421.26	732.53 732.55	711.94 711.97		

Table 2 Numerical results for modified models and structural-acoustic interaction in QUASICAR

6 STRUCTURAL-ACOUSTIC COUPLING IN QUASICAR MODEL.

Interaction or coupling between an enclosed fluid (air) and a structure means their mutual influence on the dynamic behavior of each other. The fluid acts via its pressure on the structural surface, and in the same time it is influenced by the normal displacements of the structure.[13,14] Thus, fluid pressure on the surface is considered as a disturbing force in the governing equations of motion of the structure and the normal accelerations of the structural surface enter into the Helmholtz equation via 'flexible wall' boundary conditions. Coupling of these equations leads to a single governing matrix equation for the whole system structure-fluid. In the FEM a normal mode analysis has been performed for the first 20 natural frequencies. The structural-acoustic model had in total 2170 acoustic HEXA and 540 structural QUAD4 finite elements. The total number of nodes was 3311 of which 605 were on the interface.

6.1 Theoretical background – finite element formulation.

The discretisation of the acoustic field in finite elements leads to the following equations for sound pressure in matrix form[1]:

$$[M^a]\{\ddot{p}\}+[K^a]\{p\}=\{l\}. \tag{5}$$

Here {p} is vector of the *m* nodal sound pressure at each fluid point; $[M^a]$ and $[K^a]$ are the *mxm* acoustic mass and stiffness matrices, and {l} is the vector of generalized forces applied to the fluid over the element surface S_i. The structural equation of motion in the case of structural-acoustic interaction can be written in matrix form as follows:

$$[M^s]\{\ddot{u}\}+[K^s]\{u\}=[S]\{p^b\} \tag{6}$$

where {u} is vector of the *n* structural displacements, $[M^s]$ and $[K^s]$ are the *nxn* structural mass and stiffness matrices, $\{p^b\}$ is vector of sound pressures at the boundary grid points, and [S] is a sparse *nxm* structural-acoustic coupling matrix which elements are determined from the surface area S_{ij} for the boundary grid point corresponding to the structural displacement u_i and the associated sound pressure at that point p_j.

For the purpose of free vibration analysis, the governing equations of the acoustic and structural part, respectively Eqs. (5) and (6), are derived with the damping matrix and the vector of the external sources of disturbance being ignored. Then the governing equations of the structural-acoustic coupling model can be written in the following form:

$$\begin{bmatrix} [M^s] & [0] \\ [M^{as}] & [M^a] \end{bmatrix}\begin{Bmatrix} \{\ddot{u}\} \\ \{\ddot{p}\} \end{Bmatrix}+\begin{bmatrix} [K^s] & [K^{sa}] \\ [0] & [K^a] \end{bmatrix}\begin{Bmatrix} \{u\} \\ \{p\} \end{Bmatrix}=0, \tag{7}$$

where $[M^{as}]=\rho c^2[S]^T$ and $[K^{sa}]= - [S]$.

6.2 Results and discussion.

In the structural-acoustic coupling analysis we consider in detail the coupling of the first rigid-wall acoustic mode at 338.26 Hz with different structural modes 'in vacuo'. The natural frequencies of a coupled model are generally different from the individual uncoupled parts. The vibration energy of the coupled mode is divided between structural and fluid vibrations and is equal to the sum of the vibration energies of the uncoupled modes. Thus, some of the coupled modes can be determined as "acoustic" or "structural", which means that most of the total energy in this mode is associated respectively with fluid or structural vibration. In this respect, from the results shown in Tabl.2,

Column 3, 4, and 5, one can distinguish “acoustic” and “structural” modes of the coupled model. For weakly coupled systems the natural frequencies of such modes are quite close to those of the individual fluid and structural parts. Usually the coupling between acoustic and structural modes depends on their spatial similarity and frequency closeness. The spatial patterns of QUASICAR structure are two-dimensional; this means that structural modes will correspond best to the acoustic modes in the area of the relevant two-dimensional acoustic spatial patterns. Fig.9 shows the normal modes of the coupled model affected by the first rigid-wall acoustic mode. The acoustic uncoupled mode at 338.26 Hz and with (1,0,0) spatial pattern influences some structural modes with spatial patterns (2,3) at 394.69 Hz, and (4,1) at 415.33 Hz. Comparing the coupled modes at 386.83 Hz and at 421.90 Hz, one can notice that the better matching of the structural and acoustic spatial patterns in the latter mode, in spite of its remoteness from the rigid-wall frequency, leads to a more distinctive picture of the coupling rather than for the previous normal mode. In respect of the individual modal characteristics, a structural mode will couple more efficiently to acoustic modes which have resonance frequencies close to the structural resonances. QUASICAR has relatively distant acoustic and structural resonances. For example, the closest structural resonance peaks to the first acoustic resonance at 338.26 Hz are 315.33 Hz and 364.40 Hz, which determines a relatively weakly coupled system with natural frequencies close to the uncoupled resonance frequencies.

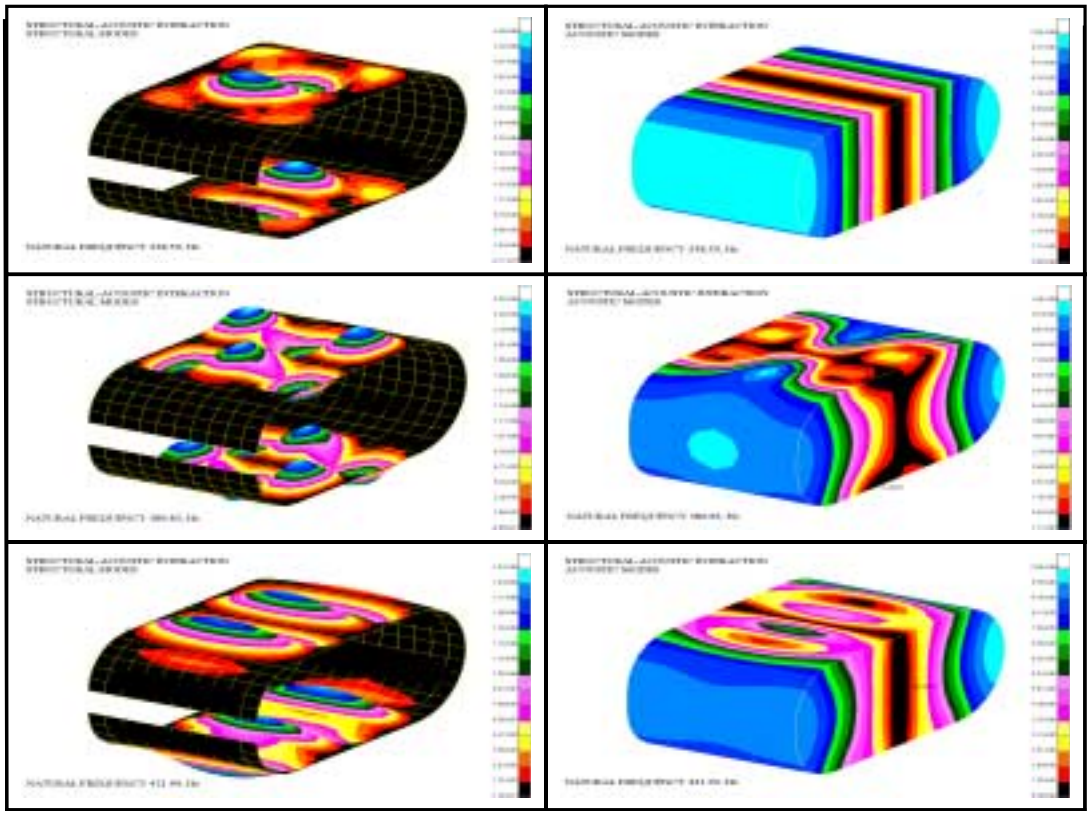

Fig. 9 Structural-acoustic coupling in QUASICAR model.

Another interesting point is a great alteration of the fundamental frequency of the coupled model. As was pointed out in Reference 14, this phenomenon is due to a strong coupling of the first structural mode with the zero-order acoustic mode (0,0,0) having zero natural frequency. Usually, the first cavity resonance frequency is above the fundamental structural frequency and coupling effects occur at frequencies above the first acoustic resonance, except for this case when the coupling occurs at frequency lower than the first acoustic peak. In this connection, we recall that QUASICAR has two groups of natural frequencies: symmetric and anti-symmetric. Finite element analysis shows that only symmetric modes can couple efficiently with the acoustic modes. This is because in anti-symmetric structural modes the fluid inside the cavity moves as a rigid body and does not

exhibit vibration behavior. The influence of fluid on structural vibrations in anti-symmetric modes is also less pronounced than in the case of symmetric modes. This is why natural frequencies of symmetric and anti-symmetric structural modes in a coupled model have greater differences than in the case of the same structural modes in an uncoupled model, particularly for the fundamental modes.

7 CONCLUSIONS

In the present paper we have reported the results of the FEM structural-acoustic analysis of a simplified vehicle model QUASICAR. Initially, the structural and acoustic calculations were carried out separately, and then a fully coupled model was studied. In the uncoupled model, the normal modes of the structure and acoustic modes of the enclosure were calculated. It was found that in the low frequency range structural vibrations of QUASICAR can be approximated by those of simply supported plates corresponding to the flat parts of the structure. The proposed modified models of QUASICAR gave an additional point of view on understanding the complex structural behaviour of the car body. In the coupled model of QUASICAR the interaction between structure and air has been studied. It was found that QUASICAR can be considered as a weakly coupled model because of the significant differences between structural and acoustic natural frequencies. It was pointed out that spatial similarity between structural and acoustic normal modes is a prerequisite for a better coupling even if the structural and acoustic natural frequencies do not match well.

8 REFERENCES

1. D.J. Nefske, J.A. Wolf, and L.J. Howell, “Structural-acoustic finite element analysis of the automobile passenger compartment: A review of current practice”, J. Sound Vib., **80**(2), 247-266, (1982).
2. S.K. Jha, “Characteristics and sources of noise and vibration and their control in motor cars”, J. Sound Vib., **47**(4), 543-558, 1976.
3. V.V. Krylov, “Simplified analytical models for prediction of vehicle interior noise”, Proceeding of the International Conference on Noise and Vibration Engineering, (ISMA 2002), Leuven, Belgium, Ed. P. Sas, vol. V, p. 1973-1980, (2002).
4. V.V. Krylov, S.J. Walsh, and R.E.T.B. Winward, “Modelling of vehicle interior noise at reduced scale”, Euronoise, Naples,2003
5. R.H. Lyon, “Noise reduction of rectangular enclosures with one flexible wall”, J. Acoust. Soc. Am., **35**, 1791-1797, (1963).
6. E.H. Dowell and H.M. Voss, “The effect of a cavity on panel vibration”, AIAA J., **1**, 476-477, (1962).
7. E.H. Dowell, G.F. Gorman, and D.A. Smith, “Acoustoelasticity: General theory, acoustic natural modes and forced sinusoidal excitation, including comparisons with experiments”,J. Sound Vib., **52**, 519-542, (1977).
8. A.J. Pretlove, “Free vibrations of a rectangular panel backed by a closed rectangular cavity”, J. Sound Vib., **2**(3), 197-209, (1965).
9. A.J. Pretlove, “Forced vibrations of a rectangular panel backed by a closed rectangular cavity”, J. Sound Vib., **3**(3), 252-261, (1966).
10. G.C. Everstine, “Structural analogies for scalar field problems”, Int. J. Numer. Meth. Engng., **17**, 471-476, (1981).
11. M. Petyt, J. Lea, and G.H. Koopmann, “A finite element method for determining the acoustic modes of irregular shaped cavities”, J. Sound Vib., **45**(4), 495-502, (1976).
12. M. Petyt, “Introduction to finite element vibration analysis”, Cambridge University Press, (1990).
13. M.C. Junger, and D. Feit, “Sound, structure and their interaction”, MIT Press Cambridge, MA, (1972).
14. F. Fahy, “Sound and structural vibration”, London, Academic Press, (1985).