Loughborough University

This item was submitted to Loughborough University as a PhD thesis by the author and is made available in the Institutional Repository (https://dspace.lboro.ac.uk/) under the following Creative Commons Licence conditions.

creative commons

COMMONS DEED

Attribution-NonCommercial-NoDerivs 2.5

You are free:

- to copy, distribute, display, and perform the work

Under the following conditions:

Attribution. You must attribute the work in the manner specified by the author or licensor.

Noncommercial. You may not use this work for commercial purposes.

No Derivative Works. You may not alter, transform, or build upon this work.

- For any reuse or distribution, you must make clear to others the license terms of this work.
- Any of these conditions can be waived if you get permission from the copyright holder.

Your fair use and other rights are in no way affected by the above.

This is a human-readable summary of the Legal Code (the full license).

Disclaimer

For the full text of this licence, please go to:
http://creativecommons.org/licenses/by-nc-nd/2.5/

BLLIDNO:- D 51280/84

LOUGHBOROUGH
UNIVERSITY OF TECHNOLOGY
LIBRARY

AUTHOR/FILING TITLE
HANCOX, P J

ACCESSION/COPY NO.
004954/02

VOL. NO.

CLASS MARK
LOAN COPY

-4. JUL. 1986

000 4954 02

ON THE MACHINE TRANSLATION OF STRING INDEXING LANGUAGES BETWEEN ENGLISH AND FRENCH USING PRECIS AS AN EXAMPLE

Volume two - appendices

by

Peter Hancox

A Doctoral Thesis
Submitted in partial fulfilment of the requirements
for the award of
Doctor of Philosophy
of the
Loughborough University of Technology
November 1983

© by Peter John Hancox 1983

Loughborough University
of Technology Library
Date June 84
Class
Acc. No. 004954/02

CONTENTS

Appendix		Page
A	CHARACTER SET	1
B	SAMPLE OF ENGLISH PRECIS DRAWN FROM BLAISE	4
C	ENGLISH ANALYSIS/SYNTHESIS DICTIONARY	49
D	ENGLISH-FRENCH TRANSFER DICTIONARY	81
E	FRENCH ANALYSIS/SYNTHESIS DICTIONARY	109
F	FRENCH STRINGS PRODUCED BY THE MT SYSTEM	146
G	PROGRAM MT11C1 (TEXT PREPARATION)	189
H	PROGRAM MT21C1 (SYNTACTIC ANALYSIS)	200
I	PROGRAM MT25C1 (SEMANTIC ANALYSIS 1)	219
J	PROGRAM MT27C1 (SEMANTIC ANALYSIS 2)	238
K	PROGRAM MT29C1 (SEMANTIC ANALYSIS 3)	259
L	PROGRAM MT31C1 (TRANSFER)	270
M	PROGRAM MTGCT1 (CONTRACT GRAMMAR)	287
N	PROGRAM MT41C1 (GENERATION 1)	292
O	PROGRAM MT43C1 (GENERATION 2)	336
P	PROGRAM MT45C1 (CREATION OF TL STRINGS)	377
Q	ERROR MANUAL	393

APPENDIX A

CHARACTER SET

The Digico M28 uses the ASCII code. This did not allow the range of diacritical marks required, and some improvisation was called for. The following were used to represent accents at input, and were placed after the character to which they belonged.

acute	/	character 47
cedilla	,	character 44
circumflex	^	character 94
grave	\	character 92
umlaut	"	character 34

All hardcopy for this project was produced on Qume daisywheel printers, using two printwheels. The names and character set of these wheels is given below.

Multi Courier 10 (82068)

No.	Char	No.	Char	No.	Char	No.	Char	No.	Char
33	!	34	"	35	#	36	$	37	%
38	&	39	'	40	(	41	)	42	*
43	+	44	,	45	-	46	.	47	/
48	0	49	1	50	2	51	3	52	4
53	5	54	6	55	7	56	8	57	9
58	:	59	;	60	`	61	=	62	¨
63	?	64	Æ	65	A	66	B	67	C
68	D	69	E	70	F	71	G	72	H
73	I	74	J	75	K	76	L	77	M
78	N	79	O	80	P	81	Q	82	R
83	S	84	T	85	U	86	V	87	W
88	X	89	Y	90	Z	91	µ	92	½
93	ß	94	^	95	_	96	°	97	a
98	b	99	c	100	d̄	101	e	102	f
103	g	104	h	105	i	106	j	107	k
108	l	109	m	110	n	111	o	112	p
113	q	114	r	115	s	116	t	117	u
118	v	119	w	120	x	121	y	122	z
123	ç	124	æ	125	§	126	´	127	

Prestige Elite Bilingual 12 (82054)

No.	Char	No.	Char	No.	Char	No.	Char	No.	Char
33	!	34	"	35	#	36	$	37	%
38	&	39	'	40	(	41	)	42	*
43	+	44	,	45	-	46	.	47	/
48	0	49	1	50	2	51	3	52	4
53	5	54	6	55	7	56	8	57	9
58	:	59	;	60	`	61	=	62	¨
63	?	64	@	65	A	66	B	67	C
68	D	69	E	70	F	71	G	72	H
73	I	74	J	75	K	76	L	77	M
78	N	79	O	80	P	81	Q	82	R
83	S	84	T	85	U	86	V	87	W
88	X	89	Y	90	Z	91	[	92	½
93	]	94	^	95	_	96	°	97	a
98	b	99	c	100	d̄	101	e	102	f
103	g	104	h	105	i	106	j	107	k
108	l	109	m	110	n	111	o	112	p
113	q	114	r	115	s	116	t	117	u
118	v	119	w	120	x	121	y	122	z
123	ç	124	|	125	¾	126	´	127	

APPENDIX B

SAMPLE OF ENGLISH PRECIS DRAWN FROM BLAISE

	Page
Strings listed individually	5
Strings manipulated as an index	30

1
$z2103astronomy$2lamateur

2
$z2103astronomy

3
$z2103astronomy$z6003early works$z6003Latin-English parallel texts

4
$z2103astronomy$z6003for children

5
$z2103astronomy$z6003for schools

6
$z2103astronomy$z6003poems$z6003early works$z6003Latin-English parallel texts

7
$z2103astronomy$z2002$z3103projects

8
$z2103astronomy$z6003Welsh texts

9
$zl103disasters$2lcosmic

10
$zl103outer space

11
$zl103outer space$z6003for children$z6003Irish texts

12
$z2103astronomy$z6003tables

13
$z2103astronomy$z6003technical data

14
$z0003Great Britain$z2103astronomy$z6003career guides

15
$z2103astronomy$z6103astrology$01for

16
$z2103astronomy$z6003encyclopaedias

17
$z2103astronomy$2lamateur$z6003serials

18
$z2103astronomy$z6003for children$z6003serials

19
$z2103astronomy$z6003serials

20
$z0101Cambridgeshire$zp103Cambridge$z1003universities$z1032$zq103
University of Cambridge. Institute of Astronomy$z6003serials

21
$z2103astronomy$z6003questions & answers

22
$z2103astronomy$z6003programmed instructions

23
$z2103astronomy$z6003early works

24
$z2103astronomy$dca B.C.600- ca A.D.1750

25
$z2103astronomy$dto 1974

26
$z2103astronomy$dto 1976

27
$z2103astronomy$dto 1979

28
$z2103astronomy$2lancient

29
$z2103astronomy$dca B.C.2000- A.D.1543

30
$z2103astronomy$zs003influence$d1300-1500$vofwonz3103astrology

31
$z2103astronomy$dca 1540-1978

32
$z2103astronomy$d1900-1975

33
$z2103astronomy$dca 1950-1973

34
$z2103astronomy$dca 1950-1975

35
$z2103astronomy$d1968-1969

36
$z2103astronomy$dca 1500-ca 1720$z6003biographies

37
$z2103astronomy$z2002$z3103Herschel, Sir John, 1st bart$z6003
biographies

38
$z0103Netherlands$z2103astronomy$z2002$z31030ort, Jan Hendrik
$z6003festschriften

39
$z0103ancient world$z2103astronomy

40
$z0103ancient world$z2103astronomy$z6003conference proceedings

41
$z0003Europe$z2103astronomy$d1400-1650$z6003conference
proceedings

42
$z0103China$z2103astronomy$z6003serials

43
$z0103Japan$z2103astronomy$d600-1854$z2002$z3103cultural aspects

44
$z0103South Africa$z2103astronomy$dto 1976

45
$z0100America$zp103pre-Columbian America$z2103astronomy$z6003
conference proceedings

46
$z0100Mexico$zp103pre-Columbian Mexico$z2103astronomy$z6003
conference proceedings

47
$z2103astronomy$z3003theories$z6003early works

48
$z1103outer space$z3003theories$dto 1970

49
$z2103astronomy$z3003theories$dca 1500-1679

50
$z2103astronomy$zs003theoriesvofwof$z3103Copernicus, Nicolaus

51
$z2103astronomy$zs003theoriesvofwof$z3103Copernicus, Nicolaus
$z6003conference proceedings

52
$z2103astronomy$zs003theoriesvofwof$z3103Copernicus, Nicolaus
$z6003Polish texts

53
$z2103mechanics$21celestial$zs003theories$vofwofz3103Galilei,
Galileo

54
$z1103astronomical bodies$z2103orbits

55
$zl103astronomical bodies$zp103orbits$z2103calculation

56
$zl103planets$zp103orbits$z2103calculation$oKepler's laws$z2032
calculation of orbits of planets by Kepler's laws$zs003
applicationsvofwin$z3103digital computer systems

57
$zl103solar system$zp103origins

58
$zl103solar system$zp103origins$z6003conference proceedings

59
$zl103solar system$zl103planets$z2103interactions$2lgravitational
$2lclose-range$vwith$wwith$zl103astronomical bodies

60
$zl103solar system$zp103planets$z2103motion$z3003theories$z6003
early works

61
$zl103solar system$zp103planets$zp103origins

62
$zl103solar system$zp103planets$z2103motion$2lretrograde

63
$zl103solar system$zp103planets$z2103tangential velocity$z3003
theories

64
$zl103solar system$z3003theories

65
$zl103solar system$z3003theorieswofzs003influence$dto 1978$vof
wonz3103exploration$2linterplanetary

66
$zl103solar system$zs003theoriesvofwof$zp103Hoerbiger, Hans

67
$zl103planets$zp103origins$z3003theories$dto 1977

68
$zl103Venus$zp103originswofzs003theoriesvofwof$z3103
Velikovsky, Immanuel$z6003critical studies

69
$zl103Venus$zp103originswofzs003theoriesvofwof$z3103
Velikovsky, Immanuel$z2042theories of Velikovsky, Immanuel of
origins of Venus$z2103criticism$dl950-1977

70
$zl103moon$z2103motion$z3003theories$z6003early works$z6003
facsimiles

71
$z1103moon$zp103origin$z3003theories

72
$z2103astronomy$z6003manuals

73
$z1103astronomical bodies$z2103observation$z6003amateurs' manuals

74
$z1103astronomical bodies$z2103observations$dto 1604$z2003
applications

75
$z2103astronomy$z6003amateurs' manuals

76
$z2103astronomy$21naked eye$z6003amateurs' manuals

77
$z2103astronomy$zp103calculationswinzs003usevofwin$z3103
electronic calculators$01pocket

78
$x0103Avon$yp103Bath$y1103museums$y1032$yq103Holburne of Menstrie
Museum$yp003exhibits$yq003items associated with astronomy$d
1460-1630$x2103astronomy$d1460-1630$yp003items associated with
astronomy, 1460-1630 exhibited at Holburne of Menstrie Museum
$z6003catalogues

79
$z2103astronomy$z2103observationsvbyz2022astronomical
observations$z3103Ptolemaeus, Claudius

80
$z1103astronomical observatories

81
$z0003United States$z1103astronomical observatories$z6003
visitors' guides

82
$z0103Edinburgh$z1103astronomical observatories$z1022$zq103Royal
Observatory, Edinburgh$dto 1972$z6003conference proceedings

83
$z0103Edinburgh$z1103astronomical observatories$z1022$zq103Royal
Observatory, Edinburgh$z6003serials

84
$z0101London$zp103Greenwich (London Borough)$z1103astronomical
observatories$z1032$zq103Royal Greenwich Observatory$d1676

85
$z0101London$zp103Greenwich (London Borough)$z1103astronomical
observatories$z1032$zq103Royal Greenwich Observatory$dto 1946

86
$z0103East Sussex$zp103Herstmonceaux$z1103astronomical observatories$z1032$zq103Royal Greenwich Observatory

87
$z0103East Sussex$zp103Herstmonceaux$z1103astronomical observatories$z1032$zq103Royal Greenwich Observatory$z6003 serials

88
$z0103East Sussex$zp103Herstmonceaux$z1103astronomical observatories$z1032$zq103Royal Greenwich Observatory$dto 1975

89
$z1103telescopes$21optical$21astronomical

90
$z1103telescopes$21optical$21astronomical$z6003amateurs' manuals

91
$z1103telescopes$21optical$21astronomical$z2103selection$v&$zg003 testing$z6003amateurs' manuals

92
$z1103telescopes$21optical$21astronomical$z2003use$z6003amateurs' manuals

93
$z1103telescopes$21astronomical$z6003for children

94
$z1103telescopes$21astronomical$dto 1953

95
$z1103telescopes$21astronomical$dto 1975

96
$z0103Edinburgh$z1103radiotelescopes$z3003organisation$z1032 $zq103Royal Observatory, Edinburgh. U.K. Infrared Telescope Unit $z6003serials

97
$z0103California$zp103Mount Palomar$z1103telescopes$21 astronomical$z1032Mount Palomar$zq103200-inch Hale telescope

98
$z1103astrolabes$dto ca 1930

99
$z1103equinoctial dials$21Islamic$dca 1550-1884

100
$z1103astrolabes$21planispheric

101
$z1103astronomical bodies$z2103observation from space vehicles

102
$z1103astronomical bodies$z2103observation from space vehicles
$z2002$z3103instrumentation$z6003conference proceedings

103
$z2103astronomy$21gamma ray$z6003conference proceedings

104
$z0003Great Britain$z2103astronomy$21gamma ray

105
$z0003Great Britain$z2103astronomy$21x-ray

106
$z1103spectrometers$21astronomical

107
$z2103astronomy$zs003use$dto 1973$vofwinz3103interferometers$21
intensity

108
$z2103radioastronomy

109
$z2103radioastronomy$dto 1974

110
$z2103radioastronomy$dto 1977

111
$z0003Great Britain$z2103radioastronomy

112
$z0003Great Britain$z2103radioastronomy$dto 1975

113
$z2103astronomy$21x-ray

114
$z2103astronomy$21x-ray$z6003conference proceedings

115
$z2103astronomy$21spherical

116
$x2103astronomy$y2003implications of refraction of
electromagnetic radiation$x1103electromagnetic radiation$y2103
refraction$y2003implications for astronomy

117
$z2103astronomical bodies

118
$z1103astronomical bodies$z6003for children

119
$z1103astronomical bodies$z6003for schools

120
$zl103astronomical bodies$z6003identification manuals

121
$zl003astronomical bodies$zql03singularities

122
$zl103black holes

123
$zl103black holes$z6003conference proceedings

124
$zl103black holes$z6003for children

125
$zl103black holes$z2003theorieswofzs003applicationsvofwin
$z3002physics$zpl03general theory of relativity

126
$zl103masers$21celestial

127
$z2103astronomy$21descriptive$z5003study regions$zql03universe
visible from the southern hemisphere

128
$z2103astronomy$21extragalactic

129
$zl103outer space$z6003for children

130
$zl103pulsars

131
$zl103quasi-stellar objects$zpl03nuclei$z6003conference
proceedings

132
$zl103white holes

133
$zl103astronomical bodies$z6003serials

134
$zl103astronomical data$z6003serials

135
$zl103planetariums$dto 1977

136
$z2103astrophysics

137
$z2103astrophysics$zs003applicationsvofwin$z2103theoretical
physics

138
$x2103astrophysics$ys003applicationsvofy3003theories of plasma turbulence$x1103plasmas$y2103turbulence$y3003theories$ys003 applicationsviny3003astrophysics

139
$z2103astrophysics$z6003festschriften

140
$z2103astrophysics$zp103plasma processes

141
$x2103astrophysics$yp003research$y2003applications in physics research$x2103physics$yp003research$y2003applications of astrophysics research

142
$z2103physics$21cosmic$z6003serials

143
$z1103plasmas$z3103astrophysical aspects

144
$z2103astrophysics$21relativistic

145
$z2103astrophysics$21relativistic$zs003use$vofwinz3103space vehicles$z6003conference proceedings

146
$z2103astrophysics$zp003equipment & techniques

147
$z2103astrophysics$z6003serials

148
$x2103astrophysics$yp003research$y2003role of Spacelab Programme $x1103outer space$y2103research projectsvbyy2022space research projects$y3103European Space Agency$y1042$yq103Spacelab Programme $y2003role in astrophysical research$z6003conference proceedings

149
$z2103astrophysics$z2002$z3103Dyson, Freeman John$dto 1979$z6003 biographies

150
$z2103astronomy$21infrared$22far$z6003conference proceedings

151
$z2103astronomy$21infrared

152
$z2103astronomy$21infrared$z6003conference proceedings

153
$z2103astronomy$21infrared$zp003research by British institutions $z6003conference proceedings

154
$z1103galaxies$zp103radiation$wfrom$zp103redshifts$z2003
interpretation$z6003conference proceedings

155
$z1103astronomical bodies$zp103magnetic fields

156
$z1103dynamo theory

157
$z1103astronomical bodies$zp103radiation

158
$z1103astronomical bodies$zp103radio frequency radiation$zp103
recombination lines$z6003conference proceedings

159
$z1103outer space$zp103electromagnetic radiation

160
$z2103astrophysics$21nuclear

161
$z1103solar system$zp103electrons$zp103charge$z2103variation

162
$z1103outer space$zp103cosmic rays$z2103composition

163
$z1103outer space$zp103cosmic rays$z2103variation

164
$z1103outer space$zp003radiation$21cosmic$21high energy

165
$z2103astrophysics$21high energy

166
$z2003astronomy$zp103cosmology$z6003conference proceedings

167
$z2103cosmography$dca 1470-ca 1700

168
$z1103universe

169
$z1103universe$z6003for children

170
$z1103universe$z3003theories

171
$z1103universe$z3003theories$z6003early works

172
$z1103universe$z2003theoriesvofwof$z3103civilizations$21ancient

173
$z2003astronomy$zp103cosmology$z2002$z3103mathematical aspects

174
$z1103universe$z3103mathematical models

175
$z1103universe$z6003illustrations

176
$z2003astronomy$zp103cosmology$dto 1976

177
$z2003astronomy$zp103cosmology$dto 1979

178
$z1103universe$z3003theories$dca B.C.3000-A.D.1687

179
$z1103universe$dto 1977

180
$z1103universe$dto 1978

181
$z1103universe$zp003structure

182
$z1103interplanetary space$zp103plasmas$z2103observation$zp003
equipment & techniques

183
$z1103galaxies

184
$z1103galaxies$zp103nuclei$21active$z6003conference proceedings

185
$z1103galaxies$z2103evolution

186
$z1103galaxies$zp103images$z2003measurement$z3003organisations
$z1042$zq103COSMOS Facility$z6003serials

187
$z1103galaxies$zp103physical properties$z6003conference
proceedings

188
$z1103clouds$21molecular$21interstellar$z6003conference
proceedings

189
$z1103interstellar space$zp103matter

190
$z1103interstellar space$zp103matter$zp003structure$v&$zg103
physical properties$z6003conference proceedings

191
$zl103interstellar space$zp103molecules$z6003conference proceedings

192
$zl103Large Magellanic Cloud$zp103sources of H-alpha radiation $z6003charts

193
$zl103nebulas$z2103observation$z6003amateurs' manuals

194
$zl103outer space$zp103dusts

195
$zl103outer space$zp103dusts$z6003conference proceedings

196
$zl103galaxies$2lradio$zp103physical properties

197
$zl103Small Magellanic Cloud$z6103atlases

198
$zl103Galaxy$z2103simulationwofzs003usevofwin$z3103monuments $dca B.C.2500

199
$zl103Milky Way

200
$zl103astronomical bodies$z2103observationwofzs003usevofwin $z3103telescopes$2lastronomical$z5003study examples$zq103Crab Nebula

201
$zl103Crab Nebula

202
$zl103nebulas$z2103observation$dca 100-ca 1800

203
$z2103cosmogony

204
$z2103cosmogony$zp103general theory of relativity

205
$zl103universe$zp103boundaries

206
$z2103cosmogony$dto 1975$z6003Polish texts

207
$zl103galaxies$zp103radiation$wfrom$zp103redshifts$z2003 interpretation

208
$zl103solar system

209
$zl103solar system$z6003for children

210
$zl103solar system$z6003for schools

211
$zl103solar system$z2003measurement

212
$zl103solar system$zp103plasmas

213
$xl103solar system$y2103simulation$y2003use of Stonehenge$x0103 Wiltshire$yp103Amesbury$yl003monuments$2lhenge$2lmegalithic$yl032 $yq103Stonehenge$y2003use in simulation of solar system

214
$zl103solar system$z6003serials

215
$zl103solar system$z3003research organisations$zl022$zq103Science Research Council (Great Britain). Solar System Committee$z6003 serials

216
$zl103solar system$z6003questions & answers

217
$zl103moon

218
$zl103moon$z6003conference proceedings

219
$zl103moon$z6003for children

220
$zl103moon$z3103observations$dto 1978

221
$zl103moon$zp103surface features

222
$zl003moon$zp103surface features$z2103observation$z6003amateurs' manuals

223
$zl103moon$zp103surface features$z6103photographs taken from space vehicles

224
$zl103moon$z2103motion$z2002$z3103Newton, Sir Isaac$zp103Theory of the moon's motion$z6003critical studies

225
$xl103moon$yp103eclipses$y2103forecasting$y2003use of Stonehenge $x0103Wiltshire$yp103Amesbury$y1003monuments$2lhenge$2lmegalithic $y1032$yq103Stonehenge$y2003use in forecasting eclipses of the moon

226
$zl103planets$zp103atmosphere

227
$zl103planets$z2103dynamics

228
$zl003planets$zq100Mercury$zl022$zl100Venus$zg100Jupiter$zr003 Mercury, Venus & Jupiter$z6103photographs taken from artificial satellites

229
$zl103planets$z2103orbits

230
$zl103solar system$zl103planets$2lgiant$zp103chemical constituents$z6003conference proceedings

231
$zl103solar system$zp103planets

232
$zl103solar system$zp103planets$z6003conference proceedings

233
$zl103solar system$zp103planets$zp103polarity

234
$zl103solar system$zp103planets$zp003structure$v&$zg103physical properties

235
$zl103solar system$zp103planets$2lterrestrial

236
$zl103solar system$zp103planets$z3103observations$zl032 observations of planets of solar system$zs003effects$dca B.C.2000-A.D.1019vofwon$z3103ephemeris time

237
$zl003planets$zq103Mercury$z6003early works

238
$zl003planets$zq103Mercury$zp103surface features

239
$zl003planets$zq103Mercury$zp103surface features$z6103photographs taken from Mariner 10

240
$zl103Venus$zp103surface features

241
$zl103Venus$zp103surface features$z6103photographs taken from space vehicles

242
$zl103Mars$zp103astronomical data$zt003related to$z3003dimensions of Great Pyramid

243
$zl103Mars$zp103surface features

244
$zl103Mars$zp103surface features$z6003for children

245
$zl103Mars$zp103surface features$z2103observation$dto 1977

246
$zl103Mars$zp103surface features$z2103observation$dto 1980

247
$zl103Mars$zp103surface features$z2103observation$dto ca 1930

248
$zl103Mars$zp103surface features$z3100photographs taken from Mariner 6$zg100photographs taken from Mariner 7$zr003photographs taken from Mariners 6 & 7

249
$zl103Mars$zp103surface features$z6103photographs taken from Vikings 1 & 2

250
$zl103Mars$zl103surface features$z2103remote sensing$z2032remote sensing of surface features of Mars$z3103Mariner 9$zp103vidicons

251
$zl103Jupiter$zp103satellites$zp103orbits

252
$zl103Jupiter$zp103surface features$z6103photographs taken from space vehicles

253
$zl103Saturn$zp103surface features$z6103photographs taken from space vehicles

254
$zl103Saturn$z2103observation$dto 1960

255
$zl103Neptune$z2003discovery

256
$zl103Pluto$z2003discovery$z6003personal observations

257
$z0103Northern hemisphere$z1103solar system$zp103planets$z6003 charts

258
$z1103meteors$dto 1969

259
$z1103meteorites$2liron

260
$z1103meteorites

261
$z1103meteors$v&$zg103meteorites$z6003conference proceedings

262
$z1103tektites$zp003structure$v&$zg103physical properties

263
$z0101London$zp103Kensington and Chelsea (London Borough)$z1103 museums$z1032$zq103British Museum (Natural History)$zp003stock $zq103meteorites$z6003catalogues

264
$z1103comets

265
$z1103comets$dto 1969

266
$z1103sun

267
$z1103sun$z2103evolution

268
$z1103sun$z6003for children

269
$z1103sun$z6003for schools$z6003Welsh texts

270
$z1103sun$zp103life cycle

271
$z2103radioastronomy$2lsolar$dto 1978

272
$z1103sun$zp103noise storms

273
$z1103sunspots

274
$z1103sun$zp103chromosphere

275
$zl103sun$zp103chromosphere$z2003disturbances

276
$zl103sun$z2103eclipses$z4103anthroposophical viewpoints

277
$xl103sun$y2103eclipses$y2103forecasting$y2003use of Stonehenge
$x0103Wiltshire$yp103Amesbury$y1003monuments$2lhenge$2lmegalithic
$y1032$yq103Stonehenge$y2003use in forecasting eclipses of the
sun

278
$zl103stars$2l0B$z2103distribution$wof$z2003determination$wof
$zs003applications$vofwinz3103photometry

279
$zl103stars

280
$zl103stars$zp103atmospheres$z2103observation$zp003equipment &
techniques

281
$zl103stars$z2103evolution

282
$zl103stars$z6003for children

283
$zl103stars$z2003formation

284
$zl103stars$zp003interiors

285
$zl103stars$v&$zg103constellations$z2103identification

286
$x1003stars$yq001white dwarfs & neutron stars$yp100white dwarfs
$xl103stars$2lneutron$zp003structure

287
$zl103Ursa Major

288
$zl103stars$zp103photospheres$z2103observation$v&$zg003analysis

289
$zl103stars$zp103magnitude$2lphotovisual$z6103atlases

290
$zl103stars$2lrotating$z3003theories$d1611-1976

291
$zl103stars$z2103proper motion

292
$zl100stars$zp003stars in region of galactic equator at longitude 140$z2103motion$21proper

293
$zl103binary stars

294
$zl103Procyon$zp103spectra$z6003illustrations

295
$zl103stars$21variable$22nebular

296
$zl103stars$21variable$z2103observation$z6003amateurs' manuals

297
$zl103stars$21pulsating

298
$zl103binary stars$21eclipsing$zp103light$z2103variation

299
$zl003stars$zq103Algol

300
$zl103stars$21flare

301
$zl103stars$21neutron$z6003conference proceedings

302
$zl103stars$21neutron$zp003structure & properties

303
$zl103novae$v&$zg103supernovae$z2103observation$dto 1976$vby$wof $z3103astronomers$21Far Eastern

304
$zl103supernovae

305
$zl103Vela X$z2103observationvbywof$z3103astronomers$21Sumerian

306
$zl103star clusters$z2103proper motion

307
$zl103globular clusters$z6003conference proceedings

308
$zl103stars$21cool$z2103spectroscopy$21infrared$22near

309
$zl103stars$zp103spectra$zp103energy$z2103distribution$z6103 spectrophotometric observations$01for

310
$zl103stars$z2103spectroscopy$2lultraviolet$zp103spectra$zp103 energy$z2103distribution$z6003tables

311
$zl103stars$z2103identification$z6003tables

312
$zl102land$z2100surveying$z2022$zl103stars$z6003tables$z6003for land surveying

313
$zl103constellations

314
$zl103constellations$z6003charts

315
$zl103constellations$z6003for children

316
$z0103Northern hemisphere$zl103constellations$z6003charts

317
$zl103stars$z6103atlases

318
$zl103stars$z6103atlases$z6103navigation$2lcelestial$01for

319
$zl103satellites$z2103motion$z6003conference proceedings

320
$zl103earth$zp103surface features$z3103photographs taken from artificial satellites

321
$zl103earth$zp103surface features$z6103photographs taken from space vehicles

322
$zl003planets$zq103earth

323
$zl003planets$zq103Earth$z6003for children

324
$zl103earth$zp103density

325
$zl103earth$zp103shape$v&$zg103size$z3003theories$dto 1969$z6003 for children

326
$zl103earth$z2100rotation$zg100orbit$z2003rotation & orbit

327
$x1103earth$y2103nutation$y2003effects of elasticity of earth's core$x1003earth$yp103core$yp103elasticity$y2003effects on nutation of earth$z6003conference proceedings

328
$z1103earth$z2103rotation$z6003conference proceedings

329
$z1103earth$z2103rotation$zp103variation

330
$z1103earth$z2103rotation$z6103geophysics$01for

331
$z2103astronautics

332
$z2103astronautics$z6003conference proceedings

333
$z2103astronautics$z6003for children

334
$z2103astronautics$z6003for schools

335
$z2103astronautics$z6003Polish texts

336
$z2003space flight$2interstellar$2instantaneous$zs003usevofw in$z3103black holes$v&$zg103stars$2iron

337
$z1102secondary schools$z2100teaching$z1022$z2103astronautics $z2103mathematics$z6003for secondary school teaching

338
$z2103astronautics$z6003encyclopaedias

339
$z2103astronautics$z6003encyclopaedias$z6003for children

340
$z2103astronautics$z6003serials

341
$z2103astronautics$dto 1964

342
$z2103astronautics$dto 1975

343
$z2103astronautics$dto 1977$z6003for schools

344
$z2103astronautics$z2002$z3103Aldrin, Edwin Eugene$z6003 biographies

345
$z2103astronautics$z2002$z3103Collins, Michael, b.1930$z6003
biographies

346
$z2103astronautics$z2002$z3103Collins, Michael, b.1930$z6003
biographies$z6003for children

347
$z2103astronautics$z2002$z3103Irwin, James Benson$z6003
biographies

348
$z2103astronautics$z2002$z3103Irwin, James Benson$d1971-1978
$z6003biographies

349
$z0103Soviet Union$z2103astronautics$dto 1972

350
$x0003United States$y2103astronautics$ys103policies$dto 1975$vof
wony3103government$x1103United States$yp003government$yp003
policies on astronautics$dto 1975

351
$z2103space flight$2linterstellar$z2002$z3103feasibility studies
$z1032$zq103Project Daedalus

352
$z1103outer space$z2103explorationwofzs003usevofwin$z3103
machinery$z6003for children

353
$z2103space flight

354
$x2103space flight$y2003applications of human levitation$x1103man
$y2103levitation$y2003applications in space flight

355
$z2103space flight$z6003for children

356
$z2103space flight$z6003forecasts

357
$z2103space vehicles$z2003control

358
$z0003Great Britain$z1103secondary schools$zp003curriculum
subjects$zq103space flight$z6103teaching$01for

359
$z2103space flight$dto 1977

360
$z2103space flight$dto 1978

361
$z2103space flight$dto 1975$z6003for children

362
$z2103space flight$dto 1977$z6003for children

363
$z2103space flight$21Soviet$dto 1978

364
$z2103space flight$z2103dynamics

365
$z2103space flight$zp103trajectories$z2103optimisation

366
$z1103outer space$z2103space flight$21unmanned$z2002$z3103Voyager 1$v&$zg103Voyager 2$zp103time capsules

367
$z2103space flight$01unmanned$dto 1973

368
$z1103moon$z2103space flight$dto 1967

369
$z1003planets$zq103Mercury$z2103space flight$z2002$z3103Mariner 10

370
$z1103Venus$z2103space flight$z2002$z3103Mariner 10

371
$z1103Mars$z2103space flight$21unmanned$z3103Viking Mars Program

372
$z1103space shuttles

373
$z1103space shuttles$z6003for children

374
$z1103outer space$z2103space flight$21manned$z2002$z3103Skylab

375
$z1103outer space$z2103space flight$21manned$z2002$z3103Skylab$d 1973-1974

376
$z2103space flight$21manned$21interstellar

377
$z2103space flight$21manned

378
$z2103space flight$21manned$z2002$z3103Apollo-Soyuz Test Project

379
$z1103moon$z2103space flight$21manned$z2002$z3103Apollo 14

380
$z2103space flight$21manned$z6003illustrations

381
$z2103space flight$21manned$dto 1980

382
$z2103space flight$21manned$dto 1970

383
$z2103space flight$21manned$dto 1974

384
$z2103space flight$21manned$dto 1975$z6003for children

385
$z2103space flight$21manned$dto 1976

386
$z2103space flight$21manned$dto 1978

387
$z1103astronauts$21American$dto 1975

388
$z1103astronauts$21Soviet$dto 1977$z6003biographies

389
$z1103moon$z2103space flight$21manned$z2002$z3103Apollo 11

390
$z1103moon$z2103space flight$21manned$z2002$z3103Apollo 12

391
$z1103moon$z2103space flight$21manned$z2002$z3103Apollo 13

392
$z1103moon$z2103space flight$21manned$z2002$z3103Apollo 15

393
$z1103moon$z2103space flight$21manned$z2002$z3103Apollo 16

394
$z1103moon$z2103space flight$21manned$z2002$z3103Apollo 17

395
$z1103moon$z2103space flight$21manned$z2002$z3103Apollo Project
$zt003compared with$z3003paintings of manned space flight by
Smith, Ralph A$d1945-1955

396
$z1103moon$z2103space flight$21manned$z6003for children

397
$z2103space flight$2lmanned$z3103Apollo$z2103link-up$dl975$vwith $wwith$z3103Soyuz 19

398
$zl103satellites$2lartificial

399
$zl103satellites$2lartificial$z6003for children

400
$zl103satellites$2lartificial$z2103observation$z6003amateurs' manuals

401
$zl103satellites$2lartificial$z6003tables

402
$zl103satellites$2lartificial$22Russian$dto 1970

403
$zl103space vehicles$z6003conference proceedings

404
$zl103space vehicles$zpl03thermal properties$z6003conference proceedings

405
$zl103space vehicles$z6003technical data

406
$zl103space vehicles$z6003illustrations$z6003for children

407
$zl103space vehicles$zpl03temperature$z2003control$z2032thermal control of space vehicles$zs003applications$vofwinz3103heat transfer$z6003conference proceedings

408
$zl103space vehicles$dto 1975$z6003for children

409
$zl103space vehicles$dto 1975$z6003for schools

410
$zl103space vehicles$dto 1978

411
$zl103space vehicles$dto 1979$z6003for children

412
$zl103space vehicles$z6003forecasts

413
$zl103satellites$2lartificial$z2103dynamics$z6003French texts

414
$z2103space vehicles$z2103automatic control$z6003conference proceedings

415
$z1003aerospace vehicles$zq103rockets$z2103propulsion

416
$z1003aerospace vehicles$zq103rockets$dto 1974

417
$z1003aerospace vehicles$zq103rockets$dto 1977

418
$z1103model rockets$z2103aerodynamics

419
$z1003aerospace vehicles$zq103rockets$z2003development$dto 1969

420
$z1103space vehicles$z3103electric propulsion systems$z6003 conference proceedings

421
$z1103space vehicles$zp103astronauts$z2103living conditions

422
$z2103space flight$z2002$z2103economic aspects$dto 1972

423
$z1103automatic control systems$z6003conference proceedings

STRINGS MANIPULATED AS AN INDEX

This index was produced using the suite of programs written by Mr F. Smith of the Department of Library and Information Studies, Loughborough University of Technology.

Active nuclei. Galaxies
- Conference proceedings 184
Aerodynamics. Model rockets 418
Aldrin, Edwin Eugene. Astronautics
- Biographies 344
Algol. Stars 299
Amateur astronomy 1
- Serials 17
America
Pre-Columbian America. Astronomy - Conference proceedings 45
American astronauts
To 1975 387
Ancient astronomy 28
Ancient civilizations
Theories of universe 172
Ancient world
Astronomy 39
Astronomy - Conference proceedings 40
Anthroposophical viewpoints
Sun. Eclipses 276
Apollo
Manned space flight. Link-up with Soyuz 19, 1975 397
Apollo 11. Manned space flight. Moon 389
Apollo 12. Manned space flight. Moon 390
Apollo 13. Manned space flight. Moon 391
Apollo 14. Manned space flight. Moon 379
Apollo 15. Manned space flight. Moon 392
Apollo 16. Manned space flight. Moon 393
Apollo 17. Manned space flight. Moon 394
Apollo Project. Moon
compared with paintings of manned space flight by Smith, Ralph A, 1945-1955. Manned space flight 395
Apollo-Soyuz Test Project. Manned space flight 378
Artificial satellites 398
- For children 399
- Tables 401
Dynamics - French texts 413
Observation - Amateurs' manuals 400
Russian artificial satellites, to 1970 402
Astrolabes
To ca 1930 98
Planispheric astrolabes 100
Astrology
Astronomy - For astrology 15
Influence on astronomy, 1300-1500 30
Astronautics 331
- Conference proceedings 332
- Encyclopaedias 338
- Encyclopaedias - For children 339
- For children 333
- For schools 334
- Polish texts 335
- Serials 340
To 1964 341
To 1975 342
To 1977 - For schools 343
Aldrin, Edwin Eugene - Biographies 344
Collins, Michael, b.1930 - Biographies 345
Collins, Michael, b.1930 - Biographies - For children 346
Irwin, James Benson - Biographies 347
Irwin, James Benson, 1971-1978 - Biographies 348
Mathematics - For secondary school teaching 337
Astronautics. Soviet Union
To 1972 349
Astronautics. United States
Policies of government, to 1975 350
Astronauts
American astronauts, to 1975 387
Soviet astronauts, to 1977 - Biographies 388
Astronauts. Space vehicles
Living conditions 421
Astronomers
Far Eastern astronomers. Observation of novae & supernovae 303
Sumerian astronomers. Observation of Vela X 305

Astronomical bodies 117
- For children 118
- For schools 119
- Identification manuals 120
- Serials 133
Magnetic fields 155
Observation - Amateurs' manuals 73
Observation from space vehicles 101
Observation from space vehicles. Instrumentation
- Conference proceedings 102
Observation. Use of astronomical telescopes - Study
examples: Crab Nebula 200
Observations, to 1604. Applications 74
Orbits 54
Orbits. Calculation 55
Radiation 157
Radio frequency radiation. Recombination lines - Conference
proceedings 158
Astronomical bodies. Solar system
Close-range gravitational interactions with planets 59
Astronomical data
- Serials 134
Astronomical data. Mars
related to dimensions of Great Pyramid 242
Astronomical observatories 80
Astronomical observatories. Edinburgh
Royal Observatory, Edinburgh, to 1972 - Conference
proceedings 82
Royal Observatory, Edinburgh - Serials 83
Astronomical observatories. Greenwich (London Borough)
Royal Greenwich Observatory, 1676 84
Royal Greenwich Observatory, to 1946 85
Astronomical observatories. Herstmonceaux. East Sussex
Royal Greenwich Observatory 86
Royal Greenwich Observatory - Serials 87
Royal Greenwich Observatory, to 1975 88
Astronomical observatories. United States
- Visitors' guides 81
Astronomical spectrometers 106
Astronomical telescopes
- For children 93
To 1953 94
To 1975 95
Astronomical optical telescopes 89
Astronomical optical telescopes - Amateurs' manuals 90
Astronomical optical telescopes. Selection & testing
- Amateurs' manuals 91
Astronomical optical telescopes. Use - Amateurs' manuals 92
Use in observation of astronomical bodies - Study examples:
Crab Nebula 200
Astronomical telescopes. Mount Palomar. California
200-inch Hale telescope 97
Astronomy 2
- Amateurs' manuals 75
- Early works 23
- Early works - Latin-English parallel texts 3
- Encyclopaedias 16
- For astrology 15
- For children 4
- For children - Serials 18
- For schools 5
- Manuals 72
- Poems - Early works - Latin-English parallel texts 6
- Programmed instructions 22
- Questions & answers 21
- Serials 19
- Tables 12
- Technical data 13
- Welsh texts 8
1900-1975 32
1968-1969 35
Ca 1500-ca 1720 - Biographies 36
Ca 1540-1978 31
Ca 1950-1973 33

Astronomy
Ca 1950-1975 34
Ca B.C.2000- A.D.1543 29
Ca B.C.600- ca A.D.1750 24
To 1974 25
To 1976 26
To 1979 27
Amateur astronomy 1
Amateur astronomy - Serials 17
Ancient astronomy 28
Calculations. Use of pocket electronic calculators 77
Descriptive astronomy - Study regions: Universe visible from the southern hemisphere 127
Extragalactic astronomy 128
Far infrared astronomy - Conference proceedings 150
Gamma ray astronomy - Conference proceedings 103
Herschel, Sir John, 1st bart - Biographies 37
Implications of refraction of electromagnetic radiation 116
Influence of astrology, 1300-1500 30
Infrared astronomy 151
Infrared astronomy - Conference proceedings 152
Infrared astronomy. Research by British institutions - Conference proceedings 153
Naked eye astronomy - Amateurs' manuals 76
Observations by Ptolemaeus, Claudius 79
Projects 7
Spherical astronomy 115
Theories - Early works 47
Theories, ca 1500-1679 49
Theories of Copernicus, Nicolaus 50
Theories of Copernicus, Nicolaus - Conference proceedings 51
Theories of Copernicus, Nicolaus - Polish texts 52
Use of intensity interferometers, to 1973 107
X-ray astronomy 113
X-ray astronomy - Conference proceedings 114
Astronomy. Ancient world 39
- Conference proceedings 40
Astronomy. China
- Serials 42
Astronomy. Europe
1400-1650 - Conference proceedings 41
Astronomy. Great Britain
- Career guides 14
Gamma ray astronomy 104
X-ray astronomy 105
Astronomy. Japan
600-1854. Cultural aspects 43
Astronomy. Netherlands
Oort, Jan Hendrik - Festschriften 38
Astronomy. Pre-Columbian America
- Conference proceedings 45
Astronomy. Pre-Columbian Mexico
- Conference proceedings 46
Astronomy. South Africa
To 1976 44
Astrophysical aspects. Plasmas 143
Astrophysics 136
- Festschriften 139
- Serials 147
Applications of theoretical physics 137
Applications of theories of plasma turbulence 138
Dyson, Freeman John, to 1979 - Biographies 149
Equipment & techniques 146
High energy astrophysics 165
Nuclear astrophysics 160
Plasma processes 140
Relativistic astrophysics 144
Relativistic astrophysics. Use of space vehicles - Conference proceedings 145
Research. Applications in physics research 141
Research. Role of Spacelab Programme - Conference proceedings 148
Atlases
Small Magellanic Cloud 197

Atlases
Stars 317
Stars - Atlases - For celestial navigation 318
Stars. Photovisual magnitude 289
Atmosphere. Planets 226
Atmospheres. Stars
Observation. Equipment & techniques 280
Automatic control. Space vehicles
- Conference proceedings 414
Automatic control systems
- Conference proceedings 423
Avon
Bath. Museums: Holburne of Menstrie Museum. Exhibits: Items associated with astronomy, 1460-1630 - Catalogues 78
Bath. Avon
Museums: Holburne of Menstrie Museum. Exhibits: Items associated with astronomy, 1460-1630 - Catalogues 78
Binary stars 293
Eclipsing binary stars. Light. Variation 298
Black holes 122
- Conference proceedings 123
- For children 124
Theories. Applications of general theory of relativity 125
Use in instantaneous interstellar space flight 336
Boundaries. Universe 205
British Museum (Natural History)
Stock: Meteorites - Catalogues 263
Calculation (Kepler's laws). Orbits. Planets
Applications of digital computer systems 56
Calculation. Orbits. Astronomical bodies 55
Calculations. Astronomy
Use of pocket electronic calculators 77
California
Mount Palomar. Astronomical telescopes: 200-inch Hale telescope 97
Cambridge
Universities: University of Cambridge. Institute of Astronomy - Serials 20
Cambridgeshire
Cambridge. Universities: University of Cambridge. Institute of Astronomy - Serials 20
Celestial masers 126
Celestial mechanics
Theories of Galilei, Galileo 53
Celestial navigation
Stars - Atlases - For celestial navigation 318
Charge. Electrons. Solar system
Variation 161
Chemical constituents. Giant planets. Solar system
- Conference proceedings 230
China
Astronomy - Serials 42
Chromosphere. Sun 274
Disturbances 275
Civilizations
Ancient civilizations. Theories of universe 172
Close-range interactions. Astronomical bodies. Solar system
Close-range gravitational interactions with planets 59
Close-range interactions. Planets. Solar system
Close-range gravitational interactions with astronomical bodies 59
Clouds
Interstellar molecular clouds - Conference proceedings 188
Collins, Michael, b.1930. Astronautics
- Biographies 345
- Biographies - For children 346
Comets 264
To 1969 265
Composition. Cosmic rays. Outer space 162
Constellations 313
- Charts 314
- For children 315
Identification 285

Constellations. Northern hemisphere
- Charts 316
Cool stars
Near infrared spectroscopy 308
Copernicus, Nicolaus
Theories of astronomy 50
Theories of astronomy - Conference proceedings 51
Theories of astronomy - Polish texts 52
Cosmic disasters 9
Cosmic physics
- Serials 142
Cosmic radiation. Outer space
High energy cosmic radiation 164
Cosmic rays. Outer space
Composition 162
Variation 163
Cosmogony
To 1975 - Polish texts 203
General theory of relativity 206
Cosmography
Ca 1470-ca 1700 204
Cosmology. Astronomy
- Conference proceedings 167
To 1976 166
To 1979 176
Mathematical aspects 177
COSMOS Facility
- Serials 173
Crab Nebula 186
Crab Nebula. Study examples
Astronomical bodies. Observation. Use of astronomical telescopes 201
Criticism. Theories of Velikovsky, Immanuel of origins of Venus
1950-1977 200
Cultural aspects. Astronomy, 600-1854. Japan 69
Density. Earth 43
Descriptive astronomy
- Study regions: Universe visible from the southern hemisphere 324
Digital computer systems
Applications in calculation of orbits of planets by Kepler's laws 127
Disasters
Cosmic disasters 56
Distribution. Energy. Spectra. Stars
- For spectrophotometric observations 9
Distribution. Energy. Spectra. Ultraviolet spectroscopy. Stars
- Tables 309
Distribution. OB stars
Determination. Applications of photometry 310
Dusts. Outer space
- Conference proceedings 278
Dynamics. Artificial satellites
- French texts 194
Dynamics. Planets 195
Dynamics. Space flight 413
Dynamo theory 227
Dyson, Freeman John. Astrophysics
To 1979 - Biographies 364
Earth
Density 156
Nutation. Effects of elasticity of earth's core
- Conference proceedings 149
Rotation - Conference proceedings 324
Rotation - For geophysics 327
Rotation & orbit 328
Rotation. Variation 330
Shape & size. Theories, to 1969 - For children 326
Surface features - Photographs taken from space vehicles 329
Surface features. Photographs taken from artificial satellites 325
Earth. Planets 321
320
322

Earth. Planets
- For children 323
East Sussex
Herstmonceaux. Astronomical observatories: Royal Greenwich Observatory 86
Herstmonceaux. Astronomical observatories: Royal Greenwich Observatory - Serials 87
Herstmonceaux. Astronomical observatories: Royal Greenwich Observatory, to 1975 88
Eclipses. Moon
Forecasting. Use of Stonehenge 225
Eclipses. Sun
- Anthroposophical viewpoints 276
Forecasting. Use of Stonehenge 277
Eclipsing binary stars
Light. Variation 298
Economic aspects. Space flight
To 1972 422
Edinburgh
Astronomical observatories: Royal Observatory, Edinburgh, to 1972 - Conference proceedings 82
Astronomical observatories: Royal Observatory, Edinburgh - Serials 83
Radiotelescopes. Organisation: Royal Observatory, Edinburgh. U.K. Infrared Telescope Unit - Serials 96
Electric propulsion systems. Space vehicles
- Conference proceedings 420
Electromagnetic radiation. Outer space 159
Electronic calculators
Pocket electronic calculators. Use in calculations in astronomy 77
Electrons. Solar system
Charge. Variation 161
Energy. Spectra. Stars
Distribution - For spectrophotometric observations 309
Energy. Spectra. Ultraviolet spectroscopy. Stars
Distribution - Tables 310
Ephemeris time
Effects on observations of planets of solar system, ca B.C.2000-A.D.1019 236
Equinoctial dials
Islamic equinoctial dials, ca 1550-1884 99
Evolution. Galaxies 185
Evolution. Stars 281
Evolution. Sun 267
Exploration
Interplanetary exploration. Influence on theories of solar system, to 1978 65
Exploration. Outer space
Use of machinery - For children 352
Extragalactic astronomy 128
Far Eastern astronomers
Observation of novae & supernovae 303
Far infrared astronomy
- Conference proceedings 150
Feasibility studies. Interstellar space flight
Project Daedalus 351
Flare stars 300
Forecasting. Eclipses. Moon
Use of Stonehenge 225
Forecasting. Eclipses. Sun
Use of Stonehenge 277
Galaxies 183
Active nuclei - Conference proceedings 184
Evolution 185
Images. Measurement. Organisations: COSMOS Facility - Serials 186
Physical properties - Conference proceedings 187
Radiation. Redshifts. Interpretation 207
Radiation. Redshifts. Interpretation - Conference proceedings 154
Radio galaxies. Physical properties 196
Galaxy
Simulation. Use of monuments, ca B.C.2500 198

Galilei, Galileo
Theories of celestial mechanics 53
Gamma ray astronomy
- Conference proceedings 103
Gamma ray astronomy. Great Britain 104
General theory of relativity. Cosmogony 204
General theory of relativity. Physics
Applications in theories of black holes 125
Geophysics
Earth. Rotation - For geophysics 330
Giant planets. Solar system
Chemical constituents - Conference proceedings 230
Globular clusters
- Conference proceedings 307
Government. United States
Policies on astronautics, to 1975 350
Gravitational interactions. Astronomical bodies. Solar system
Close-range gravitational interactions with planets 59
Gravitational interactions. Planets. Solar system
Close-range gravitational interactions with astronomical bodies 59
Greenwich (London Borough)
Astronomical observatories: Royal Greenwich Observatory, 1676 84
Astronomical observatories: Royal Greenwich Observatory, to 1946 85
Heat transfer
Applications in thermal control of space vehicles
- Conference proceedings 407
Herschel, Sir John, 1st bart. Astronomy
- Biographies 37
Herstmonceaux. East Sussex
Astronomical observatories: Royal Greenwich Observatory 86
Astronomical observatories: Royal Greenwich Observatory
- Serials 87
Astronomical observatories: Royal Greenwich Observatory, to 1975 88
High energy astrophysics 165
High energy radiation. Outer space
High energy cosmic radiation 164
Hoerbiger, Hans. Theories of solar system 66
Holburne of Menstrie Museum
Exhibits: Items associated with astronomy, 1460-1630
- Catalogues 78
Identification. Stars
- Tables 311
Identification. Stars & constellations 285
Images. Galaxies
Measurement. Organisations: COSMOS Facility - Serials 186
Infrared astronomy 151
- Conference proceedings 152
Far infrared astronomy - Conference proceedings 150
Research by British institutions - Conference proceedings 153
Infrared spectroscopy. Cool stars
Near infrared spectroscopy 308
Instantaneous space flight
Instantaneous interstellar space flight. Use of black holes & iron stars 336
Instrumentation. Observation from space vehicles. Astronomical bodies
- Conference proceedings 102
Intensity interferometers
Use in astronomy, to 1973 107
Interactions. Astronomical bodies. Solar system
Close-range gravitational interactions with planets 59
Interactions. Planets. Solar system
Close-range gravitational interactions with astronomical bodies 59
Interferometers
Intensity interferometers. Use in astronomy, to 1973 107
Interplanetary exploration
Influence on theories of solar system, to 1978 65
Interplanetary space
Plasmas. Observation. Equipment & techniques 182

Interstellar clouds
Interstellar molecular clouds - Conference proceedings 188
Interstellar space
Matter 189
Matter. Structure & physical properties - Conference proceedings 190
Molecules - Conference proceedings 191
Interstellar space flight
Feasibility studies: Project Daedalus 351
Instantaneous interstellar space flight. Use of black holes & iron stars 336
Interstellar manned space flight 376
Iron meteorites 259
Iron stars
Use in instantaneous interstellar space flight 336
Irwin, James Benson. Astronautics
- Biographies 347
1971-1978 - Biographies 348
Islamic equinoctial dials
Ca 1550-1884 99
Japan
Astronomy, 600-1854. Cultural aspects 43
Jupiter
Mercury, Venus & Jupiter - Photographs taken from artificial satellites 228
Satellites. Orbits 251
Surface features - Photographs taken from space vehicles 252
Kensington and Chelsea (London Borough)
Museums: British Museum (Natural History). Stock: Meteorites - Catalogues 263
Kepler's laws. Calculation. Orbits. Planets
Applications of digital computer systems 56
Land
Stars - Tables - For land surveying 312
Large Magellanic Cloud
Sources of H-alpha radiation - Charts 192
Life cycle. Sun 270
Light. Eclipsing binary stars
Variation 298
Link-up. Apollo. Manned space flight
With Soyuz 19, 1975 397
Living conditions. Astronauts. Space vehicles 421
London
Greenwich (London Borough). Astronomical observatories: Royal Greenwich Observatory, 1676 84
Greenwich (London Borough). Astronomical observatories: Royal Greenwich Observatory, to 1946 85
Kensington and Chelsea (London Borough). Museums: British Museum (Natural History). Stock: Meteorites - Catalogues 263
Machinery
Use in exploration of outer space - For children 352
Magnetic fields. Astronomical bodies 155
Magnitude. Stars
Photovisual magnitude - Atlases 289
Manned space flight
- Illustrations 377
To 1970 380
To 1974 382
To 1975 - For children 383
To 1976 384
To 1978 385
To 1980 386
Apollo. Link-up with Soyuz 19, 1975 381
Apollo-Soyuz Test Project 397
Interstellar manned space flight 378
Manned space flight. Moon
- For children 376
Apollo 11 396
Apollo 12 389
Apollo 13 390
Apollo 14 391
Apollo 15 379
Apollo 16 392
Apollo 17 393
394

Manned space flight. Moon
Apollo Project compared with paintings of manned space flight by Smith, Ralph A, 1945-1955 395
Manned space flight. Outer space
Skylab 374
Skylab, 1973-1974 375
Mariner 10. Space flight. Mercury. Planets 369
Mariner 10. Space flight. Venus 370
Mariner 9
Vidicons. Remote sensing of surface features of Mars 250
Mars
Astronomical data related to dimensions of Great Pyramid 242
Surface features 243
Surface features - For children 244
Surface features - Photographs taken from Vikings 1 & 2 249
Surface features. Observation, to 1977 245
Surface features. Observation, to 1980 246
Surface features. Observation, to ca 1930 247
Surface features. Photographs taken from Mariners 6 & 7 248
Surface features. Remote sensing. Mariner 9. Vidicons 250
Unmanned space flight. Viking Mars Program 371
Masers
Celestial masers 126
Mathematical aspects. Cosmology. Astronomy 173
Mathematical models. Universe 174
Mathematics. Astronautics
- For secondary school teaching 337
Matter. Interstellar space 189
Structure & physical properties - Conference proceedings 190
Mechanics
Celestial mechanics. Theories of Galilei, Galileo 53
Mercury. Planets
- Early works 237
Mercury, Venus & Jupiter - Photographs taken from artificial satellites 228
Space flight. Mariner 10 369
Surface features 238
Surface features - Photographs taken from Mariner 10 239
Meteorites 260
- Conference proceedings 261
Iron meteorites 259
Meteorites. Stock. British Museum (Natural History)
- Catalogues 263
Meteors
- Conference proceedings 261
To 1969 258
Mexico
Pre-Columbian Mexico. Astronomy - Conference proceedings 46
Milky Way 199
Model rockets
Aerodynamics 418
Molecular clouds
Interstellar molecular clouds - Conference proceedings 188
Molecules. Interstellar space
- Conference proceedings 191
Monuments
Ca B.C.2500. Use in simulation of Galaxy 198
Moon 217
- Conference proceedings 218
- For children 219
Eclipses. Forecasting. Use of Stonehenge 225
Manned space flight - For children 396
Manned space flight. Apollo 11 389
Manned space flight. Apollo 12 390
Manned space flight. Apollo 13 391
Manned space flight. Apollo 14 379
Manned space flight. Apollo 15 392
Manned space flight. Apollo 16 393
Manned space flight. Apollo 17 394
Manned space flight. Apollo Project compared with paintings of manned space flight by Smith, Ralph A, 1945-1955 395
Motion. Newton, Sir Isaac. Theory of the moon's motion - Critical studies 224
Motion. Theories - Early works - Facsimiles 70

Moon
Observations, to 1978 220
Origin. Theories 71
Space flight, to 1967 368
Surface features 221
Surface features - Photographs taken from space vehicles 223
Motion. Moon
Newton, Sir Isaac. Theory of the moon's motion - Critical studies 224
Theories - Early works - Facsimiles 70
Motion. Planets. Solar system
Retrograde motion 62
Theories - Early works 60
Motion. Satellites
- Conference proceedings 319
Motion. Stars in region of galactic equator at longitude 140
Proper motion 292
Mount Palomar. California
Astronomical telescopes: 200-inch Hale telescope 97
Museums. Bath. Avon
Holburne of Menstrie Museum. Exhibits: Items associated with astronomy, 1460-1630 - Catalogues 78
Museums. Kensington and Chelsea (London Borough)
British Museum (Natural History). Stock: Meteorites - Catalogues 263
Naked eye astronomy
- Amateurs' manuals 76
Navigation
Stars - Atlases - For celestial navigation 318
Near infrared spectroscopy. Cool stars 308
Nebular variable stars 295
Nebulas
Observation - Amateurs' manuals 193
Observation, ca 100-ca 1800 202
Neptune
Discovery 255
Netherlands
Astronomy. Oort, Jan Hendrik - Festschriften 38
Neutron stars
- Conference proceedings 301
Structure & properties 302
Newton, Sir Isaac. Motion. Moon
Theory of the moon's motion - Critical studies 224
Noise storms. Sun 272
Northern hemisphere
Constellations - Charts 316
Solar system. Planets - Charts 257
Novae
Observation by Far Eastern astronomers, to 1976 303
Nuclear astrophysics 160
Nuclei. Galaxies
Active nuclei - Conference proceedings 184
Nuclei. Quasi-stellar objects
- Conference proceedings 131
Nutation. Earth
Effects of elasticity of earth's core - Conference proceedings 327
OB stars
Distribution. Determination. Applications of photometry 278
Observation. Artificial satellites
- Amateurs' manuals 400
Observation. Astronomical bodies
- Amateurs' manuals 73
Use of astronomical telescopes - Study examples: Crab Nebula 200
Observation. Atmospheres. Stars
Equipment & techniques 280
Observation from space vehicles. Astronomical bodies 101
Instrumentation - Conference proceedings 102
Observation. Nebulas
- Amateurs' manuals 193
Ca 100-ca 1800 202
Observation. Novae & supernovae
By Far Eastern astronomers, to 1976 303

Observation. Photospheres. Stars 288
Observation. Plasmas. Interplanetary space
Equipment & techniques 182
Observation. Saturn
To 1960 254
Observation. Surface features. Mars
To 1977 245
To 1980 246
To ca 1930 247
Observation. Surface features. Moon
- Amateurs' manuals 222
Observation. Variable stars
- Amateurs' manuals 296
Observation. Vela X
By Sumerian astronomers 305
Observations. Astronomical bodies
To 1604. Applications 74
Observations. Astronomy
By Ptolemaeus, Claudius 79
Observations. Moon
To 1978 220
Observations. Planets. Solar system
Effects of ephemeris time, ca B.C.2000-A.D.1019 236
Oort, Jan Hendrik. Astronomy. Netherlands
- Festschriften 38
Optical telescopes
Astronomical optical telescopes 89
Astronomical optical telescopes - Amateurs' manuals 90
Astronomical optical telescopes. Selection & testing
- Amateurs' manuals 91
Astronomical optical telescopes. Use - Amateurs' manuals 92
Optimisation. Trajectories. Space flight 365
Orbit. Earth
Rotation & orbit 326
Orbits. Astronomical bodies 54
Calculation 55
Orbits. Planets 229
Calculation (Kepler's laws). Applications of digital
computer systems 56
Orbits. Satellites. Jupiter 251
Origin. Moon
Theories 71
Origins. Planets
Theories, to 1977 67
Origins. Planets. Solar system 61
Origins. Solar system 57
- Conference proceedings 58
Origins. Venus
Theories of Velikovsky, Immanuel - Critical studies 68
Theories of Velikovsky, Immanuel. Criticism, 1950-1977 69
Outer space 10
- For children 129
- For children - Irish texts 11
Cosmic rays. Composition 162
Cosmic rays. Variation 163
Dusts 194
Dusts - Conference proceedings 195
Electromagnetic radiation 159
Exploration. Use of machinery - For children 352
High energy cosmic radiation 164
Manned space flight. Skylab 374
Manned space flight. Skylab, 1973-1974 375
Theories, to 1970 48
Unmanned space flight. Voyager 1 & Voyager 2. Time capsules 366
Photographs taken from artificial satellites
Planets. Mercury, Venus & Jupiter 228
Photographs taken from artificial satellites. Surface
features. Earth 320
Photographs taken from Mariner 10
Planets: Mercury. Surface features 239
Photographs taken from Mariner 6. Surface features. Mars
Photographs taken from Mariners 6 & 7 248
Photographs taken from Mariner 7. Surface features. Mars
Photographs taken from Mariners 6 & 7 248

Photographs taken from space vehicles
  Earth. Surface features 321
  Jupiter. Surface features 252
  Moon. Surface features 223
  Saturn. Surface features 253
  Venus. Surface features 241
Photographs taken from Vikings 1 & 2
  Mars. Surface features 249
Photometry
  Applications in determination of distribution of OB stars 278
Photospheres. Stars
  Observation & analysis 288
Photovisual magnitude. Stars
  - Atlases 289
Physical properties. Galaxies
  - Conference proceedings 187
Physical properties. Matter. Interstellar space
  - Conference proceedings 190
Physical properties. Planets. Solar system 234
Physical properties. Radio galaxies 196
Physical properties. Tektites 262
Physics
  Cosmic physics - Serials 142
Planetariums
  To 1977 135
Planets
  Atmosphere 226
  Dynamics 227
  Orbits 229
  Orbits. Calculation (Kepler's laws). Applications of digital computer systems 56
  Origins. Theories, to 1977 67
Planets. Solar system 231
  - Conference proceedings 232
  Close-range gravitational interactions with astronomical bodies 59
  Giant planets. Chemical constituents - Conference proceedings 230
  Motion. Theories - Early works 60
  Observations. Effects of ephemeris time, ca B.C.2000-A.D.1019 236
  Origins 61
  Polarity 233
  Retrograde motion 62
  Structure & physical properties 234
  Tangential velocity. Theories 63
  Terrestrial planets 235
Planets. Solar system. Northern hemisphere
  - Charts 257
Planispheric astrolabes 100
Plasma processes. Astrophysics 140
Plasmas
  Astrophysical aspects 143
  Turbulence. Theories. Applications in astrophysics 138
Plasmas. Interplanetary space
  Observation. Equipment & techniques 182
Plasmas. Solar system 212
Pluto
  Discovery - Personal observations 256
Polarity. Planets. Solar system 233
Policies. Government. United States
  Policies, to 1975 on astronautics 350
Pre-Columbian America
  Astronomy - Conference proceedings 45
Pre-Columbian Mexico
  Astronomy - Conference proceedings 46
Procyon
  Spectra - Illustrations 294
Project Daedalus 351
Projects. Astronomy 7
Proper motion. Star clusters 306
Proper motion. Stars 291
Proper motion. Stars in region of galactic equator at longitude 140 292

Propulsion. Rockets. Aerospace vehicles 415
Ptolemaeus, Claudius
  Astronomical observations 79
Pulsars 130
Pulsating stars 297
Quasi-stellar objects
  Nuclei - Conference proceedings 131
Radiation. Astronomical bodies 157
Radiation. Galaxies
  Redshifts. Interpretation 207
  Redshifts. Interpretation - Conference proceedings 154
Radio frequency radiation. Astronomical bodies
  Recombination lines - Conference proceedings 158
Radio galaxies
  Physical properties 196
Radioastronomy 108
  To 1974 109
  To 1977 110
  Solar radioastronomy, to 1978 271
Radioastronomy. Great Britain 111
  To 1975 112
Radiotelescopes. Edinburgh
  Organisation: Royal Observatory, Edinburgh. U.K. Infrared Telescope Unit - Serials 96
Recombination lines. Radio frequency radiation. Astronomical bodies
  - Conference proceedings 158
Redshifts. Radiation from galaxies
  Interpretation 207
  Interpretation - Conference proceedings 154
Relativistic astrophysics 144
  Use of space vehicles - Conference proceedings 145
Remote sensing. Surface features. Mars
  Mariner 9. Vidicons 250
Retrograde motion. Planets. Solar system 62
Rockets. Aerospace vehicles
  To 1974 416
  To 1977 417
  Development, to 1969 419
  Propulsion 415
Rotating stars
  Theories, 1611-1976 290
Rotation. Earth
  - Conference proceedings 328
  - For geophysics 330
  Rotation & orbit 326
  Variation 329
Royal Greenwich Observatory 86
  - Serials 87
  1676 84
  To 1946 85
  To 1975 88
Royal Observatory, Edinburgh
  - Serials 83
  To 1972 - Conference proceedings 82
Royal Observatory, Edinburgh. U.K. Infrared Telescope Unit
  - Serials 96
Russian artificial satellites
  To 1970 402
Satellites
  Artificial satellites 398
  Artificial satellites - For children 399
  Artificial satellites - Tables 401
  Artificial satellites. Dynamics - French texts 413
  Artificial satellites. Observation - Amateurs' manuals 400
  Motion - Conference proceedings 319
  Russian artificial satellites, to 1970 402
Satellites. Jupiter
  Orbits 251
Saturn
  Observation, to 1960 254
  Surface features - Photographs taken from space vehicles 253
Science Research Council (Great Britain). Solar System Committee
  - Serials 215

Secondary schools
Astronautics. Mathematics - For secondary school teaching 337
Secondary schools. Great Britain
Curriculum subjects: Space flight - For teaching 358
Selection. Astronomical optical telescopes
- Amateurs' manuals 91
Shape. Earth
Theories, to 1969 - For children 325
Simulation. Galaxy
Use of monuments, ca B.C.2500 198
Simulation. Solar system
Use of Stonehenge 213
Singularities. Astronomical bodies 121
Size. Earth
Theories, to 1969 - For children 325
Skylab. Manned space flight. Outer space 374
1973-1974 375
Small Magellanic Cloud
- Atlases 197
Solar radioastronomy
To 1978 271
Solar system 208
- For children 209
- For schools 210
- Questions & answers 216
- Serials 214
Electrons. Charge. Variation 161
Giant planets. Chemical constituents - Conference proceedings 230
Measurement 211
Origins 57
Origins - Conference proceedings 58
Planets 231
Planets - Conference proceedings 232
Planets. Close-range gravitational interactions with astronomical bodies 59
Planets. Motion. Theories - Early works 60
Planets. Observations. Effects of ephemeris time, ca B.C.2000-A.D.1019 236
Planets. Origins 61
Planets. Polarity 233
Planets. Retrograde motion 62
Planets. Structure & physical properties 234
Planets. Tangential velocity. Theories 63
Plasmas 212
Research organisations: Science Research Council (Great Britain). Solar System Committee - Serials 215
Simulation. Use of Stonehenge 213
Terrestrial planets 235
Theories 64
Theories. Influence of interplanetary exploration, to 1978 65
Theories of Hoerbiger, Hans 66
Solar system. Northern hemisphere
Planets - Charts 257
Sources of H-alpha radiation. Large Magellanic Cloud
- Charts 192
South Africa
Astronomy, to 1976 44
Soviet astronauts
To 1977 - Biographies 388
Soviet space flight
To 1978 363
Soviet Union
Astronautics, to 1972 349
Soyuz 19
Manned space flight. Link-up with Apollo, 1975 397
Space flight 353
- For children 355
- Forecasts 356
To 1975 - For children 361
To 1977 359
To 1977 - For children 362
To 1978 360
Applications of human levitation 354

Space flight
Dynamics 364
Economic aspects, to 1972 422
Interstellar manned space flight 376
Interstellar space flight. Feasibility studies: Project Daedalus 351
Manned space flight 377
Manned space flight - Illustrations 380
Manned space flight, to 1970 382
Manned space flight, to 1974 383
Manned space flight, to 1975 - For children 384
Manned space flight, to 1976 385
Manned space flight, to 1978 386
Manned space flight, to 1980 381
Manned space flight. Apollo. Link-up with Soyuz 19, 1975 397
Manned space flight. Apollo-Soyuz Test Project 378
Soviet space flight, to 1978 363
Trajectories. Optimisation 365
Unmanned space flight, to 1973 367
Space flight. Curriculum subjects. Secondary schools. Great Britain
- For teaching 358
Space flight. Mars
Unmanned space flight. Viking Mars Program 371
Space flight. Mercury. Planets
Mariner 10 369
Space flight. Moon
To 1967 368
Manned space flight - For children 396
Manned space flight. Apollo 11 389
Manned space flight. Apollo 12 390
Manned space flight. Apollo 13 391
Manned space flight. Apollo 14 379
Manned space flight. Apollo 15 392
Manned space flight. Apollo 16 393
Manned space flight. Apollo 17 394
Manned space flight. Apollo Project compared with paintings of manned space flight by Smith, Ralph A, 1945-1955 395
Space flight. Outer space
Manned space flight. Skylab 374
Manned space flight. Skylab, 1973-1974 375
Unmanned space flight. Voyager 1 & Voyager 2. Time capsules 366
Space flight. Venus
Mariner 10 370
Space shuttles 372
- For children 373
Space vehicles
- Conference proceedings 403
- Forecasts 412
- Illustrations - For children 406
- Technical data 405
To 1975 - For children 408
To 1975 - For schools 409
To 1978 410
To 1979 - For children 411
Astronauts. Living conditions 421
Automatic control - Conference proceedings 414
Control 357
Electric propulsion systems - Conference proceedings 420
Temperature. Control. Applications of heat transfer - Conference proceedings 407
Thermal properties - Conference proceedings 404
Use in relativistic astrophysics - Conference proceedings 145
Spectra. Procyon
- Illustrations 294
Spectra. Stars
Energy. Distribution - For spectrophotometric observations 309
Spectra. Ultraviolet spectroscopy. Stars
Energy. Distribution - Tables 310
Spectrometers
Astronomical spectrometers 106
Spectrophotometric observations
Stars. Spectra. Energy. Distribution - For spectrophotometric observations 309

Spectroscopy. Cool stars
  Near infrared spectroscopy 308
Spectroscopy. Stars
  Ultraviolet spectroscopy. Spectra. Energy. Distribution
   - Tables 310
Spherical astronomy 115
Star clusters
  Proper motion 306
Stars 279
  - Atlases 317
  - Atlases - For celestial navigation 318
  - For children 282
  - Tables - For land surveying 312
  Atmospheres. Observation. Equipment & techniques 280
  Cool stars. Near infrared spectroscopy 308
  Evolution 281
  Flare stars 300
  Formation 283
  Identification 285
  Identification - Tables 311
  Interiors 284
  Nebular variable stars 295
  Neutron stars - Conference proceedings 301
  Neutron stars. Structure & properties 302
  OB stars. Distribution. Determination. Applications of
   photometry 278
  Photospheres. Observation & analysis 288
  Photovisual magnitude - Atlases 289
  Proper motion 291
  Pulsating stars 297
  Rotating stars. Theories, 1611-1976 290
  Spectra. Energy. Distribution - For spectrophotometric
   observations 309
  Stars in region of galactic equator at longitude 140.
   Proper motion 292
  Ultraviolet spectroscopy. Spectra. Energy. Distribution
   - Tables 310
  Use in instantaneous interstellar space flight 336
  Variable stars. Observation - Amateurs' manuals 296
Sumerian astronomers
  Observation of Vela X 305
Sun 266
  - For children 268
  - For schools - Welsh texts 269
  Chromosphere 274
  Chromosphere. Disturbances 275
  Eclipses - Anthroposophical viewpoints 276
  Eclipses. Forecasting. Use of Stonehenge 277
  Evolution 267
  Life cycle 270
  Noise storms 272
Sunspots 273
Supernovae 304
  Observation by Far Eastern astronomers, to 1976 303
Surface features. Earth
  - Photographs taken from space vehicles 321
  Photographs taken from artificial satellites 320
Surface features. Jupiter
  - Photographs taken from space vehicles 252
Surface features. Mars 243
  - For children 244
  - Photographs taken from Vikings 1 & 2 249
  Observation, to 1977 245
  Observation, to 1980 246
  Observation, to ca 1930 247
  Photographs taken from Mariners 6 & 7 248
  Remote sensing. Mariner 9. Vidicons 250
Surface features. Mercury. Planets 238
  - Photographs taken from Mariner 10 239
Surface features. Moon 221
  - Photographs taken from space vehicles 223
  Observation - Amateurs' manuals 222
Surface features. Saturn
  - Photographs taken from space vehicles 253

Surface features. Venus 240
- Photographs taken from space vehicles 241
Surveying. Land
Stars - Tables - For land surveying 312
Tangential velocity. Planets. Solar system
Theories 63
Teaching
Great Britain. Secondary schools. Curriculum subjects:
Space flight - For teaching 358
Teaching. Secondary schools
Astronautics. Mathematics - For secondary school teaching 337
Tektites
Structure & physical properties 262
Telescopes
Astronomical optical telescopes 89
Astronomical optical telescopes - Amateurs' manuals 90
Astronomical optical telescopes. Selection & testing
- Amateurs' manuals 91
Astronomical optical telescopes. Use - Amateurs' manuals 92
Astronomical telescopes - For children 93
Astronomical telescopes, to 1953 94
Astronomical telescopes, to 1975 95
Astronomical telescopes. Use in observation of astronomical
bodies - Study examples: Crab Nebula 200
Telescopes. Mount Palomar. California
Astronomical telescopes: 200-inch Hale telescope 97
Temperature. Space vehicles
Control. Applications of heat transfer - Conference
proceedings 407
Terrestrial planets. Solar system 235
Theoretical physics. Applications in astrophysics 137
Theory of the moon's motion. Newton, Sir Isaac. Motion.
Moon
- Critical studies 224
Thermal properties. Space vehicles
- Conference proceedings 404
Time capsules. Voyager I & Voyager 2. Unmanned space
flight. Outer space 366
Trajectories. Space flight
Optimisation 365
Turbulence. Plasmas
Theories. Applications in astrophysics 138
Ultraviolet spectroscopy. Stars
Spectra. Energy. Distribution - Tables 310
United States
Government. Policies on astronautics, to 1975 350
Universe 168
- For children 169
- Illustrations 175
To 1977 179
To 1978 180
Boundaries 205
Mathematical models 174
Structure 181
Theories 170
Theories - Early works 171
Theories, ca B.C.3000-A.D.1687 178
Theories of ancient civilizations 172
Universe visible from the southern hemisphere. Study
regions
Descriptive astronomy 127
University of Cambridge. Institute of Astronomy
- Serials 20
Unmanned space flight. Mars
Viking Mars Program 371
Unmanned space flight. Outer space
Voyager 1 & Voyager 2. Time capsules 366
Ursa Major 287
Variable stars
Nebular variable stars 295
Observation - Amateurs' manuals 296
Variation. Charge. Electrons. Solar system 161
Variation. Cosmic rays. Outer space 163
Variation. Light. Eclipsing binary stars 298

Variation. Rotation. Earth 329
Vela X
  Observation by Sumerian astronomers 305
Velikovsky, Immanuel
  Theories of origins of Venus - Critical studies 68
  Theories of origins of Venus. Criticism, 1950-1977 69
Venus
  Mercury, Venus & Jupiter - Photographs taken from artificial satellites 228
  Origins. Theories of Velikovsky, Immanuel - Critical studies 68
  Origins. Theories of Velikovsky, Immanuel. Criticism, 1950-1977 69
  Space flight. Mariner 10 370
  Surface features 240
  Surface features - Photographs taken from space vehicles 241
Vidicons. Mariner 9
  Remote sensing of surface features of Mars 250
Viking Mars Program. Mars
  Unmanned space flight 371
Voyager 1. Unmanned space flight. Outer space
  Time capsules 366
Voyager 2. Unmanned space flight. Outer space
  Time capsules 366
White dwarfs. Stars
  Structure 286
White holes 132
X-ray astronomy 113
  - Conference proceedings 114
X-ray astronomy. Great Britain 105

APPENDIX C

ENGLISH ANALYSIS/SYNTHESIS DICTIONARY

& Syntactic cats : co

* Syntactic cats : co

200-inch Hale telescope Syntactic cats : nn
Meaning no.1 : argument SRs : phy 2 uni 2
Number : si

active Syntactic cats : ad

aerodynamics Syntactic cats : no
Meaning no.1: predicate agent : phy 2 pot 1 uni 1
Number : si

aerospace Syntactic cats : ad

Aldrin, Edwin Eugene Syntactic cats : nn
Meaning no.1 : argument SRs : bio 2 ani 2 hum 2 pot 2 uni 2 Number : si

Algol Syntactic cats : np
Meaning no.1 : argument SRs : phy 2 pla 2 uni 2
Number : si

amateur Syntactic cats : ad

amateurs' Syntactic cats : ad

America Syntactic cats : np
Meaning no.1 : argument SRs : pla 2 uni 2
Number : si

American Syntactic cats : ad

Amesbury Syntactic cats : np
Meaning no.1 : argument SRs : pla 2 uni 2
Number : si

analysis Syntactic cats : no
Meaning no.1: predicate agent : bio 2 ani 2 hum 2 pot 2 uni 1 Preps : by patient : bio 1 ani 1 hum 1 phy 1 abs 1 pot 1 uni 1 pre 1 Preps : of instrument : pre 2 Number : si

ancient Syntactic cats : ad

answers Syntactic cats : no
Meaning no.1 : argument SRs : abs 2 Number : si

anthroposophical Syntactic cats : ad

Apollo Syntactic cats : nn

* * * continued * * *

* * * continuation * * *
Meaning no.1 : argument SRs : phy 2 pot 2 uni 2
Number : si

Apollo 11 Syntactic cats : nn
Meaning no.1 : argument SRs : phy 2 pot 2 uni 2
Number : si

Apollo 12 Syntactic cats : nn
Meaning no.1 : argument SRs : phy 2 pot 2 uni 2
Number : si

Apollo 13 Syntactic cats : nn
Meaning no.1 : argument SRs : phy 2 pot 2 uni 2
Number : si

Apollo 14 Syntactic cats : nn
Meaning no.1 : argument SRs : phy 2 pot 2 uni 2
Number : si

Apollo 15 Syntactic cats : nn
Meaning no.1 : argument SRs : phy 2 pot 2 uni 2
Number : si

Apollo 16 Syntactic cats : nn
Meaning no.1 : argument SRs : phy 2 pot 2 uni 2
Number : si

Apollo 17 Syntactic cats : nn
Meaning no.1 : argument SRs : phy 2 pot 2 uni 2
Number : si

Apollo Project Syntactic cats : nn
Meaning no.1 : argument SRs : abs 1 pot 2 uni 2
Number : si

Apollo-Soyuz Test Project Syntactic cats : nn
Meaning no.1 : argument SRs : abs 2 pot 2 uni 2
Number : si

applications Syntactic cats : no
Meaning no.1: predicate agent : bio 2 ani 2 hum 2
pot 2 uni 1 patient : phy 1 abs 1 pot 1 uni 1 pre 1
Preps : of beneficiary : pre 2 Preps : in
Number : pl

artificial Syntactic cats : ad

aspects Syntactic cats : no
Meaning no.1 : argument SRs : abs 2 Number : pl

associated Syntactic cats : ve
Meaning no.1: predicate agent : bio 2 ani 2 hum 2 pot 1 uni 1 patient : bio 1 ani 1 hum 1 phy 1 abs 1 pla 1 pot 1 uni 1 Preps : with beneficiary : bio 1 ani 1 hum 1 phy 1 abs 1 pla 1 pot 1 uni 1 pre 1

astrolabes Syntactic cats : no
Meaning no.1 : argument SRs : phy 2 Number : pl

astrology Syntactic cats : no
Meaning no.1: predicate agent : bio 2 ani 2 hum 2 uni 1 Number : si

astronautics Syntactic cats : no
Meaning no.1: predicate agent : bio 1 ani 1 hum 1 pot 1 uni 1 Number : si

astronauts Syntactic cats : no
Meaning no.1 : argument SRs : bio 2 ani 2 hum 2 pot 2 Number : si

astronomers Syntactic cats : no
Meaning no.1 : argument SRs : bio 2 ani 2 hum 2 pot 2 Number : pl

astronomical Syntactic cats : ad

astronomy Syntactic cats : no
Meaning no.1: predicate agent : bio 2 ani 2 hum 2 uni 1 Number : si

astrophysical Syntactic cats : ad

astrophysics Syntactic cats : no ad
Meaning no.1: predicate agent : bio 2 ani 2 hum 2 pot 1 uni 1 Number : si

at Syntactic cats : pr

atlases Syntactic cats : no
Meaning no.1 : argument SRs : phy 2 Number : pl

atmosphere Syntactic cats : no
Meaning no.1 : argument SRs : phy 2 pla 1 Number : si

atmospheres Syntactic cats : no
Meaning no.1 : argument SRs : phy 2 Number : pl

automatic Syntactic cats : ad

Avon Syntactic cats : np

* * * continued * * *

* * * continuation * * *
Meaning no.1 : argument SRs : pla 2 uni 2
Number : si

Bath Syntactic cats : np
Meaning no.1 : argument SRs : pla 2 uni 2
Number : si

binary Syntactic cats : ad

biographies Syntactic cats : no
Meaning no.1 : argument SRs : abs 2 Number : pl

black Syntactic cats : ad

bodies Syntactic cats : no
Meaning no.1 : argument SRs : bio 1 ani 1 hum 1 phy 2 pot 2 Number : pl

boundaries Syntactic cats : no
Meaning no.1 : argument SRs : abs 1 pla 1
Number : pl

British Syntactic cats : ad

British Museum (Natural History) Syntactic cats : nn
Meaning no.1 : argument SRs : pla 2 uni 2
Number : si

by Syntactic cats : pr

calculation Syntactic cats : no
Meaning no.1: predicate agent : bio 2 ani 2 hum 2 pot 2 uni 1 Preps : by patient : phy 1 abs 1 pot 1 uni 1 pre 1 Preps : of instrument : phy 1 abs 1 pot 1 uni 1 pre 1 Preps : by location : pla 2 pot 1 uni 1 Preps : at Number : si

calculations Syntactic cats : no
Meaning no.1 : argument SRs : abs 2
Meaning no.2: predicate agent : bio 2 ani 2 hum 2 pot 2 uni 1 Preps : by patient : phy 1 abs 1 pot 1 uni 1 pre 1 Preps : of instrument : phy 1 abs 1 pot 1 uni 1 pre 1 Preps : by location : pla 2 pot 1 uni 1 Preps : at Number : pl

calculators Syntactic cats : no
Meaning no.1 : argument SRs : phy 2 pot 2
Number : pl

California Syntactic cats : np ad

* * * continued * * *

* * * continuation * * *
Meaning no.1 : argument SRs : pla 2 uni 2
Number : si

Cambridge Syntactic cats : np
Meaning no.1 : argument SRs : pla 2 uni 2
Number : si

Cambridgeshire Syntactic cats : np
Meaning no.1 : argument SRs : pla 2 uni 2
Number : si

capsules Syntactic cats : no
Meaning no.1 : argument SRs : phy 2 Number : pl

career Syntactic cats : ad no
Meaning no.1 : argument SRs : abs 2 Number : si

catalogues Syntactic cats : no
Meaning no.1 : argument SRs : phy 2 Number : pl

celestial Syntactic cats : ad

charge Syntactic cats : no
Meaning no.1 : argument SRs : phy 2 pot 2
Number : si

charts Syntactic cats : no
Meaning no.1 : argument SRs : phy 2 Number : pl

chemical Syntactic cats : ad

children Syntactic cats : no
Meaning no.1 : argument SRs : bio 2 ani 2 hum 2 pot 2 Number : pl

China Syntactic cats : np
Meaning no.1 : argument SRs : pla 2 uni 2
Number : si

chromosphere Syntactic cats : no
Meaning no.1 : argument SRs : phy 2 Number : si

civilizations Syntactic cats : no
Meaning no.1 : argument SRs : bio 1 ani 1 hum 1 abs 1 pot 1 Number : pl

close-range Syntactic cats : ad

clouds Syntactic cats : no
Meaning no.1 : argument SRs : phy 2 Number : pl

clusters Syntactic cats : no
Meaning no.1 : argument SRs : phy 2 Number : pl

Collins, Michael, b.1930 Syntactic cats : nn
Meaning no.1 : argument SRs : bio 2 ani 2 hum 2 pot 2 uni 2 Number : si

comets Syntactic cats : no
Meaning no.1 : argument SRs : phy 2 pot 2
Number : pl

compared Syntactic cats : ve
Meaning no.1: predicate agent : bio 2 ani 2 hum 2 pot 2 uni 1 Preps : by patient : phy 1 abs 1 pla 1 pot 1 uni 1 pre 1 beneficiary : phy 1 abs 1 pla 1 pot 1 uni 1 pre 1 Preps : with

composition Syntactic cats : no
Meaning no.1: predicate agent : bio 2 ani 2 hum 2 uni 1 Preps : by patient : phy 1 abs 1 pot 1 uni 1 Preps : of Number : si

computer Syntactic cats : ad no
Meaning no.1 : argument SRs : phy 2 pot 2
Number : si

conditions Syntactic cats : no
Meaning no.1: predicate agent : bio 1 ani 1 hum 1 phy 1 pla 1 pot 1 uni 1 Number : pl

conference Syntactic cats : no ad
Meaning no.1 : argument SRs : abs 2 Number : si

constellations Syntactic cats : no
Meaning no.1 : argument SRs : phy 2 pla 1
Number : pl

constituents Syntactic cats : no
Meaning no.1 : argument SRs : phy 2 Number : pl

control Syntactic cats : ad no
Meaning no.1: predicate agent : bio 2 ani 2 hum 2 pot 1 uni 1 Preps : n beneficiary : bio 1 ani 1 hum 1 phy 1 abs 1 pla 1 pot 1 uni 1 pre 1 Preps : of Number : si

cool Syntactic cats : ad

Copernicus, Nicolaus Syntactic cats : nn
Meaning no.1 : argument SRs : bio 2 ani 2 hum 2 pot 2 uni 2 Number : si

core Syntactic cats : no
Meaning no.1 : argument SRs : phy 2 pot 1
Number : si

cosmic Syntactic cats : ad

cosmogony Syntactic cats : no
Meaning no.1: predicate agent : bio 2 ani 2 hum 2
pot 2 uni 1 Number : si

cosmography Syntactic cats : no
Meaning no.1: predicate agent : bio 2 ani 2 hum 2
pot 1 uni 1 Number : si

cosmology Syntactic cats : no
Meaning no.1: predicate agent : bio 2 ani 2 hum 2
pot 1 uni 1 Number : si

COSMOS Facility Syntactic cats : nn
Meaning no.1 : argument SRs : phy 2 pot 2 uni 2
Number : si

Crab Nebula Syntactic cats : np
Meaning no.1 : argument SRs : phy 2 pla 2 uni 2
Number : si

critical Syntactic cats : ad

criticism Syntactic cats : no
Meaning no.1: predicate agent : bio 2 ani 2 hum 2
pot 2 uni 1 Preps : by patient : bio 1 ani 1
hum 1 phy 1 abs 1 pla 1 pot 1 uni 1 pre 1 Preps :
of instrument : abs 1 uni 1 pre 1 Preps : by
Number : si

cultural Syntactic cats : ad

curriculum Syntactic cats : ad no
Meaning no.1 : argument SRs : abs 2 Number : si

cycle Syntactic cats : no
Meaning no.1 : argument SRs : phy 1 abs 1 pot 1
Number : si

data Syntactic cats : no ad
Meaning no.1 : argument SRs : abs 2 Number : pl

density Syntactic cats : no
Meaning no.1 : argument SRs : phy 2 Number : si

descriptive Syntactic cats : ad

determination Syntactic cats : no
Meaning no.1: predicate agent : bio 2 ani 2 hum 2
pot 2 uni 1 Preps : by patient : phy 1 abs 1
uni 1 pre 1 Preps : of instrument : phy 1 abs 1
uni 1 pre 1 Preps : by Number : si

development Syntactic cats : no
Meaning no.1: predicate agent : bio 2 ani 2 hum 2
pot 2 uni 1 Preps : by beneficiary : phy 1 abs
1 pla 1 pot 1 uni 1 pre 1 Preps : of Number :
si

dials Syntactic cats : no
Meaning no.1 : argument SRs : phy 2 Number : pl

digital Syntactic cats : ad

dimensions Syntactic cats : no
Meaning no.1 : argument SRs : phy 2 Number : pl

disasters Syntactic cats : no
Meaning no.1 : argument SRs : abs 2 pot 2
Number : pl

discovery Syntactic cats : no
Meaning no.1: predicate agent : bio 2 ani 2 hum 2
pot 2 uni 1 Preps : by beneficiary : phy 1 abs
1 pla 1 uni 1 Preps : of instrument : phy 2 pot
1 uni 1 pre 1 Number : si

distribution Syntactic cats : no
Meaning no.1: predicate agent : bio 2 ani 2 hum 2
pot 2 uni 1 Preps : by patient : phy 1 abs 1
pla 1 pot 1 uni 1 Preps : of instrument : pre 2
Number : si

disturbances Syntactic cats : no
Meaning no.1 : argument SRs : phy 2 pot 2
Number : pl

dusts Syntactic cats : no
Meaning no.1 : argument SRs : phy 2 Number : pl

dwarfs Syntactic cats : no
Meaning no.1 : argument SRs : phy 2 pla 2 pot 1
Number : pl

dynamics Syntactic cats : no
Meaning no.1 : argument SRs : abs 2 Number : pl

dynamo Syntactic cats : ad no
Meaning no.1 : argument SRs : phy 2 pot 2
Number : si

Dyson, Freeman John Syntactic cats : nn
Meaning no.1 : argument SRs : bio 2 ani 2 hum 2 pot 2 uni 2 Number : si

early Syntactic cats : ad

earth Syntactic cats : np
Meaning no.1 : argument SRs : phy 2 pla 2 pot 2 uni 2 Number : si

earth's Syntactic cats : ad

East Sussex Syntactic cats : np
Meaning no.1 : argument SRs : pla 2 uni 2
Number : si

eastern Syntactic cats : ad

eclipses Syntactic cats : no
Meaning no.1 : argument SRs : abs 2
Meaning no.2: predicate agent : phy 2 pla 2 pot 2 uni 1 Preps : of Number : pl

eclipsing Syntactic cats : ad

economic Syntactic cats : ad

Edinburgh Syntactic cats : np
Meaning no.1 : argument SRs : pla 2 uni 2
Number : si

effects Syntactic cats : no
Meaning no.1: predicate agent : phy 1 abs 1 pot 1 uni 1 pre 1 Preps : of beneficiary : bio 1 ani 1 hum 1 phy 1 abs 1 pla 1 pot 1 uni 1 pre 1 Preps : on Number : pl

elasticity Syntactic cats : no
Meaning no.1 : argument SRs : phy 2 pot 2
Number : si

electric Syntactic cats : ad

electromagnetic Syntactic cats : ad

electronic Syntactic cats : ad

electrons Syntactic cats : no
Meaning no.1 : argument SRs : phy 2 pot 2
Number : pl

encyclopaedias Syntactic cats : no
Meaning no.1 : argument SRs : abs 2 Number : pl

energy Syntactic cats : no ad
Meaning no.1 : argument SRs : phy 2 pot 2
Number : si

ephemeris Syntactic cats : no ad
Meaning no.1 : argument SRs : abs 2 Number : si

equator Syntactic cats : no
Meaning no.1 : argument SRs : pla 2 uni 1
Number : si

equinoctial Syntactic cats : ad

equipment Syntactic cats : no
Meaning no.1 : argument SRs : phy 2 Number : si

Europe Syntactic cats : np
Meaning no.1 : argument SRs : pla 2 uni 2
Number : si

European Space Agency Syntactic cats : nn
Meaning no.1 : argument SRs : abs 2 pot 1 uni 2
Number : si

evolution Syntactic cats : no
Meaning no.1: predicate agent : bio 1 ani 1 hum 1
phy 1 abs 1 pla 1 pot 1 uni 1 Number : si

examples Syntactic cats : no
Meaning no.1 : argument SRs : abs 2 Number : pl

exhibits Syntactic cats : no
Meaning no.1 : argument SRs : phy 2 Number : pl

exploration Syntactic cats : no
Meaning no.1: predicate agent : bio 2 ani 2 hum 2
pot 2 uni 1 Preps : by patient : phy 1 pla 2
pot 1 uni 1 Preps : of instrument : pre 1
Number : si

extragalactic Syntactic cats : ad

eye Syntactic cats : no ad
Meaning no.1 : argument SRs : bio 2 ani 2 hum 1
Number : si

facsimiles Syntactic cats : no
Meaning no.1 : argument SRs : phy 2 Number : pl

far Syntactic cats : ad

feasibility Syntactic cats : ad

features Syntactic cats : no
Meaning no.1 : argument SRs : phy 2 Number : pl

festschriften Syntactic cats : no
Meaning no.1 : argument SRs : phy 2 Number : pl

fields Syntactic cats : no
Meaning no.1 : argument SRs : phy 2 pla 1
Number : pl

flare Syntactic cats : ad

flight Syntactic cats : no
Meaning no.1: predicate agent : bio 1 ani 1 hum 1
phy 1 pot 2 uni 1 to loc. : phy 2 pla 2 pot 1 uni 1
Preps : to Number : si

for Syntactic cats : pr

forecasting Syntactic cats : no
Meaning no.1: predicate agent : bio 2 ani 2 hum 2
pot 2 uni 1 Preps : by patient : phy 1 pot 1
uni 1 pre 1 Preps : of instrument : phy 1 abs 1
pla 1 pot 1 uni 1 pre 1 Preps : by Number : si

forecasts Syntactic cats : no
Meaning no.1 : argument SRs : abs 2 Number : pl

formation Syntactic cats : no
Meaning no.1: predicate agent : bio 2 ani 2 hum 2
pot 2 uni 1 Preps : by patient : phy 1 abs 1
pot 1 uni 1 Preps : of instrument : phy 1 abs 1
pot 1 uni 1 pre 1 Preps : by with Number : si

French Syntactic cats : ad

frequency Syntactic cats : ad

from Syntactic cats : pr

galactic Syntactic cats : ad

galaxies Syntactic cats : no
Meaning no.1 : argument SRs : phy 2 pla 2 pot 1
Number : pl

Galaxy Syntactic cats : np
Meaning no.1 : argument SRs : phy 2 pla 2 pot 2 uni
2 Number : si

Galilei, Galileo Syntactic cats : nn
Meaning no.1 : argument SRs : bio 2 ani 2 hum 2 pot
2 uni 2 Number : si

gamma Syntactic cats : ad

general theory of relativity Syntactic cats : nn
Meaning no.1 : argument SRs : abs 2 uni 2
Number : si

geophysics Syntactic cats : no
Meaning no.1: predicate agent : bio 2 ani 2 hum 2
pot 2 uni 1 Number : si

giant Syntactic cats : ad

globular Syntactic cats : ad

government Syntactic cats : no
Meaning no.1 : argument SRs : abs 2 pot 2
Meaning no.2: predicate agent : bio 1 ani 1 hum 1
abs 1 pot 2 uni 1 beneficiary : bio 1 ani 1 hum 1
abs 1 pla 1 pot 1 uni 1 pre 1 Preps : of Number
: si

gravitational Syntactic cats : ad

Great Britain Syntactic cats : np
Meaning no.1 : argument SRs : pla 2 uni 2
Number : si

Great Pyramid Syntactic cats : nn
Meaning no.1 : argument SRs : phy 2 pla 2 uni 2
Number : si

Greenwich (London Borough) Syntactic cats : np
Meaning no.1 : argument SRs : pla 2 uni 2
Number : si

guides Syntactic cats : no
Meaning no.1 : argument SRs : abs 2
Meaning no.2 : argument SRs : bio 2 ani 2 hum 2
Number : pl

H-alpha Syntactic cats : ad

heat Syntactic cats : ad no
Meaning no.1 : argument SRs : phy 2 pot 2
Number : si

hemisphere Syntactic cats : no
Meaning no.1 : argument SRs : pla 2 Number : si

henge Syntactic cats : ad

Herschel, Sir John, 1st bart Syntactic cats : nn

* * * continued * * *

* * * continuation * * *
Meaning no.1 : argument SRs : bio 2 ani 2 hum 2 pot 2 uni 2 Number : si

Herstmonceaux Syntactic cats : np
Meaning no.1 : argument SRs : pla 2 uni 2
Number : si

high Syntactic cats : ad

Hoerbiger, Hans Syntactic cats : nn
Meaning no.1 : argument SRs : bio 2 ani 2 hum 2 pot 2 uni 2 Number : si

Holburne of Menstrie Museum Syntactic cats : np
Meaning no.1 : argument SRs : phy 2 pla 2 uni 2
Number : si

holes Syntactic cats : no
Meaning no.1 : argument SRs : phy 2 pla 2 pot 1
Number : pl

human Syntactic cats : ad

identification Syntactic cats : ad no
Meaning no.1: predicate agent : bio 2 ani 2 hum 1 pot 1 uni 1 Preps : by patient : bio 1 ani 1 hum 1 phy 1 abs 1 pla 1 pot 1 uni 1 pre 1 Preps : of beneficiary : bio 1 ani 1 hum 1 phy 1 abs 1 pla 1 pot 1 uni 1 pre 1 Preps : with instrument : phy 1 abs 1 pot 1 uni 1 pre 1 Preps : by with
Number : si

illustrations Syntactic cats : no
Meaning no.1 : argument SRs : phy 2 Number : pl

images Syntactic cats : no
Meaning no.1 : argument SRs : phy 1 abs 1
Number : pl

implications Syntactic cats : no
Meaning no.1: predicate patient : bio 1 ani 1 hum 1 phy 1 abs 1 pla 1 pot 1 uni 1 pre 1 Preps : of beneficiary : bio 1 ani 1 hum 1 phy 1 abs 1 pla 1 pot 1 uni 1 pre 1 Preps : for Number : pl

in Syntactic cats : pr

influence Syntactic cats : no ad
Meaning no.1: predicate patient : bio 1 ani 1 hum 1 phy 1 abs 1 pla 1 pot 1 uni 1 pre 1 Preps : of beneficiary : bio 1 ani 1 hum 1 phy 1 abs 1 pla 1 pot 1 uni 1 pre 1 Preps : on Number : si

infrared Syntactic cats : ad

instantaneous Syntactic cats : ad

institutions Syntactic cats : no
Meaning no.1 : argument SRs : abs 2 pot 2
Number : pl

instructions Syntactic cats : no
Meaning no.1 : argument SRs : abs 2 Number : pl

instrumentation Syntactic cats : ad no
Meaning no.1 : argument SRs : phy 2
Meaning no.2: predicate agent : bio 2 ani 2 hum 2
pot 2 uni 1 Preps : of by patient : phy 1 abs 1
pot 1 uni 1 Preps : of Number : si

intensity Syntactic cats : ad

interactions Syntactic cats : no
Meaning no.1: predicate agent : bio 1 ani 1 hum 1
phy 1 abs 1 pla 1 pot 1 uni 1 pre 1 Preps : of
beneficiary : bio 1 ani 1 hum 1 phy 1 abs 1 pla 1 pot 1
uni 1 pre 1 Preps : with Number : pl

interferometers Syntactic cats : no
Meaning no.1 : argument SRs : phy 2 pot 1
Number : pl

interiors Syntactic cats : no
Meaning no.1 : argument SRs : phy 2 pla 2
Number : pl

interplanetary Syntactic cats : ad

interpretation Syntactic cats : no
Meaning no.1: predicate agent : bio 2 ani 2 hum 2
pot 2 uni 1 Preps : by patient : phy 1 abs 1
pot 1 uni 1 pre 1 Preps : of instrument : pre 2
Number : si

interstellar Syntactic cats : ad

Irish Syntactic cats : ad no
Meaning no.1 : argument SRs : bio 2 ani 2 hum 2 pot
2 Number : si

iron Syntactic cats : no ad
Meaning no.1 : argument SRs : phy 2 Number : si

Irwin, James Benson Syntactic cats : nn
Meaning no.1 : argument SRs : bio 2 ani 2 hum 2 uni
2 Number : si

Islamic Syntactic cats : ad

items Syntactic cats : no
Meaning no.1 : argument SRs : phy 2 Number : pl

Japan Syntactic cats : np
Meaning no.1 : argument SRs : pla 2 uni 2
Number : si

Jupiter Syntactic cats : np
Meaning no.1 : argument SRs : phy 2 pla 2 uni 2
Number : si

Kensington and Chelsea (London Borough)
Syntactic cats : np
Meaning no.1 : argument SRs : pla 2 uni 2
Number : si

Kepler's Syntactic cats : ad

land Syntactic cats : ad no
Meaning no.1 : argument SRs : pla 2 Number : si

Large Magellanic Cloud Syntactic cats : np
Meaning no.1 : argument SRs : phy 2 pla 2 uni 2
Number : si

Latin-English Syntactic cats : ad

laws Syntactic cats : no
Meaning no.1 : argument SRs : abs 2 pot 2
Number : pl

levitation Syntactic cats : no
Meaning no.1: predicate agent : bio 2 ani 2 hum 2 pot 2 uni 1 Preps : by patient : bio 1 ani 1 hum 1 phy 1 pot 1 uni 1 Preps : of instrument : pre 2 Number : si

life Syntactic cats : ad no
Meaning no.1 : argument SRs : bio 2 ani 1 hum 1 pot 2 Number : si

light Syntactic cats : ad no
Meaning no.1 : argument SRs : phy 2 pot 2
Number : si

lines Syntactic cats : no
Meaning no.1 : argument SRs : phy 2 Number : pl

link-up Syntactic cats : no

* * * continued * * *

* * * continuation * * *
Meaning no.1: predicate agent : phy 2 pot 2 uni 1
Preps : by beneficiary : phy 2 pot 2 uni 1
Preps : with Number : si

living Syntactic cats : ad

London Syntactic cats : np
Meaning no.1 : argument SRs : pla 2 uni 2
Number : si

longitude 140 Syntactic cats : no
Meaning no.1 : argument SRs : pla 2 uni 2
Number : si

machinery Syntactic cats : no
Meaning no.1 : argument SRs : phy 2 pot 2
Number : si

magnetic Syntactic cats : ad

magnitude Syntactic cats : no
Meaning no.1 : argument SRs : abs 2 Number : si

man Syntactic cats : no
Meaning no.1 : argument SRs : bio 2 ani 2 hum 2 pot 2 Number : si

manned Syntactic cats : ad

manuals Syntactic cats : no
Meaning no.1 : argument SRs : abs 2 Number : pl

Mariner 10 Syntactic cats : nn
Meaning no.1 : argument SRs : phy 2 pot 2 uni 2
Number : si

Mariner 6 Syntactic cats : nn
Meaning no.1 : argument SRs : phy 2 pot 2 uni 2
Number : si

Mariner 7 Syntactic cats : nn
Meaning no.1 : argument SRs : phy 2 pot 2 uni 2
Number : si

Mariner 9 Syntactic cats : nn
Meaning no.1 : argument SRs : phy 2 pot 2 uni 2
Number : si

Mariners 6 & 7 Syntactic cats : nn
Meaning no.1 : argument SRs : phy 2 pot 2 uni 2
Number : si

Mars Syntactic cats : np
Meaning no.1 : argument SRs : phy 2 pla 2 uni 2
Number : si

masers Syntactic cats : no
Meaning no.1 : argument SRs : phy 2 pot 2
Number : pl

mathematical Syntactic cats : ad

mathematics Syntactic cats : no
Meaning no.1: predicate agent : bio 2 ani 2 hum 2
pot 2 uni 1 Number : si

matter Syntactic cats : no
Meaning no.1 : argument SRs : phy 2 Number : si

measurement Syntactic cats : no
Meaning no.1: predicate agent : bio 2 ani 2 hum 2
pot 2 uni 1 Preps : by patient : bio 1 ani 1
hum 1 phy 1 pla 1 uni 1 pre 1 Preps : of
instrument : phy 1 abs 1 pot 1 uni 1 pre 1 Number :
si

mechanics Syntactic cats : no
Meaning no.1 : argument SRs : bio 2 ani 2 hum 2 pot
2
Meaning no.2 : argument SRs : abs 1
Meaning no.3: predicate agent : bio 2 ani 2 hum 2
uni 1 patient : phy 2 pot 1 uni 1 pre 1 Preps :
of Number : pl

megalithic Syntactic cats : ad

Mercury Syntactic cats : np
Meaning no.1 : argument SRs : phy 2 pla 2 uni 2
Number : si

meteorites Syntactic cats : no
Meaning no.1 : argument SRs : phy 2 pot 1
Number : pl

meteors Syntactic cats : no
Meaning no.1 : argument SRs : phy 2 pot 1
Number : pl

Mexico Syntactic cats : np
Meaning no.1 : argument SRs : pla 2 uni 2
Number : si

Milky Way Syntactic cats : np
Meaning no.1 : argument SRs : phy 2 pla 2 uni 2
Number : si

model Syntactic cats : ad

models Syntactic cats : no
Meaning no.1 : argument SRs : phy 1 abs 1 pot 1
Number : pl

molecular Syntactic cats : ad

molecules Syntactic cats : no
Meaning no.1 : argument SRs : phy 2 pot 2
Number : pl

monuments Syntactic cats : no
Meaning no.1 : argument SRs : phy 2 pla 1 pot 1
Number : pl

moon Syntactic cats : ad np
Meaning no.1 : argument SRs : phy 2 pla 2 pot 2 uni
2 Number : si

motion Syntactic cats : no ad
Meaning no.1: predicate agent : bio 1 ani 1 hum 1
phy 1 pla 1 pot 2 uni 1 pre 1 Preps : of
location : bio 1 ani 1 hum 1 phy 1 pla 1 pot 1 uni 1
Preps : in Number : si

Mount Palomar Syntactic cats : nn
Meaning no.1 : argument SRs : pla 2 uni 2
Number : si

museums Syntactic cats : no
Meaning no.1 : argument SRs : pla 2 Number : pl

naked Syntactic cats : ad

navigation Syntactic cats : no
Meaning no.1: predicate agent : bio 2 ani 2 hum 1
pot 2 uni 1 Preps : by patient : pla 2 uni 1
Preps : of instrument : phy 1 pla 1 pot 1 uni 1 pre
1 Preps : by Number : si

near Syntactic cats : ad

nebular Syntactic cats : ad

nebulas Syntactic cats : no
Meaning no.1 : argument SRs : phy 2 pla 2
Number : pl

Neptune Syntactic cats : np
Meaning no.1 : argument SRs : phy 2 pla 2 uni 2
Number : si

Netherlands Syntactic cats : np
Meaning no.1 : argument SRs : pla 2 uni 2
Number : si

neutron Syntactic cats : ad no
Meaning no.1 : argument SRs : phy 2 pot 2
Number : si

Newton, Sir Isaac Syntactic cats : nn
Meaning no.1 : argument SRs : bio 2 ani 2 hum 2 pot 2 uni 2 Number : si

noise Syntactic cats : no ad
Meaning no.1 : argument SRs : phy 2 pot 2
Number : si

northern Syntactic cats : ad

novae Syntactic cats : no
Meaning no.1 : argument SRs : phy 2 pla 2 pot 1
Number : pl

nuclear Syntactic cats : ad

nuclei Syntactic cats : no
Meaning no.1 : argument SRs : phy 2 pot 2
Number : pl

nutation Syntactic cats : no
Meaning no.1: predicate agent : phy 2 pla 2 pot 2 uni 2 Number : si

OB Syntactic cats : ad

objects Syntactic cats : no
Meaning no.1 : argument SRs : phy 2 pot 1
Number : pl

observation Syntactic cats : no
Meaning no.1: predicate agent : bio 2 ani 2 hum 2 pot 2 uni 1 Preps : by patient : bio 1 ani 1 hum 1 phy 1 abs 1 pla 1 pot 1 uni 1 pre 1 Preps : of instrument : pre 1 from loc. : phy 1 pla 1 pot 1 uni 1 Preps : from Number : si

observations Syntactic cats : no
Meaning no.1 : argument SRs : abs 2
Meaning no.2: predicate agent : bio 2 ani 2 hum 2 pot 2 uni 1 Preps : by patient : bio 1 ani 1 hum 1 phy 1 abs 1 pla 1 pot 1 uni 1 pre 1 Preps : of instrument : pre 1 from loc. : phy 1 pla 1 pot 1 uni 1 Preps : from Number : pl

observatories Syntactic cats : no
Meaning no.1 : argument SRs : phy 2 Number : pl

of Syntactic cats : pr

on Syntactic cats : pr

Oort, Jan Hendrik Syntactic cats : nn
Meaning no.1 : argument SRs : bio 2 ani 2 hum 2 pot 2 Number : si

optical Syntactic cats : ad

optimisation Syntactic cats : no
Meaning no.1: predicate agent : bio 2 ani 2 hum 2 pot 2 uni 1 Preps : by patient : phy 1 abs 1 pot 1 uni 1 pre 1 Preps : of instrument : pre 2 Number : si

orbit Syntactic cats : no
Meaning no.1: predicate agent : phy 2 pla 2 pot 2 uni 1 Number : si

orbits Syntactic cats : no
Meaning no.1 : argument SRs : abs 1 Number : pl

organisation Syntactic cats : no ad
Meaning no.1: predicate agent : bio 2 ani 2 hum 2 pot 2 uni 1 Preps : by patient : bio 1 ani 1 hum 1 phy 1 abs 1 pla 1 pot 1 uni 1 pre 1 Preps : of location : pla 2 uni 1 Preps : in Number : si

organisations Syntactic cats : no
Meaning no.1 : argument SRs : abs 2 pot 1
Number : pl

origin Syntactic cats : no
Meaning no.1: predicate agent : bio 1 ani 1 hum 1 phy 1 abs 1 pla 1 pot 1 uni 1 pre 1 Preps : of
Number : si

origins Syntactic cats : no
Meaning no.1 : argument SRs : abs 2 Number : pl

outer Syntactic cats : ad

paintings Syntactic cats : no
Meaning no.1: predicate agent : bio 2 ani 2 hum 2 pot 2 uni 2 patient : bio 1 ani 1 hum 1 phy 1 pla 1 pot 1 uni 1 pre 1 Preps : of Number : pl

parallel Syntactic cats : ad

personal Syntactic cats : ad

photographs Syntactic cats : no
Meaning no.1: predicate agent : bio 2 ani 2 hum 2 pot 2 uni 1 Preps : by patient : bio 1 ani 1 hum 1 phy 1 pla 1 pot 1 uni 1 pre 1 Preps : of instrument : phy 2 pot 1 uni 1 pre 1 from loc. : pre 2
Meaning no.2 : argument SRs : phy 2 Number : pl

photometry Syntactic cats : no
Meaning no.1: predicate agent : bio 2 ani 2 hum 2 pot 2 uni 1 patient : phy 2 pot 1 uni 1 Number : si

photospheres Syntactic cats : no
Meaning no.1 : argument SRs : phy 2 Number : pl

photovisual Syntactic cats : ad

physical Syntactic cats : ad

physics Syntactic cats : no ad
Meaning no.1: predicate agent : bio 2 ani 2 hum 2 pot 2 uni 1 Number : pl

planetariums Syntactic cats : no
Meaning no.1 : argument SRs : phy 2 Number : pl

planets Syntactic cats : no
Meaning no.1 : argument SRs : phy 2 pla 1 pot 1 Number : pl

planispheric Syntactic cats : ad

plasma Syntactic cats : ad no
Meaning no.1 : argument SRs : phy 2 pot 1 Number : si

plasmas Syntactic cats : no
Meaning no.1 : argument SRs : phy 2 pot 2 Number : pl

Pluto Syntactic cats : np
Meaning no.1 : argument SRs : phy 2 pla 2 uni 2 Number : si

pocket Syntactic cats : ad

poems Syntactic cats : no
Meaning no.1 : argument SRs : abs 2 Number : pl

polarity Syntactic cats : no
Meaning no.1 : argument SRs : phy 2 pot 2
Number : si

policies Syntactic cats : no
Meaning no.1 : argument SRs : abs 2 pot 2
Meaning no.2: predicate agent : bio 1 ani 1 hum 1 abs 1 pot 2 uni 1 Preps : of beneficiary : bio 1 ani 1 hum 1 phy 1 abs 1 pla 1 pot 1 uni 1 pre 1
Preps : on Number : pl

Polish Syntactic cats : ad

pre-Columbian Syntactic cats : ad

proceedings Syntactic cats : no
Meaning no.1 : argument SRs : abs 2 Number : pl

processes Syntactic cats : no
Meaning no.1 : argument SRs : abs 1 pot 2
Number : pl

Procyon Syntactic cats : np
Meaning no.1 : argument SRs : phy 2 pla 2 uni 2
Number : si

programmed Syntactic cats : ad

Project Daedalus Syntactic cats : nn
Meaning no.1 : argument SRs : abs 2 uni 2
Number : si

projects Syntactic cats : no
Meaning no.1 : argument SRs : abs 2
Meaning no.2: predicate agent : bio 1 ani 1 hum 1 abs 1 pot 2 uni 1 Preps : by patient : bio 1 ani 1 hum 1 phy 1 abs 1 pla 1 pot 1 uni 1 pre 1
Preps : on instrument : pre 2 Number : pl

proper Syntactic cats : ad

properties Syntactic cats : no
Meaning no.1 : argument SRs : phy 2 Number : pl

propulsion Syntactic cats : ad no
Meaning no.1: predicate agent : phy 2 pot 2 uni 1 beneficiary : phy 2 pot 2 uni 1 Preps : of
Number : si

Ptolemaeus, Claudius Syntactic cats : nn
Meaning no.1 : argument SRs : bio 2 ani 2 hum 2 pot 2 uni 2 Number : si

pulsars Syntactic cats : no
Meaning no.1 : argument SRs : phy 2 pot 2
Number : pl

pulsating Syntactic cats : ad

quasi-stellar Syntactic cats : ad

questions Syntactic cats : no
Meaning no.1 : argument SRs : abs 2 Number : pl

radiation Syntactic cats : no
Meaning no.1 : argument SRs : pot 2
Meaning no.2: predicate agent : phy 2 pla 1 pot 2
uni 1 Preps : of by Number : si

radio Syntactic cats : no ad
Meaning no.1 : argument SRs : phy 2 Number : si

radioastronomy Syntactic cats : no
Meaning no.1: predicate agent : bio 2 ani 2 hum 2
pot 2 uni 1 Number : si

radiotelescopes Syntactic cats : no
Meaning no.1 : argument SRs : phy 2 Number : pl

ray Syntactic cats : ad

rays Syntactic cats : no
Meaning no.1 : argument SRs : phy 2 pot 2
Number : pl

recombination Syntactic cats : ad

redshifts Syntactic cats : no
Meaning no.1 : argument SRs : phy 2 pla 2 pot 1
Number : pl

refraction Syntactic cats : ad no
Meaning no.1: predicate agent : bio 2 ani 2 hum 2
pot 2 uni 1 patient : phy 1 abs 1 pot 1 uni 1
Preps : of instrument : phy 1 pot 1 uni 1 pre 1
Number : si

region Syntactic cats : no
Meaning no.1 : argument SRs : pla 2 Number : si

regions Syntactic cats : no
Meaning no.1 : argument SRs : pla 2 Number : pl

related Syntactic cats : ve

* * * continued * * *

* * * continuation * * *
Meaning no.1: predicate agent : bio 2 ani 2 hum 2 pot 2 uni 1 patient : phy 1 abs 1 pla 1 pot 1 uni 1 pre 1 beneficiary : phy 1 abs 1 pla 1 pot 1 uni 1 pre 1 Preps : to

relativistic Syntactic cats : ad

remote Syntactic cats : ad

research Syntactic cats : no ad
Meaning no.1: predicate agent : bio 1 ani 1 hum 1 abs 1 pot 2 uni 1 Preps : by patient : bio 1 ani 1 hum 1 phy 1 abs 1 pla 1 pot 1 uni 1 pre 1 Preps : on Number : si

retrograde Syntactic cats : ad

rockets Syntactic cats : no
Meaning no.1 : argument SRs : phy 2 pot 2 Number : pl

role Syntactic cats : no
Meaning no.1: predicate agent : bio 1 ani 1 hum 1 abs 1 pot 2 uni 1 pre 1 Preps : of beneficiary : pre 2 Preps : in Number : si

rotating Syntactic cats : ad

rotation Syntactic cats : no
Meaning no.1: predicate agent : phy 2 pla 1 pot 1 uni 1
Meaning no.2: predicate agent : bio 2 ani 2 hum 2 pot 1 uni 1 Preps : by patient : bio 2 Preps : of Number : si

Royal Greenwich Observatory Syntactic cats : nn
Meaning no.1 : argument SRs : phy 2 pla 2 pot 1 uni 2 Number : si

Royal Observatory, Edinburgh Syntactic cats : nn
Meaning no.1 : argument SRs : phy 2 pla 2 pot 1 uni 2 Number : si

Royal Observatory, Edinburgh. U.K. Infrared Telescope Unit Syntactic cats : nn
Meaning no.1 : argument SRs : phy 2 pla 2 uni 2 Number : si

Russian Syntactic cats : ad

satellites Syntactic cats : no

* * * continued * * *

* * * continuation * * *
Meaning no.1 : argument SRs : phy 2 pla 1 pot 1
Number : pl

Saturn Syntactic cats : np
Meaning no.1 : argument SRs : phy 2 pla 2 uni 2
Number : si

school Syntactic cats : ad no
Meaning no.1 : argument SRs : phy 2 pla 2 pot 1
Number : si

schools Syntactic cats : no
Meaning no.1 : argument SRs : phy 2 pla 1
Number : pl

Science Research Council (Great Britain). Solar System Committee Syntactic cats : nn
Meaning no.1 : argument SRs : abs 2 pot 1 uni 2
Number : si

secondary Syntactic cats : ad

selection Syntactic cats : no ad
Meaning no.1: predicate agent : bio 2 ani 2 hum 2 pot 1 uni 1 patient : bio 1 ani 1 hum 1 phy 1 abs 1 pla 1 pot 1 uni 1 pre 1 Preps : of instrument : bio 1 ani 1 hum 1 phy 1 abs 1 pla 1 pot 1 uni 1 pre 1
Number : si

sensing Syntactic cats : no
Meaning no.1: predicate experiencer : bio 2 ani 2 hum 2 pot 2 uni 1 Preps : by patient : phy 2 pla 1 pot 1 uni 1 Preps : of instrument : phy 2 pot 1 uni 1 Preps : by with Number : si

serials Syntactic cats : no ad
Meaning no.1 : argument SRs : abs 2 Number : pl

shape Syntactic cats : no
Meaning no.1 : argument SRs : phy 2 Number : si

shuttles Syntactic cats : no
Meaning no.1 : argument SRs : phy 2 pot 1
Number : pl

simulation Syntactic cats : no
Meaning no.1: predicate agent : bio 2 ani 2 hum 2 pot 2 uni 1 patient : bio 1 ani 1 hum 1 phy 1 abs 1 pla 1 pot 1 uni 1 pre 1 Preps : of instrument : phy 1 abs 1 pot 1 uni 1 pre 1 Number : si

singularities Syntactic cats : no
Meaning no.1 : argument SRs : phy 2 Number : pl

size Syntactic cats : no
Meaning no.1 : argument SRs : phy 2 Number : si

Skylab Syntactic cats : nn
Meaning no.1 : argument SRs : phy 2 pot 2 uni 2
Number : si

Small Magellanic Cloud Syntactic cats : np
Meaning no.1 : argument SRs : phy 2 pla 2 uni 2
Number : si

Smith, Ralph A Syntactic cats : nn
Meaning no.1 : argument SRs : bio 2 ani 2 hum 2 pot
2 uni 2 Number : si

solar Syntactic cats : ad

sources Syntactic cats : no
Meaning no.1 : argument SRs : phy 2 pla 1 pot 1
Number : pl

South Africa Syntactic cats : np
Meaning no.1 : argument SRs : pla 2 uni 2
Number : si

southern Syntactic cats : ad

Soviet Syntactic cats : ad

Soviet Union Syntactic cats : np
Meaning no.1 : argument SRs : pla 2 uni 2
Number : si

Soyuz 19 Syntactic cats : nn
Meaning no.1 : argument SRs : phy 2 pot 2 uni 2
Number : si

space Syntactic cats : no ad
Meaning no.1 : argument SRs : phy 2 pla 1 pot 1 uni
1 Number : si

Spacelab Programme Syntactic cats : nn
Meaning no.1 : argument SRs : abs 2 pot 2 uni 2
Number : si

spectra Syntactic cats : no
Meaning no.1 : argument SRs : phy 2 Number : pl

spectrometers Syntactic cats : no
Meaning no.1 : argument SRs : phy 2 Number : pl

spectrophotometric Syntactic cats : ad

spectroscopy Syntactic cats : no
Meaning no.1: predicate agent : bio 2 ani 2 hum 2 pot 2 uni 1 patient : phy 2 uni 1 Preps : of instrument : pre 2 Number : si

spherical Syntactic cats : ad

star Syntactic cats : no ad
Meaning no.1 : argument SRs : phy 2 pla 2 pot 1
Number : si

stars Syntactic cats : no
Meaning no.1 : argument SRs : phy 2 pla 2 pot 1
Number : pl

stock Syntactic cats : no
Meaning no.1 : argument SRs : phy 2 Number : si

Stonehenge Syntactic cats : np
Meaning no.1 : argument SRs : phy 2 pla 2 uni 2
Number : si

storms Syntactic cats : no
Meaning no.1 : argument SRs : phy 2 pot 2
Number : pl

structure Syntactic cats : no
Meaning no.1 : argument SRs : phy 1 abs 1
Number : si

studies Syntactic cats : no
Meaning no.1 : argument SRs : abs 2 Number : pl

study Syntactic cats : ad

subjects Syntactic cats : no
Meaning no.1 : argument SRs : abs 2 Number : pl

Sumerian Syntactic cats : ad

sun Syntactic cats : no
Meaning no.1 : argument SRs : phy 2 pla 2 pot 2 uni 2 Number : si

sunspots Syntactic cats : no
Meaning no.1 : argument SRs : phy 2 pot 2
Number : pl

supernovae Syntactic cats : no
Meaning no.1 : argument SRs : phy 2 pla 2
Number : pl

surface Syntactic cats : ad no
Meaning no.1 : argument SRs : phy 2 Number : si

surveying Syntactic cats : no
Meaning no.1: predicate agent : bio 2 ani 2 hum 2 pot 2 uni 1 Preps : n patient : pla 2 uni 1 Preps : of instrument : pre 2 Number : si

system Syntactic cats : no ad
Meaning no.1 : argument SRs : bio 1 ani 1 hum 1 phy 1 abs 1 pot 1 Number : si

systems Syntactic cats : no
Meaning no.1 : argument SRs : phy 1 abs 1 pot 1
Number : pl

tables Syntactic cats : no
Meaning no.1 : argument SRs : phy 2
Meaning no.2 : argument SRs : abs 2 Number : pl

taken Syntactic cats : ve
Meaning no.1: predicate agent : bio 2 ani 2 hum 2 pot 2 uni 1 Preps : by patient : bio 1 ani 1 hum 1 phy 1 pot 1 uni 1 instrument : phy 2 uni 1 Preps : with from loc. : phy 1 pla 1 pot 1 uni 1 Preps : from

tangential Syntactic cats : ad

teaching Syntactic cats : no
Meaning no.1: predicate agent : bio 2 ani 2 hum 2 pot 2 uni 1 Preps : by beneficiary : bio 2 ani 2 hum 1 pot 2 uni 1 Preps : of instrument : phy 1 abs 1 pot 1 uni 1 pre 1 Preps : with by
Number : si

technical Syntactic cats : ad

techniques Syntactic cats : no
Meaning no.1 : argument SRs : abs 2 pot 1
Number : pl

tektites Syntactic cats : no
Meaning no.1 : argument SRs : phy 2 Number : pl

telescopes Syntactic cats : no
Meaning no.1 : argument SRs : phy 2 pot 2
Number : pl

temperature Syntactic cats : no
Meaning no.1 : argument SRs : abs 2 Number : si

terrestrial Syntactic cats : ad

testing Syntactic cats : no
Meaning no.1: predicate agent : bio 2 ani 2 hum 2 pot 2 uni 1 Preps : by patient : bio 1 ani 1 hum 1 phy 1 abs 1 pot 1 uni 1 pre 1 Preps : of instrument : pre 2 Number : si

texts Syntactic cats : no
Meaning no.1 : argument SRs : abs 2 Number : pl

the Syntactic cats : de

theoretical Syntactic cats : ad

theories Syntactic cats : no
Meaning no.1: predicate agent : bio 2 ani 2 hum 2 pot 2 uni 1 Preps : of patient : bio 1 ani 1 hum 1 phy 1 abs 1 pla 1 pot 1 uni 1 pre 1 Preps : of factitive : blocked Number : pl

theory Syntactic cats : no
Meaning no.1 : argument SRs : abs 2 Number : si
si

Theory of the moon's motion Syntactic cats : nn
Meaning no.1 : argument SRs : abs 2 uni 2
Number : si

thermal Syntactic cats : ad

time Syntactic cats : no ad
Meaning no.1 : argument SRs : abs 2 Number : si

to Syntactic cats : pr

trajectories Syntactic cats : no
Meaning no.1 : argument SRs : abs 2 Number : pl

transfer Syntactic cats : no
Meaning no.1: predicate agent : bio 2 ani 2 hum 2 pot 2 uni 1 beneficiary : phy 2 pot 1 uni 1
Preps : to instrument : phy 2 pot 1 uni 1
Number : si

turbulence Syntactic cats : no
Meaning no.1 : argument SRs : phy 1 pot 1
Meaning no.2: predicate agent : phy 1 pla 1 pot 1 uni 1 Number : si

ultraviolet Syntactic cats : ad

United States Syntactic cats : np
Meaning no.1 : argument SRs : pla 2 uni 2
Number : si

universe Syntactic cats : no
Meaning no.1 : argument SRs : phy 2 pla 2 uni 2
Number : si

universities Syntactic cats : no
Meaning no.1 : argument SRs : pla 2 pot 1
Number : pl

University of Cambridge. Institute of Astronomy
Syntactic cats : nn
Meaning no.1 : argument SRs : pla 2 Number : si

unmanned Syntactic cats : ad

Ursa Major Syntactic cats : np
Meaning no.1 : argument SRs : phy 2 pla 2 uni 2
Number : si

use Syntactic cats : no
Meaning no.1: predicate agent : bio 2 ani 2 hum 2 pot 2 uni 1 patient : bio 1 ani 1 hum 1 phy 1 abs 1 pla 1 pot 1 uni 1 pre 1 Preps : of beneficiary : ani 1 pre 1 Preps : in Number : si

variable Syntactic cats : ad

variation Syntactic cats : no
Meaning no.1: predicate experiencer : bio 1 ani 1 hum 1 phy 1 pot 1 pre 1 Number : si

vehicles Syntactic cats : no
Meaning no.1 : argument SRs : phy 2 pot 2
Number : pl

Vela X Syntactic cats : np
Meaning no.1 : argument SRs : phy 2 pla 2 uni 2
Number : si

Velikovsky, Immanuel Syntactic cats : nn
Meaning no.1 : argument SRs : bio 2 ani 2 hum 2 pot 2 uni 2 Number : si

velocity Syntactic cats : no
Meaning no.1 : argument SRs : abs 2 Number : si

Venus Syntactic cats : np
Meaning no.1 : argument SRs : phy 2 pla 2 pot 2 uni 2 Number : si

vidicons Syntactic cats : no
Meaning no.1 : argument SRs : phy 2 pot 2
Number : pl

viewpoints Syntactic cats : no
Meaning no.1 : argument SRs : abs 2 Number : pl

Viking Mars Program Syntactic cats : nn
Meaning no.1 : argument SRs : abs 2 pot 1 uni 2
Number : si

Vikings 1 & 2 Syntactic cats : nn
Meaning no.1 : argument SRs : phy 2 pot 2 uni 2
Number : pl

visible Syntactic cats : ve
Meaning no.1: predicate experiencer : bio 2 ani 2
hum 1 pot 1 uni 1 Preps : by patient : bio 1
ani 1 hum 1 phy 1 pla 1 pot 1 uni 1 from loc. : phy
1 pla 1 pot 1 uni 1 Preps : from

visitors' Syntactic cats : ad

Voyager 1 Syntactic cats : nn
Meaning no.1 : argument SRs : phy 2 pot 2 uni 2
Number : si

Voyager 2 Syntactic cats : nn
Meaning no.1 : argument SRs : phy 2 pot 2 uni 2
Number : si

Welsh Syntactic cats : ad no
Meaning no.1 : argument SRs : bio 2 ani 2 hum 2 pot
2 Number : si

white Syntactic cats : ad

Wiltshire Syntactic cats : np
Meaning no.1 : argument SRs : pla 2 uni 2
Number : si

with Syntactic cats : pr

works Syntactic cats : no ad
Meaning no.1 : argument SRs : abs 2 Number : pl

world Syntactic cats : no ad
Meaning no.1 : argument SRs : pla 2 Number : si

x-ray Syntactic cats : ad
End of data

APPENDIX D

ENGLISH-FRENCH TRANSFER DICTIONARY

& (co) BL-PT Project lexicon Equivalent :
& (co) BL-PT Project lexicon Notes : 28 OCT

* (co) Equivalent : , (co) Notes : 28 OCT

200-inch hale telescope (nn) Equivalent :
télescope hale de 508 cm (nn) Notes : 30 AUG

active (ad) Equivalent : actif (ad)
Notes : 17 FEB

aerodynamics (no) PRECIS physics thesaurus
Equivalent : aérodynamique (no) Notes :
Harrap 01 OCT

aerospace (ad) Equivalent : aérospatial
(ad) Notes : 25 OCT

aldrin, edwin eugene (nn) Equivalent :
aldrin, edwin eugene (nn) Notes : 22 OCT

algol (np) Equivalent : algol (np)
Notes : 25 OCT

amateur (ad) astronomy (no) Equivalent :
astronomie d'amateur (no) Notes : 25 JAN

amateurs (no) Equivalent : amateurs (no)
Notes : 26 JAN

amateurs' (ad) manuals (no) Equivalent :
manuels (no) pour (pr) amateurs (no) Notes :
25 JAN

america (np) Equivalent : amérique (np)
Notes : Harrap 01 OCT

american (ad) Equivalent : américain
(ad) Notes : Harrap 01 OCT

amesbury (np) Equivalent : amesbury (np)
Notes : 22 JAN

analysis (no) Equivalent : analyse (no)
Notes : 22 JAN

ancient (ad) Equivalent : ancien (ad)
Notes : 01 OCT

ancient (ad) world (no) Equivalent : monde
(no) antique (ad) Notes : 01 OCT

answers (no) Equivalent : solutions (no)
Notes : Cassell 22 JAN

anthroposophical (ad) Equivalent :
anthroposophique (ad) Notes : Encyc.
Universalis 28 OCT

apollo 11 (nn) Equivalent : apollo-11
(nn) Notes : 25 OCT

apollo 12 (nn) Equivalent : apollo-12
(nn) Notes : 25 OCT

apollo 13 (nn) Equivalent : apollo-13
(nn) Notes : 25 OCT

apollo 14 (nn) Equivalent : apollo-14
(nn) Notes : 25 OCT

apollo 15 (nn) Equivalent : apollo-15
(nn) Notes : 25 OCT

apollo 16 (nn) Equivalent : apollo-16
(nn) Notes : 25 OCT

apollo 17 (nn) Equivalent : apollo-17
(nn) Notes : 25 OCT

apollo project (nn) Equivalent : projet
apollo (nn) Notes : 25 OCT

apollo (nn) Equivalent : apollo (nn)
Notes : 25 OCT

apollo-soyuz test project (nn) Equivalent :
projet apollo-soyouz (nn) Notes : 17 FEB

applications (no) Equivalent : applications
(no) Notes : Harrap 05 OCT

artificial (ad) Equivalent : artificiel
(ad) Notes : 01 OCT

as (pr) BL-PT Project lexicon Equivalent :
comme (pr) BL-PT Project lexicon Notes :
BL-PT Report, p64 25 OCT

aspects (no) Equivalent : aspects (no)
Notes : Cassell 01 OCT

astrolabes (no) Equivalent : astrolabes
(no) Notes : 05 OCT

astrology (no) Equivalent : astrologie
(no) Notes : Cassell 05 OCT

astronautics (no) Equivalent :
astronautique (no) Notes : 05 OCT

astronauts (no) Equivalent : astronautes
(no) Notes : 01 OCT

astronomers (no) Equivalent : astronomes
(no) Notes : 25 JAN

astronomical (ad) Equivalent : astronomique
(ad) Notes : 01 OCT

astronomy (no) Equivalent : astronomie
(no) Notes : 05 OCT

astrophysical (ad) Equivalent :
astrophysique (ad) Notes : 01 OCT

astrophysics (ad) Equivalent :
astrophysique (ad) Notes : 17 FEB

astrophysics (no) PRECIS physics thesaurus
Equivalent : astrophysique (no) Notes : 01 OCT

at (pr) Equivalent : prep(à) (pr)
Notes : 22 JAN

atlases (no) PRECIS categories of forms
Equivalent : atlas (no) Notes : 06 OCT

atmosphere (no) Equivalent : atmosphère
(no) Notes : 05 OCT

atmospheres (no) Equivalent : atmosphères
(no) Notes : 05 OCT

automatic (ad) Equivalent : automatique
(ad) Notes : 01 OCT

between (pr) BL-PT Project lexicon
Equivalent : entre (pr) BL-PT Project lexicon
Notes : BL-PT Report, p64 25 OCT

binary (ad) Equivalent : binaire (ad)
Notes : Thewlis 01 OCT

biographies (no) PRECIS categories of forms
Equivalent : biographies (no) Notes : Elsevier
01 OCT

black (ad) holes (no) Equivalent : cachots (no) Notes : Harrap 01 OCT

bodies (no) Equivalent : corps (no) Notes : 01 OCT

boundaries (no) Equivalent : limites (no) Notes : 28 OCT

british museum (natural history) (nn) Equivalent : british museum (natural history) (nn) Notes : 25 JAN

british (ad) Equivalent : britannique (ad) Notes : 17 FEB

by (pr) Equivalent : prep(par) (pr) Notes : 24 OCT

calculation (no) Equivalent : calcul (no) Notes : 05 OCT

calculations (no) Equivalent : calculs (no) Notes : 05 OCT

california (np) Equivalent : californie (np) Notes : Harrap 01 OCT

cambridge (np) Equivalent : cambridge (np) Notes : 21 JAN

cambridgeshire (np) Equivalent : cambridgeshire (np) Notes : 22 OCT

capsules (no) Equivalent : capsules (no) Notes : 17 FEB

career (ad) guides (no) Equivalent : guides des carrières (no) Notes : 25 JAN

catalogues (no) PRECIS categories of forms Equivalent : catalogues (no) Notes : Elsevier 01 OCT

celestial (ad) Equivalent : céleste (ad) Notes : 30 AUG

charge (no) Equivalent : charge (no) Notes : 05 OCT

charts (no) PRECIS categories of forms Equivalent : cartes (no) Notes : Cassell - no exact equiv. 01 OCT

chemical (ad) Equivalent : chimique (ad)
Notes : 28 OCT

china (np) Names of states Equivalent :
chine (np) Names of states Notes : 01 OCT

chromosphere (no) Equivalent :
chromosphère (no) Notes : 05 OCT

civilizations (no) Equivalent :
civilisations (no) Notes : Cassell 01 OCT

close-range (ad) Equivalent : à (pr)
court (ab) distance (no) Notes : 17 FEB

close-range (ad) gravitational (ad) interactions
(no) Equivalent : interactions (no)
gravitationnel (ad) à (pr) court (ab) distance (no)
Notes : 05 JUN

clouds (no) Equivalent : nuages (no)
Notes : 17 FEB

clusters (no) Equivalent : amas (no)
Notes : 24 OCT

collins, michael, b.1930 (nn) Equivalent :
collins, michael, b.1930 (nn) Notes : 22 OCT

comets (no) Equivalent : comètes (no)
Notes : 05 OCT

compared (ve) Equivalent : comparé (ve)
Notes : Rouen 17 FEB

composition (no) Equivalent : composition
(no) Notes : 05 OCT

computer (ad) systems (no) BL-PT Project
lexicon Equivalent : ordinateurs (no)
BL-PT Project lexicon Notes : 21 OCT

conference (ad) proceedings (no) Equivalent :
comptes-rendus (no) Notes : PHW 21 OCT

constellations (no) Equivalent :
constellations (no) Notes : 05 OCT

constituents (no) Equivalent : constituants
(no) Notes : 28 OCT

control (ad) systems (no) Equivalent :
systèmes de commande (no) Notes : Thewlis 21 OCT

control (no) Equivalent : contrôle (no)
Notes : 05 OCT

cool (ad) stars (no) Equivalent : étoiles (no) froid (ad) Notes : 22 OCT

copernicus, nicolaus (nn) Equivalent : copernic, nicolas (nn) Notes : Grand Larousse 25 OCT

core (no) Equivalent : noyau (no)
Notes : 17 FEB

cosmic (ad) Equivalent : cosmique (ad)
Notes : 21 OCT

cosmogony (no) Equivalent : cosmogonie (no) Notes : 05 OCT

cosmography (no) Equivalent : cosmographie (no) Notes : Harrap 05 OCT

cosmology (no) Equivalent : cosmologie (no) Notes : 05 OCT

cosmos facility (nn) Equivalent : cosmos facility (nn) Notes : 17 FEB

crab nebula (np) Equivalent : crab nebula (np) Notes : xx Ne/buleuse du Crabe 05 OCT

critical (ad) Equivalent : critique (ad)
Notes : 17 FEB

criticism (no) Equivalent : critique (no)
Notes : 05 OCT

cultural (ad) Equivalent : culturel (ad)
Notes : 17 FEB

curriculum (ad) subjects (no) Equivalent : matières d'enseignement (no) Notes : 30 AUG

data (no) Equivalent : données (no)
Notes : 01 OCT

density (no) PRECIS physics thesaurus
Equivalent : densité (no) Notes : 01 OCT

descriptive (ad) Equivalent : descriptif (ad) Notes : Harrap 01 OCT

determination (no) Equivalent :
détermination (no) Notes : Harrap 05 OCT

development (no) Equivalent :
développement (no) Notes : 22 JAN

dials (no) Equivalent : cadrans (no)
Notes : 17 FEB

digital (ad) BL-PT Project lexicon
Equivalent : digital (ad) BL-PT Project
lexicon Notes : 21 OCT

dimensions (no) Equivalent : dimensions
(no) Notes : 22 JAN

disasters (no) Equivalent : désastres
(no) Notes : Harrap 21 OCT

discovery (no) Equivalent : découverte
(no) Notes : Harrap 05 OCT

distribution (no) Equivalent : distribution
(no) Notes : 24 OCT

disturbance (no) Equivalent : perturbation
(no) Notes : Harrap 28 OCT

disturbances (no) Equivalent :
perturbations (no) Notes : 22 JAN

during (pr) BL-PT Project lexicon
Equivalent : pendant (pr) BL-PT Project
lexicon Notes : BL-PT Report, p64 25 OCT

dusts (no) Equivalent : poussières (no)
Notes : 22 OCT

dwarfs (no) Equivalent : naines (no)
Notes : 24 OCT

dynamics (no) PRECIS physics thesaurus
Equivalent : dynamique (no) Notes : 01 OCT

dynamo (ad) Equivalent : dynamo (ad)
Notes : 21 OCT

dynamo (no) Equivalent : dynamo (no)
Notes : 01 OCT

dyson, freeman john (nn) Equivalent :
dyson, freeman john (nn) Notes : 22 OCT

early (ad) works (no) Equivalent : premier (ab) oeuvres (no) Notes : 25 JAN

earth (np) Equivalent : terre (np) Notes : 05 OCT

earth's (ad) core (no) Equivalent : nife (no) Notes : 17 FEB

east sussex (np) Equivalent : east sussex (np) Notes : 26 OCT

eclipses (no) Equivalent : éclipses (no) Notes : 05 OCT

eclipsing (ad) binary (ad) stars (no) Equivalent : étoiles binaires s'éclipsant (no) Notes : Thewlis 06 OCT

economic (ad) Equivalent : économique (ad) Notes : Harrap 28 OCT

edinburgh (np) Equivalent : édimbourg (np) Notes : Harrap 01 OCT

effects (no) BL-PT Project lexicon Equivalent : effets (no) BL-PT Project lexicon Notes : 05 OCT

elasticity (no) PRECIS physics thesaurus Equivalent : élasticité (no) Notes : 01 OCT

electric (ad) Equivalent : électrique (ad) Notes : 28 OCT

electromagnetic (ad) Equivalent : électromagnétique (ad) Notes : 01 OCT

electrons (no) Equivalent : électrons (no) Notes : 05 OCT

encyclopaedias (no) PRECIS categories of forms Equivalent : encyclopédies (no) Notes : 01 OCT

energy (no) PRECIS physics thesaurus Equivalent : énergie (no) Notes : 01 OCT

ephemeris (ad) time (no) Equivalent : temps des éphémérides (no) Notes : ESA 17 FEB

equator (no) Equivalent : équateur (no) Notes : 28 OCT

equinoctial (ad) Equivalent : équinoxial (ad) Notes : 17 FEB

equipment (no) Equivalent : équipment (no) Notes : 24 OCT

europe (np) Equivalent : europe (np) Notes : Harrap 01 OCT

european space agency (nn) Equivalent : agence spatiale européenne (nn) Notes : 26 JAN

evolution (no) Equivalent : évolution (no) Notes : 05 OCT

exploration (no) Equivalent : exploration (no) Notes : 05 OCT

extragalactic (ad) Equivalent : extragalactique (ad) Notes : 01 OCT

facsimiles (no) PRECIS categories of forms Equivalent : facsimilés (no) Notes : Elsevier 01 OCT

far (ad) eastern (ad) astronomers (no) Equivalent : astronomes d'extrême-orient (no) Notes : 17 FEB

far (ad) infrared (ad) astronomy (no) Equivalent : astronomie de l'infrarouge (no) lontain (ad) Notes : 17 FEB

feasibility (ad) studies (no) Equivalent : études de faisabilité (no) Notes : 28 OCT

festschriften (no) PRECIS categories of forms Equivalent : livre d'or (no) Notes : Elsevier 01 OCT

fields (no) Equivalent : champs (no) Notes : 21 OCT

flare (ad) stars (no) Equivalent : étoiles variables à flare (no) Notes : 25 OCT

flight (no) Equivalent : vol (no) Notes : 24 OCT

for (pr) Equivalent : prep(pour) (pr) Notes : 24 OCT

for (pr) celestial (ad) navigation (no)
Equivalent : pour (pr) navigation (no) céleste (ad) Notes : 28 OCT

for (pr) children (no) Equivalent : pour (pr) enfants (no) Notes : 26 OCT

for (pr) geophysics (no) Equivalent : pour (pr) geophysique (no) Notes : 28 OCT

for (pr) land (ad) surveying (no) Equivalent : pour (pr) arpentage (no) Notes : 28 OCT

for (pr) primary (ad) school (ad) teaching (no)
Equivalent : pour (pr) enseignement (no) primaire (ad) Notes : 28 OCT

for (pr) primary (ad) schools (no) Equivalent : pour (pr) écoles (no) primaire (ad) Notes : 28 OCT

for (pr) schools (no) Equivalent : pour (pr) écoles (no) Notes : 26 OCT

for (pr) secondary (ad) school (ad) teaching (no)
Equivalent : pour (pr) enseignement (no) secondaire (ad) Notes : 28 OCT

for (pr) secondary (ad) schools (no)
Equivalent : pour (pr) écoles (no) secondaire (ad) Notes : 28 OCT

for (pr) spectrophotometric (ad) observations (no)
Equivalent : pour (pr) observations (no) spectrophotometrique (ad) Notes : 17 FEB

for (pr) teaching (no) Equivalent : pour (pr) enseignement (no) Notes : 25 JAN

forecasting (no) Equivalent : prévision (no) Notes : Harrap 05 OCT

forecasts (no) PRECIS categories of forms
Equivalent : prévisions (no) Notes : Cassell 01 OCT

formation (no) Equivalent : formation (no) Notes : 05 OCT

french (ad) texts (no) Equivalent : textes en français (no) Notes : 24 OCT

from (pr) Equivalent : prep(depuis) (pr)
Notes : 24 OCT

galactic (ad) Equivalent : galactique
(ad) Notes : 28 OCT

galaxies (no) Equivalent : galaxies (no)
Notes : 05 OCT

galaxy (np) Equivalent : galaxie (np)
Notes : 01 OCT

galilei, galileo (nn) Equivalent : galilei,
galileo (nn) Notes : Encyc. Universalis 25 OCT

gamma (ad) ray (ad) astronomy (no) Equivalent
: astronomie du rayonnement (no) gamma (ad)
Notes : 17 FEB

general theory of relativity (nn) Equivalent :
théorie de relativité générale (nn)
Notes : 21 OCT

geophysics (no) Equivalent : geophysique
(no) Notes : 28 OCT

giant (ad) Equivalent : géant (ad)
Notes : 01 O CT#

globular (ad) Equivalent : globulaire
(ad) Notes : 24 OCT

government (no) BL-PT Project lexicon
Equivalent : gouvernement (no) BL-PT Project
lexicon Notes : 05 OCT

gravitational (ad) Equivalent :
gravitationnel (ad) Notes : 17 FEB

great britain (np) Equivalent :
grande-bretagne (np) Notes : Harrap 01 OCT

great pyramid (nn) Equivalent : grande
pyramide (nn) Notes : 25 JAN

greenwich (london borough) (np) Equivalent :
greenwich (borough de londres) (np) Notes : 25
JAN

guides (no) Equivalent : guides (no)
Notes : 26 JAN

h-alpha (ad) Equivalent : alpha-h (ad)
Notes : 17 FEB

heat (ad) transfer (no) Equivalent :
échanges (no) thermique (ad) Notes : ESA 17 FEB

henge (ad) monuments (no) Equivalent :
cromlechs (no) Notes : 17 FEB

herschel, sir john, 1st bart (nn) Equivalent :
herschel, sir john, 1st bart (nn) Notes : 22 OCT

herstmonceaux (np) Equivalent :
herstmonceaux (np) Notes : 22 JAN

high (ad) energy (ad) astrophysics (no)
Equivalent : astrophysique (no) de (pr) grand (ab)
énergie (no) Notes : 17 FEB

high (ad) energy (ad) cosmic (ad) radiation (no)
Equivalent : rayonnement (no) cosmique (ad) de (pr)
grand (ab) énergie (no) Notes : 17 FEB

hoerbiger, hans (nn) Equivalent :
hoerbiger, hans (nn) Notes : 25 OCT

holes (no) Equivalent : trous (no)
Notes : 17 FEB

human (ad) Equivalent : humain (ad)
Notes : Harrap 28 OCT

identification (ad) manuals (no) Equivalent :
manuels (no) pour (pr) identification (no)
Notes : 25 JAN

identification (no) Equivalent :
identification (no) Notes : 05 OCT

illustrations (no) PRECIS categories of forms
Equivalent : illustrations (no) Notes :
Elsevier 01 OCT

images (no) Equivalent : images (no)
Notes : 05 OCT

implications (no) Equivalent : implications
(no) Notes : 24 OCT

in (pr) Equivalent : prep(dans) (pr)
Notes : 24 OCT

influence (no) BL-PT Project lexicon
Equivalent : influence (no) BL-PT Project lexicon Notes : 05 OCT

infrared (ad) astronomy (no) Equivalent : astronomie de l'infrarouge (no) Notes : 13 OCT

infrared (ad) spectroscopy (no) Equivalent : spectroscopie de l'infrarouge (no) Notes : Thewlis 26 OCT

instantaneous (ad) Equivalent : instantané (ad) Notes : 24 OCT

institutions (no) Equivalent : institutions (no) Notes : 17 FEB

instrumentation (no) Equivalent : instrumentation (no) Notes : 17 FEB

intensity (ad) interferometers (no) Equivalent : intérferomètres d'intensité (no) Notes : 26 OCT

interactions (no) Equivalent : interactions (no) Notes : 17 FEB

interiors (no) Equivalent : intérieurs (no) Notes : Harrap 21 OCT

interplanetary (ad) Equivalent : interplanétaire (ad) Notes : 01 OCT

interpretation (no) Equivalent : interprétation (no) Notes : 05 OCT

interstellar (ad) Equivalent : interstellaire (ad) Notes : 01 OCT

irish (ad) texts (no) Equivalent : textes en irlandais (no) Notes : 26 OCT

iron (ad) Equivalent : ferreux (ad)
Notes : 01 OCT

irwin, james benson (nn) Equivalent : irwin, james benson (nn) Notes : 22 OCT

islamic (ad) Equivalent : islamique (ad)
Notes : 17 FEB

japan (np) Names of states Equivalent : japon (np) Names of states Notes : 01 OCT

jupiter (np) Equivalent : jupiter (np)
Notes : 01 OCT

kensington and chelsea (london borough) (np)
Equivalent : kensington and chelsea (borough de londres) (np) Notes : 25 JAN

kepler's (ad) laws (no) Equivalent : lois de képler (no) Notes : 01 OCT

land (ad) surveying (no) Equivalent : arpentage (no) Notes : Harrap 28 OCT

land (no) Equivalent : terre (no)
Notes : Harrap 05 OCT

large magellanic cloud (np) Equivalent : grand nuage de magellan (np) Notes : 05 OCT

latin-english (ad) parallel (ad) texts (no)
Equivalent : textes (no) latin (ad) & (co) anglais (ad) en (pr) parallèle (no) Notes : 25 JAN

levitation (no) Equivalent : légèreté (no) Notes : 05 OCT

life (ad) cycle (no) Equivalent : cycle de vie (no) Notes : 17 FEB

light (ad) Equivalent : léger (ad)
Notes : Weight 01 OCT

light (no) PRECIS physics thesaurus
Equivalent : lumière (no) Notes : 01 OCT

link-up (no) Equivalent : jonction (no)
Notes : space 30 MAR

living (ad) conditions (no) Equivalent : conditions de vie (no) Notes : 06 OCT

london (np) Equivalent : londres (np)
Notes : Harrap 01 OCT

longitude 140 (no) Equivalent : longitude 140° (no) Notes : 30 AUG

machinery (no) Equivalent : machines (no)
Notes : 05 OCT

magnetic (ad) Equivalent : magnétique (ad) Notes : 21 OCT

magnitude (no) Equivalent : magnitude (no) Notes : 24 OCT

man (no) Equivalent : homme (no) Notes : Harrap 05 OCT

manned (ad) space (ad) flight (no) Equivalent : vol (no) spatial (ad) de (pr) véhicules (no) habité (ad) Notes : 24 OCT

manuals (no) PRECIS categories of forms Equivalent : manuels (no) Notes : Cassell 01 OCT

mariner 10 (nn) Equivalent : mariner-10 (nn) Notes : 25 OCT

mariner 6 (nn) Equivalent : mariner-6 (nn) Notes : 25 OCT

mariner 7 (nn) Equivalent : mariner-7 (nn) Notes : 25 OCT

mariner 9 (nn) Equivalent : mariner-9 (nn) Notes : 22 JAN

mariners 6 & 7 (nn) Equivalent : mariner-6 & 7 (nn) Notes : 25 JAN

mars (np) Equivalent : mars (np) Notes : 01 OCT

masers (no) Equivalent : masers (no) Notes : Harrap 01 OCT

mathematical (ad) Equivalent : mathématique (ad) Notes : 30 AUG

mathematics (no) Equivalent : mathématiques (no) Notes : 30 AUG

matter (no) PRECIS physics thesaurus Equivalent : matière (no) Notes : 01 OCT

measurement (no) Equivalent : mesure (no) Notes : 05 OCT

mechanics (no) Equivalent : mécanique (no) Notes : 01 O CT3

megalithic (ad) Equivalent : mégalithique (ad) Notes : 17 FEB

mercury (np) Equivalent : mercure (np)
Notes : 25 OCT

meteorites (no) Equivalent : météorites
(no) Notes : 05 OCT

meteors (no) Equivalent : météores
(no) Notes : 05 OCT

mexico (np) Names of states Equivalent :
mexique (np) Names of states Notes : 01 OCT

milky way (np) Equivalent : voie lactée
(np) Notes : 05 OCT

model (ad) rockets (no) Equivalent :
modèles de fusées (no) Notes : 24 OCT

models (no) Equivalent : modèles (no)
Notes : Harrap 24 OCT

molecular (ad) Equivalent : moléculaire
(ad) Notes : 17 FEB

molecules (no) PRECIS physics thesaurus
Equivalent : molécules (no) Notes : 06 OCT

monuments (no) Equivalent : monuments
(no) Notes : Cassell 05 OCT

moon (np) Equivalent : lune (np)
Notes : 05 OCT

motion (no) PRECIS physics thesaurus
Equivalent : mouvement (no) Notes :
Fr=mouvement gros 01 OCT

mount palomar (nn) Equivalent :
mont-palomar (nn) Notes : Larousse 05 OCT

museums (no) Equivalent : musées (no)
Notes : Harrap 05 OCT

naked (ad) eye (ad) astronomy (no) Equivalent
: astronomie à l'oeil (no) nu (ad) Notes : 17 FEB

navigation (no) Equivalent : navigation
(no) Notes : 28 OCT

near (ad) Equivalent : proche (ad)
Notes : 26 OCT

near (pr) Equivalent : près de (pr)
Notes : BL-PT Report, p64 25 OCT

nebular (ad) Equivalent : nebulaire (ad)
Notes : 25 OCT

nebulas (no) Equivalent : nébuleuses
(no) Notes : Harrap 05 OCT

neptune (np) Equivalent : neptune (np)
Notes : 01 OCT

netherlands (np) Names of states
Equivalent : pays-bas (np) Names of states
Notes : 01 OCT

neutron (ad) stars (no) Equivalent :
étoiles de neutrons (no) Notes : 06 OCT

newton, sir isaac (nn) Equivalent : newton,
sir isaac (nn) Notes : 25 OCT

noise (ad) storms (no) Equivalent : orages
de bruit (no) Notes : 21 OCT

northern (ad) hemisphere (no) Equivalent :
hémisphère (no) nord (ad) Notes : 26 OCT

novae (no) Equivalent : novae (no)
Notes : 05 OCT

nuclear (ad) Equivalent : nucléaire
(ad) Notes : 26 OCT

nuclei (no) Equivalent : noyaux (no)
Notes : 21 JAN

nutation (no) Equivalent : nutation (no)
Notes : 05 OCT

ob (ad) Equivalent : ob (ad) Notes : 25 OCT

observation (no) Equivalent : observation
(no) Notes : 05 OCT

observations (no) Equivalent : observations
(no) Notes : 06 OCT

observatories (no) Equivalent :
observatoires (no) Notes : 01 OCT

of (pr) Equivalent : prep(de) (pr)
Notes : 24 OCT

on (pr) Equivalent : prep(sur) (pr)
Notes : 21 JAN

oort, jan hendrik (nn) Equivalent : oort,
jan hendrik (nn) Notes : 21 JAN

optical (ad) Equivalent : optique (ad)
Notes : 25 JAN

optimisation (no) Equivalent : optimisation
(no) Notes : 01 OCT

orbit (no) Equivalent : orbite (no)
Notes : 05 OCT

orbits (no) Equivalent : orbites (no)
Notes : 01 OCT

organisation (no) Equivalent : organisation
(no) Notes : 01 OCT

organisations (no) Equivalent :
organisations (no) Notes : 01 OCT

origin (no) Equivalent : origine (no)
Notes : 05 OCT

origins (no) Equivalent : origines (no)
Notes : 05 OCT

outer (ad) space (no) Equivalent : espace
(no) intersidéral (ad) Notes : 01 OCT

paintings (no) Equivalent : peintures
(no) Notes : 17 FEB

parallel (ad) Equivalent : parallèle
(ad) Notes : 25 JAN

personal (ad) Equivalent : personnel (ad)
Notes : 17 FEB

photographs (no) BL-PT Project lexicon
Equivalent : photographies (no) BL-PT Project
lexicon Notes : 24 OCT

photometry (no) PRECIS physics thesaurus
Equivalent : photométrie (no) Notes : 01 OCT

photospheres (no) Equivalent :
photosphères (no) Notes : 05 OCT

photovisual (ad) Equivalent : photovisuel (ad) Notes : 24 OCT

physical (ad) Equivalent : physique (ad) Notes : 28 OCT

physics (ad) Equivalent : physique (ad) Notes : 28 OCT

physics (no) PRECIS physics thesaurus Equivalent : physique (no) Notes : 01 OCT

planetariums (no) Equivalent : planétariums (no) Notes : 05 OCT

planets (no) Equivalent : planètes (no) Notes : 05 OCT

planispheric (ad) Equivalent : planisphère (ad) Notes : Encyc 24 OCT

plasma (ad) Equivalent : plasmique (ad) Notes : 17 FEB

plasmas (no) PRECIS physics thesaurus Equivalent : plasmas (no) Notes : 01 OCT

pluto (np) Equivalent : pluton (np) Notes : 01 OCT

pocket (ad) electronic (ad) calculators (no) Equivalent : calculateurs électroniques de poche (no) Notes : 21 JAN

poems (no) PRECIS categories of forms Equivalent : poèmes (no) Notes : Elsevier 01 OCT

polarity (no) Equivalent : polarité (no) Notes : 05 OCT

policies (no) Equivalent : politique (no) Notes : 17 FEB

polish (ad) texts (no) Equivalent : textes en polandais (no) Notes : 26 OCT

pre-columbian (ad) Equivalent : precolombien (ad) Notes : 26 OCT

processes (no) Equivalent : processus (no) Notes : 17 FEB

procyon (np) Equivalent : procyon (np)
Notes : 05 OCT

programmed (ad) instructions (no) PRECIS categories of forms Equivalent : enseignement (no) programmé (ad) Notes : 30 MAR

project daedalus (nn) Equivalent : projet daedalus (nn) Notes : 17 FEB

projects (no) Equivalent : projets (no)
Notes : Cassell 01 OCT

proper (ad) Equivalent : propre (ad)
Notes : 01 OCT

properties (no) Equivalent : propriétés (no) Notes : 28 OCT

propulsion (ad) systems (no) Equivalent : systèmes de propulsion (no) Notes : Grand Larousse 28 OCT

propulsion (no) Equivalent : propulsion (no) Notes : 01 OCT

ptolemaeus, claudius (nn) Equivalent : ptolémée, claude (nn) Notes : Grand Larousse 25 OCT

pulsars (no) Equivalent : pulsars (no)
Notes : Harrap 05 OCT

pulsating (ad) Equivalent : pulsant (ad)
Notes : 01 OCT

quasi-stellar (ad) objects (no) Equivalent : quasars (no) Notes : 17 FEB

questions (no) Equivalent : questions (no) Notes : 24 OCT

radiation (no) PRECIS physics thesaurus Equivalent : rayonnement (no) Notes : Fr preferred to radiation 01 OCT

radio (ad) frequency (ad) Equivalent : radioélectrique (ad) Notes : 24 OCT

radio (ad) galaxies (no) Equivalent : radiogalaxies (no) Notes : Hachette 30 MAR

radioastronomy (no) Equivalent :
radioastronomie (no) Notes : 01 OCT

radiotelescopes (no) Equivalent :
radiotélescopes (no) Notes : 05 OCT

rays (no) Equivalent : rayons (no)
Notes : Harrap 21 OCT

readings (no) PRECIS categories of forms
Equivalent : lectures (no) Notes : Elsevier 01
OCT

recombination (ad) lines (no) Equivalent :
lignes de recombinaison (no) Notes : 17 FEB

redshifts (no) PRECIS physics thesaurus
Equivalent : décalage (no) vers (pr) le (de) rouge
(no) Notes : 01 OCT

refraction (no) PRECIS physics thesaurus
Equivalent : réfraction (no) Notes : 01 OCT

region (no) Equivalent : région (no)
Notes : 28 OCT

regions (no) BL-PT Project lexicon
Equivalent : régions (no) BL-PT Project
lexicon Notes : 22 OCT

related (ve) Equivalent : relaté (ve)
Notes : 17 FEB

relativistic (ad) Equivalent : relativiste
(ad) Notes : Harrap 01 OCT

remote (ad) sensing (no) Equivalent :
télédétection (no) Notes : 01 OCT

research (ad) organisations (no) Equivalent :
organisations de recherche (no) Notes : 26 OCT

research (ad) projects (no) Equivalent :
projets de recherche (no) Notes : 25 JAN

research (no) Equivalent : recherche (no)
Notes : 24 OCT

retrograde (ad) Equivalent : rétrograde
(ad) Notes : 01 OCT

reviews (no) of (pr) research (no) Equivalent
: revues de recherche (no) Notes : 25 JAN

rockets (no) Equivalent : fusées (no)
Notes : Harrap 28 OCT

role (no) BL-PT Project lexicon Equivalent
: rôle (no) BL-PT Project lexicon Notes
: 26 OCT

rotating (ad) stars (no) Equivalent :
étoiles en rotation (no) Notes : 06 OCT

rotation (no) PRECIS physics thesaurus
Equivalent : rotation (no) Notes : 01 OCT

round (pr) BL-PT Project lexicon
Equivalent : autour de (pr) BL-PT Project
lexicon Notes : BL-PT Report, p64 25 OCT

royal greenwich observatory (nn) Equivalent :
royal greenwich observatory (nn) Notes : 17 FEB

royal observatory, edinburgh (nn) Equivalent :
royal observatory, edimbourgh (nn) Notes : 17 FEB

royal observatory, edinburgh. u.k. infrared
telescope unit (nn) Equivalent : royal
observatory, edimbourgh. u.k. infrared telescope unit
(nn) Notes : 17 FEB

russian (ad) Equivalent : russe (ad)
Notes : 28 OCT

satellites (no) Equivalent : satellites
(no) Notes : 05 OCT

saturn (np) Equivalent : saturne (np)
Notes : 05 OCT

schools (no) Equivalent : écoles (no)
Notes : 25 JAN

science research council (great britain). solar
system committee (nn) Equivalent : science
research council (grande-bretagne). solar system
committee (nn) Notes : 17 FEB

secondary (ad) Equivalent : secondaire
(ad) Notes : 25 JAN

selection (no) Equivalent : choix (no)
Notes : 01 OCT

serials (no) PRECIS categories of forms

* * * continued * * *

* * * continuation * * *
Equivalent : périodiques (no) Notes :
Elsevier 01 OCT

shape (no) Equivalent : forme (no)
Notes : 28 OCT

shuttles (no) Equivalent : navettes (no)
Notes : Harrap 01 OCT

simulation (no) Equivalent : simulation
(no) Notes : 01 OCT

singularities (no) Equivalent :
singularités (no) Notes : 21 OCT

size (no) Equivalent : dimensions (no)
Notes : 25 JAN

skylab (nn) Equivalent : skylab (nn)
Notes : Hachette 25 OCT

small magellanic cloud (np) Equivalent :
petit nuage de magellan (np) Notes : 05 OCT

smith, ralph a (nn) Equivalent : smith,
ralph a (nn) Notes : 30 MAR

solar (ad) Equivalent : solaire (ad)
Notes : 01 OCT

sources (no) Equivalent : sources (no)
Notes : 17 FEB

south africa (np) Names of states
Equivalent : afrique-du-sud (np) Names of
states Notes : 01 OCT

southern (ad) hemisphere (no) Equivalent :
hémisphère (no) sud (ad) Notes : 26 OCT

soviet union (np) BL-PT Project lexicon
Equivalent : urss (np) BL-PT Project lexicon
Notes : Names of states: Eng=USSR 01 OCT

soviet (ad) Equivalent : soviétique
(ad) Notes : 30 AUG

soyuz 19 (nn) Equivalent : soyouz-19 (nn)
Notes : 25 OCT

space (ad) Equivalent : spatial (ad)
Notes : 24 OCT

space (ad) research (ad) projects (no)
Equivalent : projets de recherches (no) spatial
(ad) Notes : 25 JAN

space (no) Equivalent : espace (no)
Notes : 01 OCT

spacelab programme (nn) Equivalent :
programme spacelab (nn) Notes : 25 JAN

spectra (no) PRECIS physics thesaurus
Equivalent : spectres (no) Notes : 01 OCT

spectrometers (no) Equivalent :
spectromètres (no) Notes : Thewlis 22 OCT

spectrophotometric (ad) Equivalent :
spectrophotometrique (ad) Notes : 17 FEB

spectroscopy (no) Equivalent :
spectroscopie (no) Notes : 01 OCT

spherical (ad) Equivalent : sphérique
(ad) Notes : 01 OCT

star (ad) clusters (no) Equivalent : amas
d'étoiles (no) Notes : 24 OCT

stars (no) Equivalent : étoiles (no)
Notes : 05 OCT

stock (no) Equivalent : stock (no)
Notes : 17 FEB

stonehenge (np) Equivalent : stonehenge
(np) Notes : 25 JAN

structure (no) Equivalent : structure
(no) Notes : Elsevier 05 OCT

studies (no) Equivalent : études (no)
Notes : 17 FEB

study (ad) BL-PT Project lexicon
Equivalent : étudié (ad) BL-PT Project
lexicon Notes : 22 OCT

study (ad) examples (no) Equivalent :
sujets (no) étudié (ad) Notes : 22 OCT

sumerian (ad) Equivalent : sumérien
(ad) Notes : 25 JAN

sun (no) BL-PT Project lexicon Equivalent : soleil (no) BL-PT Project lexicon Notes : 05 OCT

sunspots (no) Equivalent : taches (no) solaire (ad) Notes : 05 OCT

supernovae (no) Equivalent : supernovae (no) Notes : 05 OCT

surface (ad) features (no) BL-PT Project lexicon Equivalent : surface (no) BL-PT Project lexicon Notes : 01 OCT

surveying (no) Equivalent : arpentage (no) Notes : 25 JAN

system (no) Equivalent : système (no) Notes : 01 OCT

tables (no) PRECIS categories of forms Equivalent : tables (no) Notes : 01 OCT

taken (ve) Equivalent : pris (ve) Notes : 13 OCT

tangential (ad) Equivalent : tangentiel (ad) Notes : 06 OCT

teaching (no) Equivalent : enseignement (no) Notes : 01 OCT

technical (ad) Equivalent : technique (ad) Notes : 28 OCT

techniques (no) Equivalent : techniques (no) Notes : 22 JAN

tektites (no) Equivalent : tectites (no) Notes : 05 OCT

telescopes (no) Equivalent : télescopes (no) Notes : 06 OCT

temperature (no) PRECIS physics thesaurus Equivalent : température (no) Notes : 01 OCT

terrestrial (ad) Equivalent : terrestre (ad) Notes : 24 OCT

testing (no) Equivalent : essai (no) Notes : 25 JAN

texts (no) Equivalent : textes (no)
Notes : 25 JAN

the (de) Equivalent : le (de) Notes : 21 JAN

theoretical (ad) Equivalent : théorique
(ad) Notes : 01 OCT

theories (no) Equivalent : théories
(no) Notes : 01 OCT

theory of the moon's motion (nn) Equivalent :
theory of the moon's motion (nn) Notes : 17 FEB

theory (no) Equivalent : théorie (no)
Notes : 01 OCT

thermal (ad) Equivalent : thermique (ad)
Notes : 28 OCT

time (ad) capsules (no) Equivalent :
capsules (no) témoin (ad) Notes : 17 FEB

to (pr) Equivalent : prep(à) (pr)
Notes : 21 JAN

trajectories (no) PRECIS physics thesaurus
Equivalent : trajectoires (no) Notes : Thewlis
01 OCT

turbulence (no) PRECIS physics thesaurus
Equivalent : turbulence (no) Notes : 01 OCT

ultraviolet (ad) Equivalent : ultraviolet
(ad) Notes : 01 OCT

united states (np) Names of states
Equivalent : états-unis (np) Names of states
Notes : 01 OCT

universe (no) Equivalent : univers (no)
Notes : 05 OCT

universities (no) Equivalent :
universitiés (no) Notes : Harrap 05 OCT

university of cambridge. institute of astronomy
(nn) Equivalent : university of cambridge.
institute of astronomy (nn) Notes : 17 FEB

unmanned (ad) space (ad) flight (no)
Equivalent : vol (no) spatial (ad) de (pr)
véhicules (no) automatique (ad) Notes : 24 OCT

up to (pr) BL-PT Project lexicon
Equivalent : jusqu'à (pr) BL-PT Project lexicon Notes : BL-PT Report, p64 25 OCT

ursa major (np) Equivalent : grande ourse (np) Notes : 05 OCT

use (no) BL-PT Project lexicon Equivalent : utilisation (no) BL-PT Project lexicon
Notes : 06 OCT

variable (ad) Equivalent : variable (ad)
Notes : 01 OCT

variation (no) Equivalent : variation (no) Notes : 01 OCT

vehicles (no) Equivalent : véhicules (no) Notes : 24 OCT

vela x (np) Equivalent : voile x (np)
Notes : 25 OCT

velikovsky, immanuel (nn) Equivalent : velikovsky, immanuel (nn) Notes : 25 OCT

velocity (no) Equivalent : vélocité (no) Notes : Harrap. Fr. commonly vitesse 01 OCT

venus (np) Equivalent : vénus (np)
Notes : 05 OCT

vidicons (no) Equivalent : vidicons (no)
Notes : Dict. de l'a-v. 22 OCT

viewpoints (no) Equivalent : points de vue (no) Notes : 25 JAN

viking mars program (nn) Equivalent : programme viking (nn) Notes : 17 FEB

vikings 1 & 2 (nn) Equivalent : viking-1 & 2 (nn) Notes : 25 JAN

visible (ve) Equivalent : visible (ve)
Notes : 17 FEB

visitors (no) Equivalent : visiteurs (no)
Notes : 17 FEB

visitors' (ad) guides (no) Equivalent : guides (no) pour (pr) visiteurs (no) Notes : 30 MAR

voyager 1 (nn) Equivalent : voyager-1 (nn) Notes : 26 OCT

voyager 2 (nn) Equivalent : voyager-2 (nn) Notes : 26 OCT

welsh (ad) texts (no) Equivalent : textes en gallois (no) Notes : 24 OCT

white (ad) Equivalent : blanc (ad) Notes : 24 OCT

wiltshire (np) Equivalent : wiltshire (np) Notes : 25 JAN

with (pr) Equivalent : prep(avec) (pr) Notes : 25 JAN

works (no) Equivalent : oeuvres (no) Notes : 25 JAN

x-ray (ad) astronomy (no) Equivalent : astronomie du rayonnement x (no) Notes : ESA 17 FEB

End of data

APPENDIX E

FRENCH ANALYSIS/SYNTHESIS DICTIONARY

& Syntactic cats : co Number : si Gender : mas Non-lead

, Syntactic cats : co No. & gender : invariable Non-lead

à Syntactic cats : pr Number : si Gender : mas Vowel start Non-lead

à partir de Syntactic cats : pr Number : si Gender : mas Vowel start Non-lead

actif Syntactic cats : ad Number : si Gender : mas Vowel start Lead

aérodynamique Syntactic cats : ad no Number : si Gender : mas Vowel start Lead
Meaning no.1: predicate agent : phy 2 pot 1 uni 1 Number : si Gender : fem Vowel start Lead

aérospatial Syntactic cats : ad Number : si Gender : mas Vowel start Lead

Afrique-du-sud Syntactic cats : np
Meaning no.1 : argument SRs : pla 2 uni 2 Number : si Gender : fem Vowel start Lead

Agence spatiale européenne Syntactic cats : nn
Meaning no.1 : argument SRs : abs 2 pot 1 uni 2 Number : si Gender : fem Vowel start Lead

Aldrin, Edwin Eugene Syntactic cats : nn
Meaning no.1 : argument SRs : bio 2 ani 2 hum 2 pot 2 uni 2 Number : si Gender : mas Vowel start Lead

Algol Syntactic cats : np
Meaning no.1 : argument SRs : phy 2 pla 2 uni 2 No. & gender : invariable Vowel start Lead

alpha-h Syntactic cats : ad No. & gender : invariable Vowel start Lead

amas Syntactic cats : no
Meaning no.1 : argument SRs : phy 2 Number : pl Gender : mas Vowel start Lead

amas d'étoiles Syntactic cats : no
Meaning no.1 : argument SRs : phy 2 Number : si Gender : mas Vowel start Lead

amateurs Syntactic cats : no

* * * continued * * *

* * * continuation * * *
Meaning no.1 : argument SRs : bio 2 ani 2 hum 2 pot 2
Number : pl Gender : mas Vowel start Lead

américain Syntactic cats : ad Number : si
Gender : mas Vowel start Lead

Amérique Syntactic cats : np
Meaning no.1 : argument SRs : pla 2 uni 2 Number :
si Gender : fem Vowel start Lead

Amesbury Syntactic cats : np
Meaning no.1 : argument SRs : pla 2 uni 2 No. &
gender : invariable Vowel start Lead

analyse Syntactic cats : no
Meaning no.1: predicate agent : bio 2 ani 2 hum 2 pot 2
uni 1 patient : bio 1 ani 1 hum 1 phy 1 abs 1 pot 1 uni
1 pre 1 Preps : de instrument : pre 2 Number :
si Gender : fem Vowel start Lead

ancien Syntactic cats : ad Number : si
Gender : mas Vowel start Non-lead

anglais Syntactic cats : ad no Number : si
Gender : mas Vowel start Lead
Meaning no.1 : argument SRs : abs 2 uni 2 Number :
si Gender : mas Vowel start Lead

anthroposophique Syntactic cats : ad Number :
si Gender : mas Vowel start Lead

antique Syntactic cats : no ad
Meaning no.1 : argument SRs : phy 2 pot 2 Number :
si Gender : fem Vowel start Lead Number
: si Gender : mas Vowel start Lead

Apollo Syntactic cats : nn
Meaning no.1 : argument SRs : phy 2 pot 2 uni 2 No.
& gender : invariable Vowel start Lead

Apollo-11 Syntactic cats : nn
Meaning no.1 : argument SRs : phy 2 pot 2 uni 2 No.
& gender : invariable Vowel start Lead

Apollo-12 Syntactic cats : nn
Meaning no.1 : argument SRs : phy 2 pot 2 uni 2 No.
& gender : invariable Vowel start Lead

Apollo-13 Syntactic cats : nn
Meaning no.1 : argument SRs : phy 2 pot 2 uni 2 No.
& gender : invariable Vowel start Lead

Apollo-14 Syntactic cats : nn
Meaning no.1 : argument SRs : phy 2 pot 2 uni 2 No.
& gender : invariable Vowel start Lead

Apollo-15 Syntactic cats : nn
Meaning no.1 : argument SRs : phy 2 pot 2 uni 2 No.
& gender : invariable Vowel start Lead

Apollo-16 Syntactic cats : nn
Meaning no.1 : argument SRs : phy 2 pot 2 uni 2 No.
& gender : invariable Vowel start Lead

Apollo-17 Syntactic cats : nn
Meaning no.1 : argument SRs : phy 2 pot 2 uni 2 No.
& gender : invariable Vowel start Lead

applications Syntactic cats : no
Meaning no.1: predicate agent : bio 2 ani 2 hum 2 pot 2
uni 1 patient : phy 1 abs 1 pot 1 uni 1 pre 1 Preps
: de beneficiary : pre 2 Preps : à dans Number
: pl Gender : Vowel start Lead

arpentage Syntactic cats : no
Meaning no.1: predicate agent : bio 2 ani 2 hum 2 pot 2
uni 1 patient : pla 2 uni 1 instrument : pre 2
Number : si Gender : mas Vowel start Lead

artificiel Syntactic cats : ad Number : si
Gender : mas Vowel start Lead

aspects Syntactic cats : no
Meaning no.1 : argument SRs : abs 2 Number : pl
Gender : mas Vowel start Non-lead

astrolabes Syntactic cats : no
Meaning no.1 : argument SRs : phy 2 Number : pl
Gender : fem Vowel start Lead

astrologie Syntactic cats : no
Meaning no.1: predicate agent : bio 2 ani 2 hum 2 pot 1
uni 1 Preps : par Number : si Gender : fem
Vowel start Lead

astronautes Syntactic cats : no
Meaning no.1 : argument SRs : bio 2 ani 2 hum 2 pot 2
Number : pl Gender : mas Vowel start Lead

astronautique Syntactic cats : ad no Number :
si Gender : mas Vowel start Lead
Meaning no.1: predicate agent : bio 1 ani 1 hum 1 pot 1
uni 1 Number : si Gender : fem Vowel start
Lead

astronomes Syntactic cats : no
Meaning no.1 : argument SRs : bio 2 ani 2 hum 2 pot 2
Number : pl Gender : mas Vowel start Lead

astronomes d'extrême-orient Syntactic cats : no
Meaning no.1 : argument SRs : bio 2 ani 2 hum 2 pot 2
Number : pl Gender : mas Vowel start Lead

astronomie Syntactic cats : no
Meaning no.1: predicate agent : bio 2 ani 2 hum 2 pot 1
uni 1 Preps : par Number : si Gender : fem
Vowel start Lead

astronomie à l'oeil Syntactic cats : no
Meaning no.1: predicate agent : bio 2 ani 2 hum 2 pot 2
uni 1 Number : si Gender : fem Vowel start
Lead

astronomie d'amateur Syntactic cats : no
Meaning no.1: predicate agent : bio 2 ani 2 hum 2 pot 2
uni 1 Number : si Gender : fem Vowel start
Lead

astronomie de l'infrarouge Syntactic cats : no
Meaning no.1: predicate agent : bio 2 ani 2 hum 2 pot 2
uni 1 Number : si Gender : fem Vowel start
Lead

astronomie du rayonnement Syntactic cats : no
Meaning no.1: predicate agent : bio 2 ani 2 hum 2 pot 2
uni 1 Number : si Gender : fem Vowel start
Lead

astronomie du rayonnement x Syntactic cats : no
Meaning no.1: predicate agent : bio 2 ani 2 hum 2 pot 2
uni 1 Number : si Gender : fem Vowel start
Lead

astronomique Syntactic cats : ad Number : si
Gender : mas Vowel start Lead

astrophysique Syntactic cats : ad no Number :
si Gender : mas Vowel start Lead
Meaning no.1: predicate agent : bio 2 ani 2 hum 2 pot 2
uni 1 Number : si Gender : fem Vowel start
Lead

atlas Syntactic cats : no
Meaning no.1 : argument SRs : phy 2 Number : pl
Gender : mas Vowel start Lead

atmosphère Syntactic cats : no

* * * continued * * *

* * * continuation * * *
Meaning no.1 : argument SRs : phy 2 Number : si
Gender : fem Vowel start Lead

atmosphères Syntactic cats : no
Meaning no.1 : argument SRs : phy 2 Number : pl
Gender : fem Vowel start Lead

automatique Syntactic cats : ad no Number : si
Gender : mas Vowel start Lead
Meaning no.1 : argument SRs : phy 2 pot 1 Number :
si Gender : mas Vowel start Lead

autour de Syntactic cats : pr Number : si
Gender : mas Vowel start Non-lead

avec Syntactic cats : pr No. & gender :
invariable Vowel start Non-lead

binaire Syntactic cats : ad Number : si
Gender : mas Lead

biographies Syntactic cats : no
Meaning no.1 : argument SRs : abs 2 Number : pl
Gender : fem Lead

blanc Syntactic cats : ad Number : si
Gender : mas Non-lead

britannique Syntactic cats : ad Number : si
Gender : mas Lead

British Museum (Natural History) Syntactic cats : nn
Meaning no.1 : argument SRs : pla 2 uni 2 No. &
gender : invariable Lead

cachots Syntactic cats : no
Meaning no.1 : argument SRs : phy 2 pot 2 Number :
pl Gender : mas Lead

cadrans Syntactic cats : no
Meaning no.1 : argument SRs : phy 2 Number : pl
Gender : mas Lead

calcul Syntactic cats : no
Meaning no.1: predicate agent : bio 2 ani 2 hum 2 pot 2
uni 1 Preps : par patient : phy 1 abs 1 pot 1 uni 1
pre 1 Preps : de instrument : phy 1 abs 1 pot 1 uni
1 pre 1 location : pla 2 pot 1 uni 1 Preps : à
Number : si Gender : mas Lead

calculateurs électroniques de poche Syntactic cats : no
Meaning no.1 : argument SRs : phy 2 pot 1 Number : pl Gender : mas Lead

calculs Syntactic cats : no
Meaning no.1 : argument SRs : abs 2 Number : pl Gender : mas Lead

Californie Syntactic cats : np
Meaning no.1 : argument SRs : pla 2 uni 2 Number : si Gender : fem Lead

Cambridge Syntactic cats : np
Meaning no.1 : argument SRs : pla 2 uni 2 No. & gender : invariable Lead

Cambridgeshire Syntactic cats : np
Meaning no.1 : argument SRs : pla 2 uni 2 No. & gender : invariable Lead

capsules Syntactic cats : no
Meaning no.1 : argument SRs : phy 2 Number : pl Gender : fem Lead

cartes Syntactic cats : no
Meaning no.1 : argument SRs : phy 2 Number : pl Gender : fem Non-lead

catalogues Syntactic cats : no
Meaning no.1 : argument SRs : phy 2 Number : pl Gender : mas Lead

céleste Syntactic cats : ad Number : si Gender : mas Lead

champs Syntactic cats : no
Meaning no.1 : argument SRs : phy 2 pla 1 Number : pl Gender : mas Lead

charge Syntactic cats : no
Meaning no.1 : argument SRs : phy 2 pot 2 Number : si Gender : fem Lead

chimique Syntactic cats : ad Number : si Gender : mas Lead

Chine Syntactic cats : np
Meaning no.1 : argument SRs : pla 2 uni 2 Number : si Gender : fem Lead

choix Syntactic cats : no
Meaning no.1: predicate agent : bio 2 ani 2 pot 1 uni 1 patient : bio 1 ani 1 hum 1 phy 1 abs 1 pla 1 pot 1 uni 1 pre 1 instrument : bio 1 ani 1 hum 1 phy 1 abs 1 pla 1 pot 1 uni 1 pre 1 Number : si Gender : mas Lead

chromosphère Syntactic cats : no
Meaning no.1 : argument SRs : phy 2 Number : si Gender : mas Lead

civilisations Syntactic cats : no
Meaning no.1 : argument SRs : abs 2 Number : pl Gender : fem Lead

Collins, Michael, b.1930 Syntactic cats : nn
Meaning no.1 : argument SRs : bio 2 ani 2 hum 2 pot 2 uni 2 Number : si Gender : mas Lead

comètes Syntactic cats : no
Meaning no.1 : argument SRs : phy 2 pot 2 Number : pl Gender : fem Lead

comme Syntactic cats : pr No. & gender : invariable Non-lead

comparé Syntactic cats : ve
Meaning no.1: predicate agent : bio 2 ani 2 hum 2 pot 2 uni 1 patient : phy 1 abs 1 pla 1 pot 1 uni 1 pre 1 Preps : avec beneficiary : phy 1 abs 1 pla 1 pot 1 uni 1 pre 1 Number : si Gender : mas Non-lead

composition Syntactic cats : no
Meaning no.1: predicate agent : bio 2 ani 2 hum 2 pot 2 uni 1 patient : phy 1 abs 1 pot 1 uni 1 Number : si Gender : fem Lead

comptes-rendus Syntactic cats : no
Meaning no.1 : argument SRs : abs 2 Number : pl Gender : mas Non-lead

conditions de vie Syntactic cats : no
Meaning no.1: predicate agent : bio 1 ani 1 hum 1 phy 1 pla 1 pot 1 uni 1 Number : pl Gender : fem Lead

constellations Syntactic cats : no
Meaning no.1 : argument SRs : phy 2 pla 1 Number : pl Gender : fem Lead

constituants Syntactic cats : no
Meaning no.1 : argument SRs : phy 2 Number : pl Gender : fem Lead

contrôle Syntactic cats : no
Meaning no.1: predicate agent : bio 2 ani 2 hum 2 pot 2 uni 1 beneficiary : bio 1 ani 1 hum 1 phy 1 abs 1 pla 1 pot 1 uni 1 pre 1 Number : si Gender : mas Lead

Copernic, Nicolas Syntactic cats : nn
Meaning no.1 : argument SRs : bio 2 ani 2 hum 2 pot 2 uni 2 Number : si Gender : mas Lead

corps Syntactic cats : no
Meaning no.1 : argument SRs : bio 1 ani 1 hum 1 phy 2 pot 2 Number : pl Gender : mas Lead

cosmique Syntactic cats : ad Number : si
Gender : mas Lead

cosmogonie Syntactic cats : no
Meaning no.1: predicate agent : bio 2 ani 2 hum 2 pot 2 uni 1 Number : si Gender : fem Lead

cosmographie Syntactic cats : no
Meaning no.1: predicate agent : bio 2 ani 2 hum 2 pot 2 uni 1 Number : si Gender : fem Lead

cosmologie Syntactic cats : no
Meaning no.1: predicate agent : bio 2 ani 2 hum 2 pot 2 uni 1 Number : si Gender : fem Lead

Cosmos Facility Syntactic cats : nn
Meaning no.1 : argument SRs : phy 2 pot 2 uni 2 No. & gender : invariable Lead

court Syntactic cats : ab Number : si
Gender : mas Non-lead

Crab Nebula Syntactic cats : np
Meaning no.1 : argument SRs : phy 2 pla 2 uni 2
Number : si Gender : fem Lead

critique Syntactic cats : ad no Number : si
Gender : mas Lead
Meaning no.1: predicate agent : bio 2 ani 2 hum 2 pot 2 uni 1 Preps : par patient : bio 1 ani 1 hum 1 phy 1 abs 1 pla 1 pot 1 uni 1 pre 1 Preps : de instrument : abs 1 uni 1 pre 1 Number : si Gender : fem
Lead

cromlechs Syntactic cats : no
Meaning no.1 : argument SRs : phy 2 pla 2 pot 1
Number : pl Gender : mas Lead

culturel Syntactic cats : ad Number : si
Gender : mas Non-lead

cycle de vie Syntactic cats : no
Meaning no.1 : argument SRs : phy 1 abs 1 pot 1
Number : si Gender : mas Lead

dans Syntactic cats : pr Number : si Gender
: mas Non-lead

de Syntactic cats : pr Number : si Gender :
mas Non-lead

décalage Syntactic cats : no
Meaning no.1 : argument SRs : phy 2 pla 2 pot 1
Number : si Gender : mas Lead

découverte Syntactic cats : no
Meaning no.1: predicate agent : bio 2 ani 2 hum 2 pot 2
uni 1 beneficiary : phy 1 abs 1 pla 1 pot 1 uni 1
instrument : phy 2 pot 1 uni 1 pre 2 Number : si
Gender : fem Lead

densité Syntactic cats : no
Meaning no.1 : argument SRs : phy 2 Number : si
Gender : fem Lead

depuis Syntactic cats : pr Number : si
Gender : mas Non-lead

désastres Syntactic cats : no
Meaning no.1 : argument SRs : abs 2 pot 2 Number :
pl Gender : mas Lead

descriptif Syntactic cats : ad Number : si
Gender : mas Lead

détermination Syntactic cats : no
Meaning no.1: predicate agent : bio 2 ani 2 hum 2 pot 2
uni 1 patient : phy 1 abs 1 uni 1 pre 1 Preps : de
instrument : phy 1 abs 1 pot 1 uni 1 pre 1 Preps : par
Number : si Gender : fem Lead

développement Syntactic cats : no
Meaning no.1: predicate agent : bio 2 ani 2 hum 2 pot 2
uni 1 beneficiary : bio 1 ani 1 hum 1 phy 1 abs 1 pla 1
pot 1 uni 1 pre 1 Preps : de Number : si Gender
: mas Lead

digital Syntactic cats : ad Number : si
Gender : mas Lead

dimensions Syntactic cats : no
Meaning no.1 : argument SRs : phy 2 Number : pl
Gender : fem Lead

distance Syntactic cats : no
Meaning no.1 : argument SRs : abs 1 pla 1 Number :
si Gender : fem Non-lead

distribution Syntactic cats : no
Meaning no.1: predicate agent : bio 2 ani 2 hum 2 pot 2
uni 1 patient : phy 1 abs 1 pot 1 uni 1 Preps : de
instrument : pre 2 Number : si Gender : fem Lead

données Syntactic cats : no
Meaning no.1 : argument SRs : abs 2 Number : pl
Gender : fem Non-lead

dynamique Syntactic cats : ad no Number : si
Gender : mas Lead
Meaning no.1 : argument SRs : abs 2 Number : si
Gender : fem Lead

dynamo Syntactic cats : no ad
Meaning no.1 : argument SRs : phy 2 pot 2 Number :
si Gender : fem Lead No. & gender :
invariable Lead

Dyson, Freeman John Syntactic cats : nn
Meaning no.1 : argument SRs : bio 2 ani 2 hum 2 pot 2
uni 2 Number : si Gender : mas Lead

East Sussex Syntactic cats : np
Meaning no.1 : argument SRs : pla 2 uni 2 No. &
gender : invariable Vowel start Lead

échanges Syntactic cats : no
Meaning no.1: predicate agent : bio 2 ani 2 hum 2 pot 2
uni 1 beneficiary : phy 2 pot 1 uni 1 instrument :
phy 2 pot 1 uni 1 Number : pl Gender : mas Vowel
start Lead

éclipses Syntactic cats : no
Meaning no.1 : argument SRs : abs 2
Meaning no.2: predicate agent : phy 2 pla 2 pot 2 uni 1
Number : pl Gender : fem Vowel start Lead

écoles Syntactic cats : no
Meaning no.1 : argument SRs : phy 2 pla 1 Number :
pl Gender : fem Vowel start Lead

économique Syntactic cats : ad no Number : si
Gender : mas Vowel start Lead
Meaning no.1: predicate agent : bio 2 ani 2 hum 2 pot 2
uni 1 experiencer : blocked patient : phy 1 pot 1
uni 1 pre 2 Number : si Gender : mas Vowel start
Lead

Édimbourg Syntactic cats : np
Meaning no.1 : argument SRs : pla 2 uni 2 Number :
si Gender : mas Vowel start Lead

effets Syntactic cats : no
Meaning no.1: predicate agent : phy 1 abs 1 pot 1 uni 1
pre 1 Preps : de beneficiary : bio 1 ani 1 hum 1 phy
1 abs 1 pla 1 pot 1 uni 1 pre 1 Preps : sur Number :
pl Gender : mas Vowel start Non-lead

élasticité Syntactic cats : no
Meaning no.1 : argument SRs : phy 2 pot 2 Number :
si Gender : fem Vowel start Lead

électrique Syntactic cats : ad Number : si
Gender : mas Vowel start Lead

électromagnétique Syntactic cats : ad
Number : si Gender : mas Vowel start Lead

électrons Syntactic cats : no
Meaning no.1 : argument SRs : phy 2 pot 2 Number :
pl Gender : mas Vowel start Lead

en Syntactic cats : pr Number : si Gender :
mas Vowel start Non-lead

encyclopédies Syntactic cats : no
Meaning no.1 : argument SRs : abs 2 Number : pl
Gender : fem Vowel start Lead

énergie Syntactic cats : no
Meaning no.1 : argument SRs : phy 2 pot 2 Number :
si Gender : fem Vowel start Lead

enfants Syntactic cats : no
Meaning no.1 : argument SRs : bio 2 ani 2 hum 2 pot 2
Number : pl Gender : mas Vowel start Lead

enseignement Syntactic cats : no
Meaning no.1: predicate agent : bio 2 ani 2 hum 2 pot 2
uni 1 beneficiary : bio 2 ani 2 hum 1 pot 2 uni 1
instrument : phy 1 abs 1 pot 1 uni 1 pre 1 Number : si
Gender : mas Vowel start Lead

entre Syntactic cats : pr No. & gender : invariable Vowel start Non-lead

équateur Syntactic cats : no
Meaning no.1 : argument SRs : pla 2 uni 2 Number : si Gender : mas Vowel start Lead

équinoxial Syntactic cats : ad Number : si
Gender : mas Vowel start Lead

équipment Syntactic cats : no
Meaning no.1 : argument SRs : phy 2 Number : si
Gender : mas Vowel start Lead

espace Syntactic cats : no
Meaning no.1 : argument SRs : phy 2 pla 1 pot 1 uni 1
Number : si Gender : mas Vowel start Lead

essai Syntactic cats : no
Meaning no.1: predicate agent : bio 2 ani 2 hum 2 pot 2 uni 1 patient : bio 1 ani 1 hum 1 phy 1 abs 1 pot 1 uni 1 pre 1 instrument : pre 2 Number : si Gender : mas Vowel start Lead

États-Unis Syntactic cats : np
Meaning no.1 : argument SRs : pla 2 uni 2 No. & gender : invariable Vowel start Lead

étoiles Syntactic cats : no
Meaning no.1 : argument SRs : phy 2 pla 2 pot 1
Number : pl Gender : fem Vowel start Lead

étoiles binaires s'éclipsant Syntactic cats : no
Meaning no.1 : argument SRs : phy 2 pla 2 pot 1
Number : pl Gender : fem Vowel start Lead

étoiles de neutrons Syntactic cats : no
Meaning no.1 : argument SRs : phy 2 pla 1 pot 2
Number : pl Gender : fem Vowel start Lead

étoiles en rotation Syntactic cats : no
Meaning no.1 : argument SRs : phy 2 pla 1 pot 2
Number : pl Gender : fem Vowel start Lead

étoiles variables à flare Syntactic cats : no
Meaning no.1 : argument SRs : phy 2 pla 1 pot 2
Number : pl Gender : fem Vowel start Lead

études Syntactic cats : no
Meaning no.1 : argument SRs : abs 2 Number : pl
Gender : fem Vowel start Lead

études de faisabilité Syntactic cats : no
Meaning no.1 : argument SRs : abs 2 Number : pl
Gender : fem Vowel start Lead

étudié Syntactic cats : ad Number : si
Gender : mas Vowel start Non-lead

Europe Syntactic cats : np
Meaning no.1 : argument SRs : pla 2 uni 2 Number :
si Gender : fem Vowel start Lead

évolution Syntactic cats : no
Meaning no.1: predicate agent : bio 1 ani 1 hum 1 phy 1
abs 1 pla 1 pot 1 uni 1 Preps : de thru loc. : pre 2
Preps : au cours de Number : si Gender : fem
Vowel start Lead

exploration Syntactic cats : no
Meaning no.1: predicate agent : bio 2 ani 2 hum 2 pot 2
uni 1 Preps : par patient : phy 1 pla 2 pot 1 uni 1
Preps : de instrument : pre 2 Number : si Gender
: fem Vowel start Lead

extragalactique Syntactic cats : ad Number : si
Gender : mas Vowel start Lead

facsimilés Syntactic cats : no
Meaning no.1 : argument SRs : phy 2 Number : pl
Gender : mas Lead

ferreux Syntactic cats : ad Number : si
Gender : mas Lead

formation Syntactic cats : no
Meaning no.1: predicate agent : bio 2 ani 2 hum 2 pot 2
uni 1 patient : phy 1 abs 1 pot 1 uni 1 beneficiary
: blocked instrument : phy 1 abs 1 pot 1 uni 1 pre 1
Number : si Gender : fem Lead

forme Syntactic cats : no
Meaning no.1 : argument SRs : phy 2 Number : si
Gender : fem Lead

froid Syntactic cats : ad Number : si
Gender : mas Lead

fusées Syntactic cats : no
Meaning no.1 : argument SRs : phy 2 pot 2 Number :
pl Gender : fem Lead

galactique Syntactic cats : ad Number : si
Gender : mas Lead

Galaxie Syntactic cats : np
Meaning no.1 : argument SRs : phy 2 pla 2 pot 2 uni 2
Number : si Gender : fem Lead

galaxies Syntactic cats : no
Meaning no.1 : argument SRs : phy 2 pla 2 pot 1
Number : pl Gender : fem Lead

Galilei, Galileo Syntactic cats : nn
Meaning no.1 : argument SRs : bio 2 ani 2 hum 2 pot 2
uni 2 Number : si Gender : mas Lead

gamma Syntactic cats : ad No. & gender :
invariable Lead

géant Syntactic cats : ad Number : si
Gender : mas Lead

geophysique Syntactic cats : ad no Number : si
Gender : mas Lead
Meaning no.1: predicate agent : bio 2 ani 2 hum 2 pot 2
uni 1 Number : si Gender : fem Lead

globulaire Syntactic cats : ad no Number : si
Gender : mas Lead
Meaning no.1 : argument SRs : bio 2 Number : si
Gender : fem Lead

gouvernement Syntactic cats : no
Meaning no.1 : argument SRs : abs 2 pot 2
Meaning no.2: predicate agent : bio 1 ani 1 hum 1 abs 1
pot 2 uni 1 beneficiary : bio 1 ani 1 hum 1 abs 1 pla 1
pot 1 uni 1 pre 1 Number : si Gender : mas Lead

grand Syntactic cats : ab Number : si
Gender : mas Non-lead

Grand Nuage de Magellan Syntactic cats : np
Meaning no.1 : argument SRs : phy 2 pla 2 uni 2
Number : si Gender : mas Non-lead

Grande-Bretagne Syntactic cats : np
Meaning no.1 : argument SRs : pla 2 uni 2 Number :
si Gender : fem Lead

Grande Ourse Syntactic cats : np
Meaning no.1 : argument SRs : phy 2 pla 2 uni 2
Number : si Gender : fem Lead

Grande pyramide Syntactic cats : nn
Meaning no.1 : argument SRs : phy 2 pla 2 uni 2
Number : si Gender : fem Lead

gravitationnel Syntactic cats : ad Number : si
Gender : mas Lead

Greenwich (borough de Londres) Syntactic cats : np
Meaning no.1 : argument SRs : pla 2 uni 2 No. &
gender : invariable Lead

guides Syntactic cats : no
Meaning no.1 : argument SRs : bio 1 ani 1 hum 1 abs 1
pot 1 Number : pl Gender : mas Lead

guides des carrières Syntactic cats : no
Meaning no.1 : argument SRs : abs 2 Number : pl
Gender : mas Lead

habité Syntactic cats : ad Number : si
Gender : mas Vowel start Lead

hémisphère Syntactic cats : no
Meaning no.1 : argument SRs : pla 2 Number : si
Gender : mas Vowel start Lead

Herschel, Sir John, 1st bart Syntactic cats : nn
Meaning no.1 : argument SRs : bio 2 ani 2 hum 2 pot 2
uni 2 Number : si Gender : mas Vowel start
Lead

Herstmonceaux Syntactic cats : np
Meaning no.1 : argument SRs : pla 2 uni 2 No. &
gender : invariable Vowel start Lead

Hoerbiger, Hans Syntactic cats : nn
Meaning no.1 : argument SRs : bio 2 ani 2 hum 2 pot 2
uni 2 Number : si Gender : mas Vowel start
Lead

homme Syntactic cats : no
Meaning no.1 : argument SRs : bio 2 ani 2 hum 2 pot 2
Number : si Gender : mas Vowel start Lead

humain Syntactic cats : ad Number : si
Gender : mas Lead

identification Syntactic cats : no
Meaning no.1: predicate agent : bio 2 ani 2 hum 2 pot 2
uni 1 patient : bio 1 ani 1 hum 1 phy 1 abs 1 pla 1 pot
1 uni 1 pre 1 beneficiary : bio 1 ani 1 hum 1 phy 1 abs
1 pla 1 pot 1 uni 1 pre 1 instrument : phy 1 abs 1 pot 1
uni 1 pre 1 Number : si Gender : fem Vowel start
Lead

illustrations Syntactic cats : no

* * * continued * * *

* * * continuation * * *
Meaning no.1 : argument SRs : phy 2 Number : pl
Gender : fem Vowel start Lead

images Syntactic cats : no
Meaning no.1 : argument SRs : phy 1 abs 1 Number :
pl Gender : fem Vowel start Lead

implications Syntactic cats : no
Meaning no.1: predicate patient : bio 1 ani 1 hum 1 phy
1 abs 1 pla 1 pot 1 uni 1 pre 1 beneficiary : bio 1 ani
1 hum 1 phy 1 abs 1 pla 1 pot 1 uni 1 pre 1 Number : pl
Gender : fem Vowel start Non-lead

influence Syntactic cats : no
Meaning no.1: predicate patient : bio 1 ani 1 hum 1 phy
1 abs 1 pla 1 pot 1 uni 1 pre 1 Preps : de
beneficiary : bio 1 ani 1 hum 1 phy 1 abs 1 pla 1 pot 1 uni
1 pre 1 Preps : sur Number : si Gender : fem
Vowel start Non-lead

instantané Syntactic cats : ad Number : si
Gender : mas Vowel start Lead

institutions Syntactic cats : no
Meaning no.1 : argument SRs : abs 2 pot 2 Number :
pl Gender : fem Vowel start Non-lead

instrumentation Syntactic cats : no
Meaning no.1 : argument SRs : phy 2
Meaning no.2: predicate agent : bio 2 ani 2 hum 2 pot 2
uni 1 patient : phy 1 abs 1 pot 1 uni 1 Number : si
Gender : fem Vowel start Lead

interactions Syntactic cats : no
Meaning no.1: predicate agent : bio 1 ani 1 hum 1 phy 1
abs 1 pla 1 pot 1 uni 1 pre 1 Preps : de beneficiary
: bio 1 ani 1 hum 1 phy 1 abs 1 pla 1 pot 1 uni 1 pre 1
Preps : avec Number : pl Gender : fem Vowel
start Lead

intérferomètres d'intensité Syntactic cats : no
Meaning no.1 : argument SRs : phy 2 pot 1 Number :
pl Gender : mas Vowel start Lead

intérieurs Syntactic cats : no
Meaning no.1 : argument SRs : phy 2 pla 2 Number :
pl Gender : mas Vowel start Lead

interplanétaire Syntactic cats : ad Number :
si Gender : mas Vowel start Lead

interprétation Syntactic cats : no
Meaning no.1: predicate agent : bio 2 ani 2 hum 2 pot 2 uni 1 Preps : par patient : bio 1 ani 1 hum 1 phy 1 abs 1 pla 1 pot 1 uni 1 pre 1 Preps : de Number : si Gender : fem Vowel start Lead

intersidéral Syntactic cats : ad Number : si Gender : mas Vowel start Lead

interstellaire Syntactic cats : ad Number : si Gender : mas Vowel start Lead

Irwin, James Benson Syntactic cats : nn
Meaning no.1 : argument SRs : bio 2 ani 2 hum 2 pot 2 uni 2 Number : si Gender : mas Vowel start Lead

islamique Syntactic cats : ad Number : si Gender : mas Vowel start Lead

Japon Syntactic cats : np
Meaning no.1 : argument SRs : pla 2 uni 2 Number : si Gender : mas Lead

jonction Syntactic cats : no
Meaning no.1: predicate agent : phy 2 pot 2 uni 1 beneficiary : phy 2 pot 2 uni 1 Number : si Gender : fem Lead

Jupiter Syntactic cats : np
Meaning no.1 : argument SRs : phy 2 pla 2 uni 2 Number : si Gender : mas Lead

jusqu'à Syntactic cats : pr No. & gender : invariable Non-lead

Kensington and Chelsea (borough de Londres)
Syntactic cats : np
Meaning no.1 : argument SRs : pla 2 uni 2 No. & gender : invariable Lead

latin Syntactic cats : ad no Number : si Gender : mas Lead
Meaning no.1 : argument SRs : abs 2 uni 2 Number : si Gender : mas Lead

le Syntactic cats : de Number : si Gender : mas Non-lead

lectures Syntactic cats : no
Meaning no.1 : argument SRs : abs 2 Number : pl Gender : fem Lead

léger Syntactic cats : ad Number : si
Gender : mas Lead

légèreté Syntactic cats : no
Meaning no.1: predicate agent : bio 2 ani 2 hum 2 pot 2 uni 1 Preps : par patient : bio 1 ani 1 hum 1 phy 1 pot 1 uni 1 Preps : de instrument : pre 2 Number : si Gender : fem Lead

lignes de recombinaison Syntactic cats : no
Meaning no.1 : argument SRs : phy 2 Number : pl
Gender : fem Lead

limites Syntactic cats : no
Meaning no.1 : argument SRs : abs 1 pla 1 Number : pl Gender : fem Lead

livre d'or Syntactic cats : no
Meaning no.1 : argument SRs : abs 2 Number : si
Gender : mas Lead

lois de Képler Syntactic cats : no
Meaning no.1 : argument SRs : abs 2 pot 2 Number : pl Gender : fem Lead

Londres Syntactic cats : np
Meaning no.1 : argument SRs : pla 2 uni 2 Number : si Gender : fem Lead

longitude 140° Syntactic cats : no
Meaning no.1 : argument SRs : pla 2 uni 2 Number : si Gender : fem Non-lead

lontain Syntactic cats : ad Number : si
Gender : mas Non-lead

lumière Syntactic cats : no
Meaning no.1 : argument SRs : phy 2 pot 2 Number : si Gender : fem Lead

lune Syntactic cats : np
Meaning no.1 : argument SRs : pla 2 pot 2 uni 2
Number : si Gender : fem Lead

machines Syntactic cats : no
Meaning no.1 : argument SRs : phy 2 pot 2 Number : pl Gender : fem Lead

magnétique Syntactic cats : ad Number : si
Gender : mas Lead

magnitude Syntactic cats : no

* * * continued * * *

* * * continuation * * *
Meaning no.1 : argument SRs : abs 2 Number : si
Gender : fem Lead

manuels Syntactic cats : no
Meaning no.1 : argument SRs : abs 2 Number : pl
Gender : mas Lead

Mariner-10 Syntactic cats : nn
Meaning no.1 : argument SRs : phy 2 pot 2 uni 2 No.
& gender : invariable Lead

Mariner-6 Syntactic cats : nn
Meaning no.1 : argument SRs : phy 2 pot 2 uni 2 No.
& gender : invariable Lead

Mariner-6 & 7 Syntactic cats : nn
Meaning no.1 : argument SRs : phy 2 pot 2 uni 2 No.
& gender : invariable Lead

Mariner-7 Syntactic cats : nn
Meaning no.1 : argument SRs : phy 2 pot 2 uni 2 No.
& gender : invariable Lead

Mariner-9 Syntactic cats : nn
Meaning no.1 : argument SRs : phy 2 pot 2 uni 2 No.
& gender : invariable Lead

Mars Syntactic cats : np
Meaning no.1 : argument SRs : phy 2 pla 2 uni 2
Number : si Gender : mas Lead

masers Syntactic cats : no
Meaning no.1 : argument SRs : phy 2 pot 2 Number :
pl Gender : mas Lead

mathématique Syntactic cats : ad no Number :
si Gender : mas Lead
Meaning no.1: predicate agent : bio 2 ani 2 hum 2 pot 2
uni 1 Number : si Gender : fem Lead

mathématiques Syntactic cats : no
Meaning no.1: predicate agent : bio 2 ani 2 hum 2 pot 2
uni 1 Number : pl Gender : fem Lead

matière Syntactic cats : no
Meaning no.1 : argument SRs : phy 2 Number : si
Gender : fem Lead

matières d'enseignement Syntactic cats : no
Meaning no.1 : argument SRs : phy 2 Number : pl
Gender : fem Lead

mécanique Syntactic cats : ad no Number : si
Gender : mas Lead
Meaning no.1 : argument SRs : abs 2
Meaning no.2: predicate agent : bio 2 ani 2 hum 2 pot 2
uni 2 Preps : par patient : phy 2 pot 1 uni 1 pre 1
Preps : de Number : si Gender : fem Lead

mégalithique Syntactic cats : ad Number : si
Gender : mas Lead

Mercure Syntactic cats : np
Meaning no.1 : argument SRs : phy 2 pla 2 pot 1 uni 2
Number : si Gender : mas Lead

mesure Syntactic cats : no
Meaning no.1: predicate agent : bio 2 ani 2 hum 2 pot 2
uni 1 patient : bio 1 ani 1 hum 1 phy 1 pla 1 pot 1 uni
1 pre 1 instrument : phy 1 abs 1 pot 1 uni 1 pre 1
Number : si Gender : fem Lead

météores Syntactic cats : no
Meaning no.1 : argument SRs : phy 2 pot 1 Number :
pl Gender : mas Lead

météorites Syntactic cats : no
Meaning no.1 : argument SRs : phy 2 pot 1 Number :
pl Gender : mas Lead

Mexique Syntactic cats : np
Meaning no.1 : argument SRs : pla 2 uni 2 Number :
si Gender : mas Lead

modèles Syntactic cats : no
Meaning no.1 : argument SRs : phy 1 abs 1 pot 1
Number : pl Gender : mas Lead

modèles de fusées Syntactic cats : no
Meaning no.1 : argument SRs : phy 1 abs 1 pot 1
Number : pl Gender : mas Lead

moléculaire Syntactic cats : ad Number : si
Gender : mas Lead

molécules Syntactic cats : no
Meaning no.1 : argument SRs : phy 2 pot 2 Number :
pl Gender : fem Lead

monde Syntactic cats : no
Meaning no.1 : argument SRs : pla 2 Number : si
Gender : mas Lead

Mont-Palomar Syntactic cats : nn

* * * continued * * *

* * * continuation * * *
Meaning no.1 : argument SRs : pla 2 uni 2 Number : si Gender : mas Lead

monuments Syntactic cats : no
Meaning no.1 : argument SRs : phy 2 pla 2 pot 1
Number : pl Gender : mas Lead

mouvement Syntactic cats : no
Meaning no.1: predicate agent : bio 1 ani 1 hum 1 phy 1 pla 1 pot 1 uni 1 pre 1 Preps : de location : bio 1 ani 1 hum 1 phy 1 pla 1 pot 1 uni 1 Number : si
Gender : mas Lead

musées Syntactic cats : no
Meaning no.1 : argument SRs : pla 2 Number : pl
Gender : mas Lead

naines Syntactic cats : no
Meaning no.1 : argument SRs : phy 2 pla 2 pot 1
Number : pl Gender : fem Lead

navettes Syntactic cats : no
Meaning no.1 : argument SRs : phy 2 pot 1 Number : pl Gender : fem Lead

navigation Syntactic cats : no
Meaning no.1: predicate agent : bio 2 ani 2 hum 1 pot 2 uni 1 patient : pla 2 uni 1 instrument : phy 1 pla 1 pot 1 uni 1 pre 1 Number : si Gender : fem Lead

nebulaire Syntactic cats : ad Number : si
Gender : mas Lead

nébuleuses Syntactic cats : no
Meaning no.1 : argument SRs : phy 2 pla 2 Number : pl Gender : fem Lead

Neptune Syntactic cats : np
Meaning no.1 : argument SRs : phy 2 pla 2 uni 2
Number : si Gender : mas Lead

Newton, Sir Isaac Syntactic cats : nn
Meaning no.1 : argument SRs : bio 2 ani 2 hum 2 pot 2 uni 2 Number : si Gender : mas Lead

nife Syntactic cats : no
Meaning no.1 : argument SRs : phy 2 pot 1 Number : si Gender : mas Lead

nord Syntactic cats : no ad
Meaning no.1 : argument SRs : pla 2 Number : si
Gender : mas Lead No. & gender : invariable
Lead

novae Syntactic cats : no
Meaning no.1 : argument SRs : phy 2 pla 2 pot 1
Number : si Gender : fem Lead

noyau Syntactic cats : no
Meaning no.1 : argument SRs : phy 2 pot 1 Number :
si Gender : mas Lead

noyaux Syntactic cats : no
Meaning no.1 : argument SRs : phy 2 Number : pl
Gender : mas Lead

nu Syntactic cats : ad Number : si Gender :
mas Lead

nuages Syntactic cats : no
Meaning no.1 : argument SRs : phy 2 Number : pl
Gender : mas Lead

nucléaire Syntactic cats : ad Number : si
Gender : mas Lead

nutation Syntactic cats : no
Meaning no.1: predicate agent : phy 2 pla 2 pot 2 uni 2
Number : si Gender : fem Lead

ob Syntactic cats : ad No. & gender :
invariable Vowel start Lead

observation Syntactic cats : no
Meaning no.1: predicate agent : bio 2 ani 2 hum 2 pot 2
uni 1 Preps : par patient : bio 1 ani 1 hum 1 phy 1
abs 1 pla 1 pot 1 uni 1 pre 1 Preps : de instrument
: pre 2 from loc. : phy 1 pla 1 pot 1 uni 1 Preps :
à Number : si Gender : fem Vowel start
Lead

observations Syntactic cats : no
Meaning no.1 : argument SRs : abs 2 Number : pl
Gender : fem Vowel start Lead

observatoires Syntactic cats : no
Meaning no.1 : argument SRs : phy 2 Number : pl
Gender : mas Vowel start Lead

oeuvres Syntactic cats : no
Meaning no.1 : argument SRs : abs 2 Number : pl
Gender : fem Vowel start Lead

Oort, Jan Hendrik Syntactic cats : nn
Meaning no.1 : argument SRs : bio 2 ani 2 hum 2 pot 2 uni 2 Number : si Gender : mas Vowel start Lead

optimisation Syntactic cats : no
Meaning no.1: predicate agent : bio 2 ani 2 hum 2 pot 2 uni 1 patient : phy 1 abs 1 pot 1 uni 1 pre 1 instrument : pre 2 Number : si Gender : fem Vowel start Lead

optique Syntactic cats : no ad
Meaning no.1: predicate agent : bio 1 ani 1 hum 1 phy 1 pot 1 uni 1 Number : si Gender : fem Vowel start Lead Number : si Gender : mas Vowel start Lead

orages de bruit Syntactic cats : no
Meaning no.1 : argument SRs : phy 2 pot 2 Number : pl Gender : mas Vowel start Lead

orbite Syntactic cats : no
Meaning no.1: predicate agent : phy 2 pla 2 pot 2 uni 1 Number : si Gender : fem Vowel start Lead

orbites Syntactic cats : no
Meaning no.1 : argument SRs : abs 2 Number : pl Gender : fem Vowel start Lead

ordinateurs Syntactic cats : no
Meaning no.1 : argument SRs : phy 2 pot 2 Number : pl Gender : mas Vowel start Lead

organisation Syntactic cats : no
Meaning no.1: predicate agent : bio 2 ani 2 hum 2 pot 2 uni 1 patient : bio 1 ani 1 hum 1 phy 1 abs 1 pla 1 pot 1 uni 1 pre 1 location : pla 2 uni 1 Number : si Gender : fem Vowel start Lead

organisations Syntactic cats : no
Meaning no.1 : argument SRs : abs 2 pot 1 Number : pl Gender : fem Vowel start Lead

organisations de recherche Syntactic cats : no
Meaning no.1 : argument SRs : abs 2 pot 1 Number : pl Gender : fem Vowel start Lead

origine Syntactic cats : no
Meaning no.1: predicate agent : bio 1 ani 1 hum 1 phy 1 abs 1 pla 1 pot 1 uni 1 pre 1 Number : si Gender : fem Vowel start Lead

origines Syntactic cats : no
Meaning no.1 : argument SRs : abs 2 Number : pl
Gender : fem Vowel start Lead

origins Syntactic cats : no
Meaning no.1 : argument SRs : abs 2 Number : pl
Gender : fem Vowel start Lead

par Syntactic cats : pr Number : si Gender
: mas Non-lead

parallèle Syntactic cats : ad no Number : si
Gender : mas Lead
Meaning no.1 : argument SRs : abs 2 Number : si
Gender : fem Lead

Pays-Bas Syntactic cats : np
Meaning no.1 : argument SRs : pla 2 uni 2 Number :
pl Gender : mas Lead

peintures Syntactic cats : no
Meaning no.1: predicate agent : bio 2 ani 2 hum 2 pot 2
uni 1 patient : bio 1 ani 1 hum 1 phy 1 abs 1 pla 1 pot
1 uni 1 pre 1 Number : pl Gender : fem Lead

pendant Syntactic cats : pr No. & gender :
invariable Non-lead

périodiques Syntactic cats : no
Meaning no.1 : argument SRs : abs 2 Number : pl
Gender : mas Lead

personnel Syntactic cats : ad Number : si
Gender : mas Lead

perturbations Syntactic cats : no
Meaning no.1 : argument SRs : phy 2 pot 2 Number :
pl Gender : fem Lead

Petit Nuage de Magellan Syntactic cats : np
Meaning no.1 : argument SRs : phy 2 pot 2 uni 2
Number : si Gender : mas Lead

photographies Syntactic cats : no
Meaning no.1 : argument SRs : phy 2 Number : pl
Gender : fem Lead

photométrie Syntactic cats : no
Meaning no.1: predicate agent : bio 2 ani 2 hum 2 pot 2
uni 1 patient : phy 2 pot 1 uni 1 Number : si
Gender : fem Lead

photosphères Syntactic cats : no
Meaning no.1 : argument SRs : phy 2 Number : si
Gender : fem Lead

photovisuel Syntactic cats : ad Number : si
Gender : mas Lead

physique Syntactic cats : ad no Number : si
Gender : mas Lead
Meaning no.1: predicate agent : bio 2 ani 2 hum 2 pot 2
uni 1 Number : si Gender : fem Lead

planétariums Syntactic cats : no
Meaning no.1 : argument SRs : phy 2 Number : pl
Gender : mas Lead

planètes Syntactic cats : no
Meaning no.1 : argument SRs : phy 2 pla 1 pot 1
Number : pl Gender : fem Lead

planisphère Syntactic cats : ad Number : si
Gender : mas Lead

plasmas Syntactic cats : no
Meaning no.1 : argument SRs : phy 2 pot 2 Number :
pl Gender : mas Lead

plasmique Syntactic cats : ad Number : si
Gender : mas Lead

Pluton Syntactic cats : np
Meaning no.1 : argument SRs : phy 2 pla 2 uni 2
Number : si Gender : mas Lead

poèmes Syntactic cats : no
Meaning no.1 : argument SRs : abs 2 Number : pl
Gender : mas Lead

points de vue Syntactic cats : no
Meaning no.1 : argument SRs : abs 2 Number : pl
Gender : mas Lead

polarité Syntactic cats : no
Meaning no.1 : argument SRs : phy 2 pot 2 Number :
si Gender : fem Lead

politique Syntactic cats : no
Meaning no.1 : argument SRs : abs 2 pot 2
Meaning no.2: predicate agent : bio 1 ani 1 hum 1 pot 2
uni 1 beneficiary : bio 1 ani 1 hum 1 phy 1 abs 1 pla 1
pot 1 uni 1 pre 1 Number : si Gender : fem Lead

pour Syntactic cats : pr Number : si Gender : mas Non-lead

poussières Syntactic cats : no
Meaning no.1 : argument SRs : phy 2 Number : pl
Gender : fem Lead

precolombien Syntactic cats : ad Number : si
Gender : mas Lead

premier Syntactic cats : ab Number : si
Gender : mas Lead

près de Syntactic cats : pr Number : si
Gender : mas Non-lead

prévision Syntactic cats : no
Meaning no.1: predicate agent : bio 2 ani 2 hum 2 pot 2 uni 1 patient : phy 1 pot 1 uni 1 pre 1 instrument : phy 1 abs 1 pot 1 uni 1 pre 1 Number : si Gender : fem Lead

prévisions Syntactic cats : no
Meaning no.1 : argument SRs : abs 2 Number : pl
Gender : fem Lead

primaire Syntactic cats : ad Number : si
Gender : mas Non-lead

pris Syntactic cats : ve
Meaning no.1: predicate agent : bio 2 ani 2 hum 2 phy 2 pot 2 uni 1 Preps : par patient : bio 1 ani 1 hum 1 phy 1 abs 1 pla 1 pot 1 uni 1 pre 1 Preps : de factitive : phy 2 pot 2 uni 1 instrument : phy 2 uni 1 from loc. : phy 1 pla 1 uni 1 Preps : à Number : si Gender : mas Non-lead

processus Syntactic cats : no
Meaning no.1 : argument SRs : abs 2 pot 2 Number : pl Gender : mas Lead

proche Syntactic cats : ad Number : si
Gender : mas Non-lead

Procyon Syntactic cats : np
Meaning no.1 : argument SRs : phy 2 pla 2 uni 2 No. & gender : invariable Lead

programmé Syntactic cats : ad Number : si
Gender : mas Non-lead

Programme spacelab Syntactic cats : nn

* * * continued * * *

* * * continuation * * *
Meaning no.1 : argument SRs : abs 2 uni 2 Number : si Gender : mas Lead

programme Viking Syntactic cats : nn
Meaning no.1 : argument SRs : abs 2 pot 1 uni 2
Number : si Gender : mas Lead

Projet Apollo Syntactic cats : nn
Meaning no.1 : argument SRs : abs 2 pot 2 uni 2
Number : si Gender : mas Lead

projet Apollo-Soyouz Syntactic cats : nn
Meaning no.1 : argument SRs : abs 2 pot 2 uni 2
Number : si Gender : mas Lead

projet Daedalus Syntactic cats : nn
Meaning no.1 : argument SRs : abs 2 uni 2 Number : si Gender : mas Lead

projets Syntactic cats : no
Meaning no.1 : argument SRs : abs 2 Number : pl
Gender : mas Lead

projets de recherche Syntactic cats : no
Meaning no.1 : argument SRs : abs 2 Number : si
Gender : mas Lead

propre Syntactic cats : ad no Number : si
Gender : mas Lead
Meaning no.1 : argument SRs : abs 2 Number : si
Gender : mas Lead

propriétés Syntactic cats : no
Meaning no.1 : argument SRs : abs 2 Number : pl
Gender : fem Lead

propulsion Syntactic cats : no
Meaning no.1: predicate agent : phy 2 pot 2 uni 1
beneficiary : phy 2 pot 2 uni 1 Number : si Gender : fem Lead

Ptolémée, Claude Syntactic cats : nn
Meaning no.1 : argument SRs : bio 2 ani 2 hum 2 pot 2 uni 2 Number : si Gender : mas Lead

pulsant Syntactic cats : ad Number : si
Gender : mas Lead

pulsars Syntactic cats : no
Meaning no.1 : argument SRs : phy 2 pot 2 Number : si Gender : mas Lead

quasars Syntactic cats : no
Meaning no.1 : argument SRs : phy 2 pot 2 Number : pl Gender : mas Lead

questions Syntactic cats : no
Meaning no.1 : argument SRs : abs 2 Number : pl Gender : fem Lead

radioastronomie Syntactic cats : no
Meaning no.1: predicate agent : bio 2 ani 2 hum 2 pot 2 uni 1 Number : si Gender : fem Lead

radioélectrique Syntactic cats : ad Number : si Gender : mas Lead

radiogalaxies Syntactic cats : no
Meaning no.1 : argument SRs : phy 2 pla 2 pot 1 Number : pl Gender : fem Lead

radiotélescopes Syntactic cats : no
Meaning no.1 : argument SRs : phy 2 Number : pl Gender : mas Lead

rayonnement Syntactic cats : no
Meaning no.1 : argument SRs : pot 2
Meaning no.2: predicate agent : phy 2 pla 1 pot 2 uni 1 Number : si Gender : mas Lead

rayons Syntactic cats : no
Meaning no.1 : argument SRs : phy 2 pot 2 Number : pl Gender : mas Lead

recherche Syntactic cats : no
Meaning no.1: predicate agent : bio 2 ani 2 hum 2 pot 2 uni 1 patient : bio 1 ani 1 hum 1 phy 1 abs 1 pla 1 pot 1 uni 1 pre 1 Number : si Gender : fem Lead

réfraction Syntactic cats : no
Meaning no.1: predicate agent : bio 2 ani 2 hum 2 pot 2 uni 1 patient : phy 1 abs 1 pot 1 uni 1 instrument : phy 1 pot 1 uni 1 pre 1 Number : si Gender : fem Lead

région Syntactic cats : no
Meaning no.1 : argument SRs : pla 2 Number : si Gender : fem Lead

régions Syntactic cats : no
Meaning no.1 : argument SRs : pla 2 Number : pl Gender : fem Lead

relaté Syntactic cats : ve
Meaning no.1: predicate agent : bio 2 ani 2 hum 2 pot 2 uni 1 patient : phy 1 pla 1 pot 1 uni 1 pre 1 beneficiary : phy 1 abs 1 pot 1 uni 1 pre 1 Number : si Gender : mas Non-lead

relativiste Syntactic cats : ad Number : si Gender : mas Lead

rétrograde Syntactic cats : ad Number : si Gender : mas Lead

revues de recherche Syntactic cats : no
Meaning no.1 : argument SRs : abs 2 Number : pl Gender : fem Lead

rôle Syntactic cats : no
Meaning no.1: predicate agent : bio 1 ani 1 hum 1 abs 1 pot 2 uni 1 pre 1 Preps : de beneficiary : pre 2 Preps : dans thru loc. : pre 2 Preps : au cours de Number : si Gender : mas Lead

rotation Syntactic cats : no
Meaning no.1: predicate agent : bio 1 ani 1 hum 1 phy 1 pla 1 pot 2 uni 1 patient : bio 2 Number : si Gender : fem Lead

rouge Syntactic cats : ad no Number : si Gender : mas Lead
Meaning no.1 : argument SRs : abs 2 Number : si Gender : mas Lead

Royal Greenwich Observatory Syntactic cats : nn
Meaning no.1 : argument SRs : phy 2 pla 2 pot 1 uni 2 No. & gender : invariable Lead

Royal Observatory, Edimbourgh Syntactic cats : nn
Meaning no.1 : argument SRs : phy 2 pla 2 pot 1 uni 2 No. & gender : invariable Lead

Royal Observatory, Edimbourgh. U.K. Infrared Telescope Unit Syntactic cats : nn
Meaning no.1 : argument SRs : phy 2 pla 2 uni 2 No. & gender : invariable Lead

russe Syntactic cats : ad Number : si Gender : mas Lead

satellites Syntactic cats : no
Meaning no.1 : argument SRs : phy 2 pla 1 pot 1 Number : pl Gender : mas Lead

satellites Syntactic cats : no
Meaning no.1 : argument SRs : phy 2 pla 1 pot 1
Number : pl Gender : mas Lead

Saturne Syntactic cats : np
Meaning no.1 : argument SRs : phy 2 pla 2 uni 2
Number : si Gender : mas Lead

Science Research Council (Grande-Bretagne). Solar System Committee Syntactic cats : nn
Meaning no.1 : argument SRs : abs 2 uni 2 No. & gender : invariable Lead

secondaire Syntactic cats : ad Number : si
Gender : mas Lead

simulation Syntactic cats : no
Meaning no.1: predicate agent : bio 2 ani 2 hum 2 pot 2 uni 1 patient : bio 1 ani 1 hum 1 phy 1 abs 1 pla 1 pot 1 uni 1 pre 1 Preps : de instrument : phy 1 abs 1 pot 2 uni 1 pre 1 Number : si Gender : fem Lead

singularités Syntactic cats : no
Meaning no.1 : argument SRs : phy 2 Number : pl
Gender : fem Lead

Skylab Syntactic cats : nn
Meaning no.1 : argument SRs : phy 2 pot 2 uni 2 No. & gender : invariable Lead

Smith, Ralph A Syntactic cats : nn
Meaning no.1 : argument SRs : bio 2 ani 2 hum 2 pot 2 uni 2 Number : si Gender : mas Lead

solaire Syntactic cats : ad Number : si
Gender : mas Lead

soleil Syntactic cats : no
Meaning no.1 : argument SRs : phy 2 pla 2 pot 2 uni 2
Number : si Gender : mas Lead

solutions Syntactic cats : no
Meaning no.1 : argument SRs : abs 2 Number : pl
Gender : fem Non-lead

sources Syntactic cats : no
Meaning no.1 : argument SRs : phy 2 pla 1 pot 1
Number : pl Gender : fem Lead

soviétique Syntactic cats : ad Number : si
Gender : mas Lead

Soyouz-19 Syntactic cats : nn
Meaning no.1 : argument SRs : phy 2 pot 2 uni 2 No. & gender : invariable Lead

spatial Syntactic cats : ad Number : si
Gender : mas Non-lead

spectres Syntactic cats : no
Meaning no.1 : argument SRs : phy 2 Number : pl
Gender : mas Lead

spectromètres Syntactic cats : no
Meaning no.1 : argument SRs : phy 2 Number : pl
Gender : mas Lead

spectrophotometrique Syntactic cats : ad Number : si Gender : mas Lead

spectroscopie Syntactic cats : no
Meaning no.1: predicate agent : bio 2 ani 2 hum 2 pot 2 uni 1 patient : phy 2 pot 1 uni 1 instrument : pre 2
Number : si Gender : fem Lead

spectroscopie de l'infrarouge Syntactic cats : no
Meaning no.1: predicate agent : bio 2 ani 2 hum 2 pot 2 uni 1 patient : phy 2 pot 1 uni 1 instrument : pre 2
Number : si Gender : fem Lead

sphérique Syntactic cats : ad Number : si
Gender : mas Lead

stock Syntactic cats : no
Meaning no.1 : argument SRs : phy 2 pot 1 Number : si Gender : mas Lead

Stonehenge Syntactic cats : np
Meaning no.1 : argument SRs : phy 2 pla 2 uni 2 No. & gender : invariable Lead

structure Syntactic cats : no
Meaning no.1 : argument SRs : phy 1 abs 1 Number : si Gender : fem Lead

sud Syntactic cats : no ad
Meaning no.1 : argument SRs : pla 2 Number : si
Gender : mas Lead No. & gender : invariable
Lead

sujets Syntactic cats : no
Meaning no.1 : argument SRs : abs 2 Number : pl
Gender : mas Lead

sumérien Syntactic cats : ad Number : si
Gender : mas Lead

supernovae Syntactic cats : no
Meaning no.1 : argument SRs : phy 2 pla 2 Number :
pl Gender : fem Lead

sur Syntactic cats : pr Number : si Gender
: mas Non-lead

surface Syntactic cats : no
Meaning no.1 : argument SRs : phy 2 Number : si
Gender : fem Lead

système Syntactic cats : no
Meaning no.1 : argument SRs : bio 1 ani 1 hum 1 phy 1
abs 1 pot 1 Number : si Gender : mas Lead

systèmes de commande Syntactic cats : no
Meaning no.1 : argument SRs : phy 1 abs 1 pot 1
Number : pl Gender : mas Lead

systèmes de propulsion Syntactic cats : no
Meaning no.1 : argument SRs : phy 1 abs 1 pot 1
Number : pl Gender : mas Lead

tables Syntactic cats : no
Meaning no.1 : argument SRs : phy 1 abs 1 Number :
pl Gender : fem Non-lead

taches Syntactic cats : no
Meaning no.1 : argument SRs : phy 2 pot 2 Number :
pl Gender : fem Lead

tangentiel Syntactic cats : ad Number : si
Gender : mas Lead

technique Syntactic cats : ad no Number : si
Gender : mas Lead
Meaning no.1 : argument SRs : abs 2 pot 1 Number :
si Gender : fem Lead

techniques Syntactic cats : no
Meaning no.1 : argument SRs : abs 2 pot 1 Number :
pl Gender : fem Lead

tectites Syntactic cats : no
Meaning no.1 : argument SRs : phy 2 Number : pl
Gender : fem Lead

télédétection Syntactic cats : no

* * * continued * * *

* * * continuation * * *
Meaning no.1: predicate experiencer : bio 2 ani 2 hum 2 pot 2 uni 1 patient : phy 2 pla 1 pot 1 uni 1 instrument : phy 2 pot 1 uni 1 Number : si Gender : fem Lead

télescope Hale de 508 cm Syntactic cats : nn
Meaning no.1 : argument SRs : phy 2 uni 2 Number : si Gender : mas Lead

télescopes Syntactic cats : no
Meaning no.1 : argument SRs : phy 2 pot 2 Number : pl Gender : mas Lead

témoin Syntactic cats : ad Number : si
Gender : mas Lead

température Syntactic cats : no
Meaning no.1 : argument SRs : abs 2 Number : si
Gender : fem Lead

temps des éphémérides Syntactic cats : no
Meaning no.1 : argument SRs : abs 2 No. & gender : invariable Lead

terre Syntactic cats : no np
Meaning no.1 : argument SRs : pla 2 Number : si
Gender : fem Lead
Meaning no.1 : argument SRs : phy 2 pla 2 uni 2
Number : si Gender : fem Lead

terrestre Syntactic cats : ad Number : si
Gender : mas Lead

textes Syntactic cats : no
Meaning no.1 : argument SRs : abs 2 Number : pl
Gender : mas Non-lead

textes en français Syntactic cats : no
Meaning no.1 : argument SRs : abs 2 Number : pl
Gender : mas Lead

textes en gallois Syntactic cats : no
Meaning no.1 : argument SRs : abs 2 Number : pl
Gender : mas Lead

textes en irlandais Syntactic cats : no
Meaning no.1 : argument SRs : abs 2 Number : pl
Gender : mas Lead

textes en polandais Syntactic cats : no
Meaning no.1 : argument SRs : abs 2 Number : pl
Gender : mas Non-lead

théorie Syntactic cats : no
Meaning no.1 : argument SRs : abs 2 Number : si
Gender : fem Lead

théorie de relativité générale Syntactic cats : nn
Meaning no.1 : argument SRs : abs 2 uni 2 Number :
si Gender : fem Lead

théories Syntactic cats : no
Meaning no.1: predicate agent : bio 2 ani 2 hum 2 pot 2
uni 1 Preps : de patient : bio 1 ani 1 hum 1 phy 1
abs 1 pla 1 pot 1 uni 1 pre 1 Preps : en Number : pl
Gender : fem Non-lead

théorique Syntactic cats : ad Number : si
Gender : mas Lead

Theory of the moon's motion Syntactic cats : nn
Meaning no.1 : argument SRs : abs 2 uni 2 No. &
gender : invariable Lead

thermique Syntactic cats : ad Number : si
Gender : mas Lead

trajectoires Syntactic cats : no
Meaning no.1 : argument SRs : abs 2 Number : pl
Gender : fem Lead

trous Syntactic cats : no
Meaning no.1 : argument SRs : phy 2 pla 2 pot 1
Number : pl Gender : mas Lead

turbulence Syntactic cats : no
Meaning no.1 : argument SRs : phy 2 pot 1 Number :
si Gender : fem Lead

ultraviolet Syntactic cats : ad Number : si
Gender : mas Vowel start Lead

univers Syntactic cats : no
Meaning no.1 : argument SRs : phy 2 pla 2 uni 2 No.
& gender : invariable Vowel start Lead

universitiés Syntactic cats : no
Meaning no.1 : argument SRs : pla 2 pot 1 Number :
pl Gender : fem Vowel start Lead

University of Cambridge. Institute of Astronomy
Syntactic cats : nn
Meaning no.1 : argument SRs : pla 2 No. & gender :
invariable Vowel start Lead

URSS Syntactic cats : np
Meaning no.1 : argument SRs : pla 2 uni 2 Number : si Gender : fem Vowel start Lead

utilisation Syntactic cats : no
Meaning no.1: predicate agent : bio 2 ani 2 hum 2 pot 2 uni 1 Preps : par patient : bio 1 ani 1 hum 1 phy 1 abs 1 pla 1 pot 1 uni 1 pre 1 Preps : de beneficiary : bio 1 ani 1 uni 1 pre 1 Preps : pour Number : si Gender : fem Vowel start Non-lead

variable Syntactic cats : no ad
Meaning no.1 : argument SRs : phy 1 abs 1 pot 1 Number : si Gender : fem Lead Number : si Gender : mas Lead

variation Syntactic cats : no
Meaning no.1: predicate experiencer : bio 1 ani 1 hum 1 phy 1 pot 1 uni 1 pre 1 Number : si Gender : fem Lead

véhicules Syntactic cats : no
Meaning no.1 : argument SRs : phy 2 pot 2 Number : pl Gender : mas Lead

véhicules Syntactic cats : no
Meaning no.1 : argument SRs : phy 2 pot 2 Number : pl Gender : mas Lead

Velikovsky, Immanuel Syntactic cats : nn
Meaning no.1 : argument SRs : bio 2 ani 2 hum 2 pot 2 uni 2 Number : si Gender : mas Lead

vélocité Syntactic cats : no
Meaning no.1 : argument SRs : abs 2 Number : si Gender : fem Lead

Vénus Syntactic cats : np
Meaning no.1 : argument SRs : phy 2 pla 2 pot 2 uni 2 Number : si Gender : fem Lead

vers Syntactic cats : pr No. & gender : invariable Non-lead

vidicons Syntactic cats : no
Meaning no.1 : argument SRs : phy 2 pot 2 Number : pl Gender : mas Lead

Viking-1 & 2 Syntactic cats : nn
Meaning no.1 : argument SRs : phy 2 pot 2 uni 2 No. & gender : invariable Lead

visible Syntactic cats : ve
Meaning no.1: predicate experiencer : bio 2 ani 2 hum 1 pot 1 uni 1 patient : bio 1 ani 1 hum 1 phy 1 pla 1 pot 1 uni 1 from loc. : phy 1 pla 1 pot 1 uni 1 Preps : à Number : si Gender : mas Non-lead

visiteurs Syntactic cats : no
Meaning no.1 : argument SRs : bio 2 ani 2 hum 2 pot 2
Number : pl Gender : mas Lead

Voie Lactée Syntactic cats : np
Meaning no.1 : argument SRs : phy 2 pla 2 uni 2
Number : si Gender : fem Lead

Voile X Syntactic cats : np
Meaning no.1 : argument SRs : phy 2 pla 2 uni 2
Number : si Gender : fem Lead

vol Syntactic cats : no
Meaning no.1: predicate agent : bio 1 ani 1 hum 1 phy 1 pot 2 uni 1 Preps : par to loc. : phy 2 pla 2 pot 1 uni 1 Preps : à Number : si Gender : mas
Lead

Voyager-1 Syntactic cats : nn
Meaning no.1 : argument SRs : phy 2 pot 2 uni 2 No. & gender : invariable Lead

Voyager-2 Syntactic cats : nn
Meaning no.1 : argument SRs : phy 2 pot 2 uni 2 No. & gender : invariable Non-lead

Wiltshire Syntactic cats : np
Meaning no.1 : argument SRs : pla 2 uni 2 No. & gender : invariable Lead
End of data

APPENDIX F

FRENCH STRINGS PRODUCED BY THE MT SYSTEM

	Page
Strings listed individually	147
Rejected strings	171
Strings manipulated as an index	174

1
$z2103astronomie d'amateur

2
$z2103astronomie

3
$z2103astronomie$z6003premier oeuvres$z6003textes latins & anglais en parallèle

4
$z2103astronomie$z6003pour les enfants

5
$z2103astronomie$z6003pour les écoles

6
$z2103astronomie$z6003poèmes$z6003premier oeuvres$z6003textes latins & anglais en parallèle

7
$z2103astronomie$z2002$z3103projets

8
$z2103astronomie$z6003textes en gallois

9
$z1103désastres cosmiques

10
$z1103espace intersidéral

11
$z1103espace intersidéral$z6003pour les enfants$z6003textes en irlandais

12
$z2103astronomie$z6003tables

13
$z2103astronomie$z6003données techniques

14
$z0003Grande-Bretagne$z2103astronomie$z6003guides des carrières

15
$z2103astronomie$z6103pour l'astrologie

16
$z2103astronomie$z6003encyclopédies

17
$z2103astronomie d'amateur$z6003périodiques

18
$z2103astronomie$z6003pour les enfants$z6003périodiques

19
$z2103astronomie$z6003périodiques

20
$z0101Cambridgeshire$zp103Cambridge$zl003universitiés$zl032
$zq103University of Cambridge. Institute of Astronomy$z6003
périodiques

21
$z2103astronomie$z6003questions & solutions

22
$z2103astronomie$z6003enseignement programmé

23
$z2103astronomie$z6003premier oeuvres

24
$z2103astronomie$dca av. J.-C.600-ca ap. J.-C.1750

25
$z2103astronomie$djusqu'à 1974

26
$z2103astronomie$djusqu'à 1976

27
$z2103astronomie$djusqu'à 1979

28
$z2103astronomie ancienne

29
$z2103astronomie$dca av. J.-C.2000-ap. J.-C.1543

30
$z2103astronomie$zs003influence$vde l'$wsur l'$dl300-1500$z3103
astrologie

31
$z2103astronomie$dca 1540-1978

32
$z2103astronomie$dl900-1975

33
$z2103astronomie$dca 1950-1973

34
$z2103astronomie$dca 1950-1975

35
$z2103astronomie$dl968-1969

36
$z2103astronomie$dca 1500-ca 1720$z6003biographies

37
$z2103astronomie$z2002$z3103Herschel, Sir John, 1st bart$z6003 biographies

38
$z0103Pays-Bas$z2103astronomie$z2002$z3103Oort, Jan Hendrik$z6003 livre d'or

39
$z0103monde antique$z2103astronomie

40
$z0103monde antique$z2103astronomie$z6003comptes-rendus

41
$z0003Europe$z2103astronomie$d1400-1650$z6003comptes-rendus

42
$z0103Chine$z2103astronomie$z6003périodiques

43
$z0103Japon$z2103astronomie$d600-1854$z2002$z3103aspects culturels

44
$z0103Afrique-du-sud$z2103astronomie$djusqu'à 1976

47
$z2103astronomie$z3003théories$z6003premier oeuvres

48
$z1103espace intersidéral$z3003théories$djusqu'à 1970

49
$z2103astronomie$z3003théories$dca 1500-1679

50
$z2103astronomie$zs003théoriesvdewen$z3103Copernic, Nicolas

51
$z2103astronomie$zs003théoriesvdewen$z3103Copernic, Nicolas $z6003comptes-rendus

52
$z2103astronomie$zs003théoriesvdewen$z3103Copernic, Nicolas $z6003textes en polandais

53
$z2103mécanique céleste$zs003théoriesvdewen$z3103Galilei, Galileo

54
$z1103corps astronomiques$z2103orbites

55
$z1103corps astronomiques$zp103orbites$z2103calcul

56
$zl103planètes$zpl03orbites$z2l03calcul$olois de képler$z2032
calcul des orbites des planètes par les lois de képler$zs003
applications$vdes$wau$z3l03ordinateurs digitaux

57
$zl103système solaire$zpl03origines

58
$zl103système solaire$zpl03origines$z6003comptes-rendus

59
$zl103système solaire$zl103planètes$z2l03interactions
gravitationnels à la court distance$vavec les$wavec les$zl103
corps astronomiques

60
$zl103système solaire$zpl03planètes$z2l03mouvement$z3003théories
$z6003premier oeuvres

61
$zl103système solaire$zpl03planètes$zpl03origines

62
$zl103système solaire$zpl03planètes$z2l03mouvement rétrograde

63
$zl103système solaire$zpl03planètes$z2l03vélocité tangentielle
$z3003théories

64
$zl103système solaire$z3003théories

65
$zl103système solaire$z3003théorieswduzs003influence$vde l'$w
sur les$djusqu'à 1978$z3l03exploration interplanétaire

66
$zl103système solaire$zs003théoriesvd'wdu$zpl03Hoerbiger, Hans

67
$zl103planètes$zpl03origines$z3003théories$djusqu'à 1977

68
$zl103Vénus$zpl03origineswenzs003théoriesvdewen$z3l03
Velikovsky, Immanuel$z6003études critiques

69
$zl103Vénus$zpl03origines$zs003théories de$z3l03Velikovsky,
Immanuel$z2042théories en Velikovsky, Immanuel en origines en
Vénus$z2l03critique$dl950-1977

70
$zl103lune$z2l03mouvement$z3003théories$z6003premier oeuvres
$z6003facsimilés

71
$zl103lune$zpl03origine$z3003théories

72
$z2103astronomie$z6003manuels

73
$z1103corps astronomiques$z2103observation$z6003manuels pour les amateurs

74
$z1103corps astronomiques$z2103observations$djusqu'à 1604$z2003 applications

75
$z2103astronomie$z6003manuels pour les amateurs

76
$z2103astronomie à l'oeil nue$z6003manuels pour les amateurs

77
$z2103astronomie$zp103calculs$wpour l'$zs003utilisation$vdes$w pour les$z3103calculateurs électroniques de poche

80
$z1103observatoires astronomiques

81
$z0003États-Unis$z1103observatoires astronomiques$z6003guides pour les visiteurs

81
$z0003États-Unis$z1103observatoires astronomiques$z6003guides pour les visiteurs

82
$z0103Édimbourg$z1103observatoires astronomiques$z1022$zq103Royal Observatory, Edimbourgh$djusqu'à 1972$z6003comptes-rendus

83
$z0103Édimbourg$z1103observatoires astronomiques$z1022$zq103Royal Observatory, Edimbourgh$z6003périodiques

84
$z0101Londres$zp103Greenwich (borough de Londres)$z1103 observatoires astronomiques$z1032$zq103Royal Greenwich Observatory$d1676

85
$z0101Londres$zp103Greenwich (borough de Londres)$z1103 observatoires astronomiques$z1032$zq103Royal Greenwich Observatory$djusqu'à 1946

86
$z0103East Sussex$zp103Herstmonceaux$z1103observatoires astronomiques$z1032$zq103Royal Greenwich Observatory

87
$z0103East Sussex$zp103Herstmonceaux$z1103observatoires astronomiques$z1032$zq103Royal Greenwich Observatory$z6003 périodiques

88
$z0103East Sussex$zp103Herstmonceaux$z1103observatoires astronomiques$z1032$zq103Royal Greenwich Observatory$djusqu'à 1975

89
$z1103télescopes optiques astronomiques

90
$z1103télescopes optiques astronomiques$z6003manuels pour les amateurs

92
$z1103télescopes optiques astronomiques$z2003utilisation$z6003 manuels pour les amateurs

93
$z1103télescopes astronomiques$z6003pour les enfants

94
$z1103télescopes astronomiques$djusqu'à 1953

95
$z1103télescopes astronomiques$djusqu'à 1975

96
$z0103Édimbourg$z1103radiotélescopes$z3003organisation$z1032 $zq103Royal Observatory, Edimbourgh. U.K. Infrared Telescope Unit $z6003périodiques

97
$z0103Californie$zp103Mont-Palomar$z1103télescopes astronomiques $z1032Mont-Palomar$zq103télescope Hale de 508 cm

98
$z1103astrolabes$djusqu'à ca 1930

99
$z1103cadrans équinoxiaux islamiques$dca 1550-1884

100
$z1103astrolabes planisphères

101
$z1103corps astronomiques$z2103observation à partir de véhicules spatiaux

102
$z1103corps astronomiques$z2103observation à partir de véhicules spatiaux$z2002$z3103instrumentation$z6003comptes-rendus

103
$z2103astronomie du rayonnement gamma$z6003comptes-rendus

104
$z0003Grande-Bretagne$z2103astronomie du rayonnement gamma

105
$z0003Grande-Bretagne$z2103astronomie du rayonnement x

106
$z1103spectromètres astronomiques

107
$z2103astronomie$zs003utilisation$vdes$wpour l'$djusqu'à 1973
$z3103intérferomètres d'intensité

108
$z2103radioastronomie

109
$z2103radioastronomie$djusqu'à 1974

110
$z2103radioastronomie$djusqu'à 1977

111
$z0003Grande-Bretagne$z2103radioastronomie

112
$z0003Grande-Bretagne$z2103radioastronomie$djusqu'à 1975

113
$z2103astronomie du rayonnement x

114
$z2103astronomie du rayonnement x$z6003comptes-rendus

115
$z2103astronomie sphériquee

116
$x2103astronomie$y2003implications de la réfraction du
rayonnement électromagnétique$x1103rayonnement électromagnétique
$y2103réfraction$y2003implications pour l'astronomie

117
$z2103corps astronomiques

118
$z1103corps astronomiques$z6003pour les enfants

119
$z1103corps astronomiques$z6003pour les écoles

120
$z1103corps astronomiques$z6003manuels pour l'identification

121
$z1003corps astronomiques$zq103singularités

122
$z1103cachots

123
$zl103cachots$z6003comptes-rendus

124
$zl103cachots$z6003pour les enfants

125
$zl103cachots$z2003théories$wdes$zs003applicationsvdewdans les
$z3002$wphysique$zp103théorie de relativité générale

126
$zl103masers célestes

127
$z2103astronomie descriptive$z5003régions étudiés$zq103univers
visible depuis l'hémisphère sud

128
$z2103astronomie extragalactique

129
$zl103espace intersidéral$z6003pour les enfants

130
$zl103pulsars

131
$zl103quasars$zp103noyaux$z6003comptes-rendus

132
$zl103trous blancs

133
$zl103corps astronomiques$z6003périodiques

134
$zl103données astronomiques$z6003périodiques

135
$zl103planétariums$djusqu'à 1977

136
$z2103astrophysique

137
$z2103astrophysique$zs003applications$vde la$wà l'$z2103physique
théorique

139
$z2103astrophysique$z6003livre d'or

140
$z2103astrophysique$zp103processus plasmiques

141
$x2103astrophysique$yp003recherche$y2003applications à la
recherche physique$x2103physique$yp003recherche$y2003applications
de la recherche astrophysique

142
$z2103physique cosmique$z6003périodiques

143
$z1103plasmas$z3103aspects astrophysiques

144
$z2103astrophysique relativiste

145
$z2103astrophysique relativiste$zs003utilisation$vdes$wpour l'
$z3103véhicules spatiaux$z6003comptes-rendus

146
$z2103astrophysique$zp003équipment & techniques

147
$z2103astrophysique$z6003périodiques

149
$z2103astrophysique$z2002$z3103Dyson, Freeman John$djusqu'à 1979
$z6003biographies

150
$z2103astronomie de l'infrarouge lontaine$z6003comptes-rendus

151
$z2103astronomie de l'infrarouge

152
$z2103astronomie de l'infrarouge$z6003comptes-rendus

153
$z2103astronomie de l'infrarouge$zp003recherche par les
institutions britanniques$z6003comptes-rendus

154
$z1103galaxies$zp103rayonnement$wdepuis les$zp103décalage vers le
rouge$z2003interprétation$z6003comptes-rendus

155
$z1103corps astronomiques$zp103champs magnétiques

156
$z1103théorie dynamo

157
$z1103corps astronomiques$zp103rayonnement

158
$z1103corps astronomiques$zp103rayonnement radioélectrique$zp103
lignes de recombinaison$z6003comptes-rendus

159
$z1103espace intersidéral$zp103rayonnement électromagnétique

160
$z2103astrophysique nucléaire

161
$z1103système solaire$zp103électrons$zp103charge$z2103variation

162
$z1103espace intersidéral$zp103rayons cosmiques$z2103composition

163
$z1103espace intersidéral$zp103rayons cosmiques$z2103variation

164
$z1103espace intersidéral$zp003rayonnement cosmique de la grand énergie

165
$z2103astrophysique de la grand énergie

166
$z2003astronomie$zp103cosmologie$z6003comptes-rendus

167
$z2103cosmographie$dca 1470-ca 1700

168
$z1103univers

169
$z1103univers$z6003pour les enfants

170
$z1103univers$z3003théories

171
$z1103univers$z3003théories$z6003premier oeuvres

172
$z1103univers$z2003théories$vdes$wen$z3103civilisations anciens

173
$z2003astronomie$zp103cosmologie$z2002$z3103aspects mathématiques

174
$z1103univers$z3103modèles mathématiques

175
$z1103univers$z6003illustrations

176
$z2003astronomie$zp103cosmologie$djusqu'à 1976

177
$z2003astronomie$zp103cosmologie$djusqu'à 1979

178
$z1103univers$z3003théories$dca av. J.-C.3000-ap. J.-C.1687

179
$z1103univers$djusqu'à 1977

180
$zl103univers$djusqu'à 1978

181
$zl103univers$zp003structure

182
$zl103espace interplanétaire$zp103plasmas$z2103observation$zp003
équipment & techniques

183
$zl103galaxies

184
$zl103galaxies$zp103noyaux actifs$z6003comptes-rendus

185
$zl103galaxies$z2103évolution

186
$zl103galaxies$zp103images$z2003mesure$z3003organisations$zl042
$zq103Cosmos Facility$z6003périodiques

187
$zl103galaxies$zp103propriétés physiques$z6003comptes-rendus

188
$zl103nuages moléculaires interstellaires$z6003comptes-rendus

189
$zl103espace interstellaire$zp103matière

190
$zl103espace interstellaire$zp103matière$zp003structure$v&$zg103
propriétés physiques$z6003comptes-rendus

191
$zl103espace interstellaire$zp103molécules$z6003comptes-rendus

192
$zl103Grand Nuage de Magellan$zp103sources du rayonnement alpha-h
$z6003cartes

193
$zl103nébuleuses$z2103observation$z6003manuels pour les amateurs

194
$zl103espace intersidéral$zp103poussières

195
$zl103espace intersidéral$zp103poussières$z6003comptes-rendus

196
$zl103radiogalaxies$zp103propriétés physiques

197
$zl103Petit Nuage de Magellan$z6103atlas

198
$z1103Galaxie$z2103simulation$wde la$zs003utilisation$vdes$wpour la$z3103monuments$dca av. J.-C.2500

199
$z1103Voie Lactée

200
$z1103corps astronomiques$z2103observation$wdes$zs003utilisation $vdes$wpour l'$z3103télescopes astronomiques$z5003sujets étudiés $zq103Crab Nebula

201
$z1103Crab Nebula

202
$z1103nébuleuses$z2103observation$dca 100-ca 1800

203
$z2103cosmogonie

204
$z2103cosmogonie$zp103théorie de relativité générale

205
$z1103univers$zp103limites

206
$z2103cosmogonie$djusqu'à 1975$z6003textes en polandais

207
$z1103galaxies$zp103rayonnement$wdepuis les$zp103décalage vers le rouge$z2003interprétation

208
$z1103système solaire

209
$z1103système solaire$z6003pour les enfants

210
$z1103système solaire$z6003pour les écoles

211
$z1103système solaire$z2003mesure

212
$z1103système solaire$zp103plasmas

214
$z1103système solaire$z6003périodiques

215
$z1103système solaire$z3003organisations de recherche$z1022 $zq103Science Research Council (Grande-Bretagne). Solar System Committee$z6003périodiques

216
$zl103système solaire$z6003questions & solutions

217
$zl103lune

218
$zl103lune$z6003comptes-rendus

219
$zl103lune$z6003pour les enfants

220
$zl103lune$z3103observations$djusqu'à 1978

221
$zl103lune$zp103surface

222
$zl003lune$zp103surface$z2103observation$z6003manuels pour les amateurs

223
$zl103lune$zp103surface$z6103photographies prises depuis les véhicules spatiaux

224
$zl103lune$z2103mouvement$z2002$z3103Newton, Sir Isaac$zp103 Theory of the moon's motion$z6003études critiques

226
$zl103planètes$zp103atmosphère

227
$zl103planètes$z2103dynamique

229
$zl103planètes$z2103orbites

230
$zl103système solaire$zl103planètes géants$zp103constituants chimiques$z6003comptes-rendus

231
$zl103système solaire$zp103planètes

232
$zl103système solaire$zp103planètes$z6003comptes-rendus

233
$zl103système solaire$zp103planètes$zp103polarité

234
$zl103système solaire$zp103planètes$zp003structure$v&$zg103 propriétés physiques

235
$zl103système solaire$zp103planètes terrestres

236
$zl103système solaire$zpl03planètes$z3103observations$zl032 observations des planètes du système solaire$zs003effets$vdes$w sur les$dca av. J.-C.2000-ap. J.-C.1019$z3103temps des éphémérides

237
$zl003planètes$zql03Mercure$z6003premier oeuvres

238
$zl003planètes$zql03Mercure$zpl03surface

239
$zl003planètes$zql03Mercure$zpl03surface$z6103photographies prises depuis Mariner-10

240
$zl103Vénus$zpl03surface

241
$zl103Vénus$zpl03surface$z6103photographies prises depuis les véhicules spatiaux

242
$zl103Mars$zpl03données astronomiques$zt003$vrelatées aux$w relatée aux$z3003dimensions de Grande pyramide

243
$zl103Mars$zpl03surface

244
$zl103Mars$zpl03surface$z6003pour les enfants

245
$zl103Mars$zpl03surface$z2103observation$djusqu'à 1977

246
$zl103Mars$zpl03surface$z2103observation$djusqu'à 1980

247
$zl103Mars$zpl03surface$z2103observation$djusqu'à ca 1930

249
$zl103Mars$zpl03surface$z6103photographies prises depuis Viking-1 & 2

250
$zl103Mars$zl103surface$z2103télédétection$z2032télédétection de la surface du Mars$z3103Mariner-9$zpl03vidicons

251
$zl103Jupiter$zpl03satellites$zpl03orbites

252
$zl103Jupiter$zpl03surface$z6103photographies prises depuis les véhicules spatiaux

253
$z1103Saturne$zp103surface$z6103photographies prises depuis les véhicules spatiaux

254
$z1103Saturne$z2103observation$djusqu'à 1960

255
$z1103Neptune$z2003découverte

256
$z1103Pluton$z2003découverte$z6003observations personnels

257
$z0103hémisphère nord$z1103système solaire$zp103planètes $z6003cartes

258
$z1103météores$djusqu'à 1969

259
$z1103météorites ferreux

260
$z1103météorites

263
$z0101Londres$zp103Kensington and Chelsea (borough de Londres) $z1103musées$z1032$zq103British Museum (Natural History)$zp003 stock$zq103météorites$z6003catalogues

264
$z1103comètes

265
$z1103comètes$djusqu'à 1969

266
$z1103soleil

267
$z1103soleil$z2103évolution

268
$z1103soleil$z6003pour les enfants

269
$z1103soleil$z6003pour les écoles$z6003textes en gallois

270
$z1103soleil$zp103cycle de vie

271
$z2103radioastronomie solaire$djusqu'à 1978

272
$z1103soleil$zp103orages de bruit

273
$zl103taches solaires

274
$zl103soleil$zp103chromosphère

275
$zl103soleil$zp103chromosphère$z2003perturbations

276
$zl103soleil$z2103éclipses$z4103points de vue anthroposophiques

278
$zl103étoiles obs$z2103distribution$wdes$z2003détermination$wde la$zs003applications$vde la$wà la$z3103photométrie

279
$zl103étoiles

280
$zl103étoiles$zp103atmosphères$z2103observation$zp003équipment & techniques

281
$zl103étoiles$z2103évolution

282
$zl103étoiles$z6003pour les enfants

283
$zl103étoiles$z2003formation

284
$zl103étoiles$zp003intérieurs

286
$xl003étoiles$yq001naines blancs & étoiles de neutrons$xl103 étoiles de neutrons$zp003structure$zp003structure

287
$zl103Grande Ourse

289
$zl103étoiles$zp103magnitude photovisuelle$z6103atlas

290
$zl103étoiles en rotation$z3003théories$dl611-1976

291
$zl103étoiles$z2103mouvement propre

292
$zp003étoiles dans la région de l'équateur galactique à la longitude 140'$z2103mouvement propre

293
$zl103étoiles binairese

294
$z1103Procyon$zp103spectres$z6003illustrations

295
$z1103étoiles variablese nebulairese

296
$z1103étoiles variablese$z2103observation$z6003manuels pour les amateurs

297
$z1103étoiles pulsantse

298
$z1103étoiles binaires s'éclipsant$zp103lumière$z2103variation

299
$z1003étoiles$zq103Algol

300
$z1103étoiles variables à flare

301
$z1103étoiles de neutrons$z6003comptes-rendus

302
$z1103étoiles de neutrons$zp003structure & propriétés

304
$z1103supernovae

305
$z1103Voile X$z2103observation$vpar les$wde la$z3103astronomes sumériens

306
$z1103amas d'étoiles$z2103mouvement propre

307
$z1103amas globulaires$z6003comptes-rendus

308
$z1103étoiles froidse$z2103spectroscopie de l'infrarouge proche

309
$z1103étoiles$zp103spectres$zp103énergie$z2103distribution $z6103pour les observations spectrophotometriques

310
$z1103étoiles$z2103spectroscopie ultraviolette$zp103spectres $zp103énergie$z2103distribution$z6003tables

311
$z1103étoiles$z2103identification$z6003tables

313
$z1103constellations

314
$z1103constellations$z6003cartes

315
$z1103constellations$z6003pour les enfants

316
$z0103hémisphère nord$z1103constellations$z6003cartes

317
$z1103étoiles$z6103atlas

318
$z1103étoiles$z6103atlas$z6103pour la navigation céleste

319
$z1103satellites$z2103mouvement$z6003comptes-rendus

320
$z1103terre$zp103surface$z3103photographies prises à partir de satellites artificiels

321
$z1103terre$zp103surface$z6103photographies prises depuis les véhicules spatiaux

322
$z1003planètes$zq103terre

323
$z1003planètes$zq103terre$z6003pour les enfants

324
$z1103terre$zp103densité

326
$z1103terre$z2003rotation & orbite

328
$z1103terre$z2103rotation$z6003comptes-rendus

329
$z1103terre$z2103rotation$zp103variation

330
$z1103terre$z2103rotation$z6103pour la geophysique

331
$z2103astronautique

332
$z2103astronautique$z6003comptes-rendus

333
$z2103astronautique$z6003pour les enfants

334
$z2103astronautique$z6003pour les écoles

335
$z2103astronautique$z6003textes en polandais

338
$z2103astronautique$z6003encyclopédies

339
$z2103astronautique$z6003encyclopédies$z6003pour les enfants

340
$z2103astronautique$z6003périodiques

341
$z2103astronautique$djusqu'à 1964

342
$z2103astronautique$djusqu'à 1975

343
$z2103astronautique$djusqu'à 1977$z6003pour les écoles

344
$z2103astronautique$z2002$z3103Aldrin, Edwin Eugene$z6003
biographies

345
$z2103astronautique$z2002$z3103Collins, Michael, b.1930$z6003
biographies

346
$z2103astronautique$z2002$z3103Collins, Michael, b.1930$z6003
biographies$z6003pour les enfants

347
$z2103astronautique$z2002$z3103Irwin, James Benson$z6003
biographies

348
$z2103astronautique$z2002$z3103Irwin, James Benson$d1971-1978
$z6003biographies

349
$z0103URSS$z2103astronautique$djusqu'à 1972

350
$x0003États-Unis$y2103astronautique$ys103politique$vdu$wsur l'$d
jusqu'à 1975$y3103gouvernement$x1103États-Unis$yp003gouvernement
$yp003politique sur l'astronautique$djusqu'à 1975

351
$z2103vol spatial interstellaire$z2002$z3103études de
faisabilité$z1032$zq103projet Daedalus

352
$z1103espace intersidéral$z2103exploration$wde l'$zs003
utilisation$vdes$wpour l'$z3103machines$z6003pour les enfants

353
$z2103vol spatial

354
$x2103vol spatial$y2003applications de la légèreté humaine
$x1103homme$y2103légèreté$y2003applications au vol spatial

355
$z2103vol spatial$z6003pour les enfants

356
$z2103vol spatial$z6003prévisions

357
$z2103véhicules spatiaux$z2003contrôle

358
$z0003Grande-Bretagne$z1103écoles secondaires$zp003matières
d'enseignement$zq103vol spatial$z6103pour l'enseignement

359
$z2103vol spatial$djusqu'à 1977

360
$z2103vol spatial$djusqu'à 1978

361
$z2103vol spatial$djusqu'à 1975$z6003pour les enfants

362
$z2103vol spatial$djusqu'à 1977$z6003pour les enfants

363
$z2103vol spatial soviétique$djusqu'à 1978

364
$z2103vol spatial$z2103dynamique

365
$z2103vol spatial$zp103trajectoires$z2103optimisation

367
$z2103vol spatial des véhicules automatiques$djusqu'à 1973

368
$z1103lune$z2103vol spatial$djusqu'à 1967

369
$z1003planètes$zq103Mercure$z2103vol spatial$z2002$z3103
Mariner-10

370
$z1103Vénus$z2103vol spatial$z2002$z3103Mariner-10

371
$z1103Mars$z2103vol spatial des véhicules automatiques$z3103
programme Viking

372
$z1103navettes spatiaux

373
$z1103navettes spatiaux$z6003pour les enfants

374
$z1103espace intersidéral$z2103vol spatial des véhicules habités $z2002$z3103Skylab

375
$z1103espace intersidéral$z2103vol spatial des véhicules habités $z2002$z3103Skylab$d1973-1974

376
$z2103vol spatial interstellaire des véhicules habités

377
$z2103vol spatial des véhicules habités

378
$z2103vol spatial des véhicules habités$z2002$z3103projet Apollo-Soyouz

379
$z1103lune$z2103vol spatial des véhicules habités$z2002$z3103 Apollo-14

380
$z2103vol spatial des véhicules habités$z6003illustrations

381
$z2103vol spatial des véhicules habités$djusqu'à 1980

382
$z2103vol spatial des véhicules habités$djusqu'à 1970

383
$z2103vol spatial des véhicules habités$djusqu'à 1974

384
$z2103vol spatial des véhicules habités$djusqu'à 1975$z6003pour les enfants

385
$z2103vol spatial des véhicules habités$djusqu'à 1976

386
$z2103vol spatial des véhicules habités$djusqu'à 1978

387
$z1103astronautes américains$djusqu'à 1975

388
$z1103astronautes soviétiques$djusqu'à 1977$z6003biographies

389
$z1103lune$z2103vol spatial des véhicules habités$z2002$z3103
Apollo-11

390
$z1103lune$z2103vol spatial des véhicules habités$z2002$z3103
Apollo-12

391
$z1103lune$z2103vol spatial des véhicules habités$z2002$z3103
Apollo-13

392
$z1103lune$z2103vol spatial des véhicules habités$z2002$z3103
Apollo-15

393
$z1103lune$z2103vol spatial des véhicules habités$z2002$z3103
Apollo-16

394
$z1103lune$z2103vol spatial des véhicules habités$z2002$z3103
Apollo-17

396
$z1103lune$z2103vol spatial des véhicules habités$z6003pour les
enfants

397
$z2103vol spatial des véhicules habités$z3103Apollo$z2103jonction
$vavec$wavec$d1975$z3103Soyouz-19

398
$z1103satellites artificiels

399
$z1103satellites artificiels$z6003pour les enfants

400
$z1103satellites artificiels$z2103observation$z6003manuels pour
les amateurs

401
$z1103satellites artificiels$z6003tables

402
$z1103satellites artificiels russes$djusqu'à 1970

403
$z1103véhicules spatiaux$z6003comptes-rendus

404
$z1103véhicules spatiaux$zp103propriétés thermiques$z6003comptes-
rendus

405
$z1103véhicules spatiaux$z6003données techniques

406
$z1103véhicules spatiaux$z6003illustrations$z6003pour les enfants

407
$z1103véhicules spatiaux$zp103température$z2003contrôle$z2032 contrôle thermique des véhicules spatiaux$zs003applications$vdes wauz3103échanges thermiques$z6003comptes-rendus

408
$z1103véhicules spatiaux$djusqu'à 1975$z6003pour les enfants

409
$z1103véhicules spatiaux$djusqu'à 1975$z6003pour les écoles

410
$z1103véhicules spatiaux$djusqu'à 1978

411
$z1103véhicules spatiaux$djusqu'à 1979$z6003pour les enfants

412
$z1103véhicules spatiaux$z6003prévisions

413
$z1103satellites artificiels$z2103dynamique$z6003textes en français

414
$z2103véhicules spatiaux$z2103contrôle automatique$z6003 comptes-rendus

415
$z1003véhicules aérospatiaux$zq103fusées$z2103propulsion

416
$z1003véhicules aérospatiaux$zq103fusées$djusqu'à 1974

417
$z1003véhicules aérospatiaux$zq103fusées$djusqu'à 1977

418
$z1103modèles de fusées$z2103aérodynamique

419
$z1003véhicules aérospatiaux$zq103fusées$z2003développement$d jusqu'à 1969

420
$z1103véhicules spatiaux$z3103systèmes de propulsion électriques $z6003comptes-rendus

421
$z1103véhicules spatiaux$zp103astronautes$z2103conditions de vie

422
$z2103vol spatial$z2002$z2103aspects économiques$djusqu'à 1972

423
$z1103systèmes de commande automatiques$z6003comptes-rendus

REJECTED STRINGS

These strings were either rejected by the translation system, or were manually rejected from the final output because they would not be processed by a PRECIS manipulation system. Those rejected by the system are given in their source language form.

45
$zpl03Amérique precolombienne$z2l03astronomie$z6003
comptes-rendus

46
$zpl03Mexique precolombien$z2l03astronomie$z6003comptes-rendus

78
$x0l03Avon$ypl03Bath$yll03museums$yl032$yql03Holburne of Menstrie
Museum$yp003exhibits$yq003items associated with astronomy$d
1460-1630$x2l03astronomy$dl460-1630$yp003items associated with
astronomy, 1460-1630 exhibited at Holburne of Menstrie Museum
$z6003catalogues

79
$z2l03astronomie$z2l03observations par$z2022observations
astronomiques$z3l03Ptolémée, Claude

91
$zll03télescopes optiques astronomiques$z2l03$vchoix & essai$w
choix$zg003$wessai$z6003manuels pour les amateurs

138
$x2l03astrophysique$ys003applications$vdes$y3003théories$ven
turbulence plasmique$wde la turbulence plasmique$xll03plasmas
$y2l03turbulence$y3003théories$ys003applications$và l'$y3003
astrophysique

148
$x2l03astrophysics$yp003research$y2003role of Spacelab Programme
$xll03outer space$y2l03research projectsvbyy2022space research
projects$y3l03European Space Agency$yl042$yql03Spacelab Programme
$y2003role in astrophysical research$z6003conference proceedings

213
$xll03solar system$y2l03simulation$y2003use of Stonehenge$x0l03
Wiltshire$ypl03Amesbury$yl003monuments$2lhenge$2lmegalithic$yl032
$yql03Stonehenge$y2003use in simulation of solar system

225
$xll03moon$ypl03eclipses$y2l03forecasting$y2003use of Stonehenge
$x0l03Wiltshire$ypl03Amesbury$yl003monuments$2lhenge$2lmegalithic
$yl032$yql03Stonehenge$y2003use in forecasting eclipses of the
moon

228
$zl003planets$zql00Mercury$zl022$zll00Venus$zgl00Jupiter$zr003
Mercury, Venus & Jupiter$z6l03photographs taken from artificial
satellites

248
$zll03Mars$zpl03surface$zr003photographies prisé depuis Mariner-6
& 7

261
$zll03$vmétéores & météorites$wmétéores$zgl03$wmétéorites
$z6003comptes-rendus

262
$zl103tectites$zp003structure$v&$zgl03$vpropriétés physique$w
propriétés physiques

277
$xl103sun$y2l03eclipses$y2l03forecasting$y2003use of Stonehenge
$x0l03Wiltshire$ypl03Amesbury$yl003monuments$2lhenge$2lmegalithic
$yl032$yql03Stonehenge$y2003use in forecasting eclipses of the
sun

285
$zl103$vétoiles & constellations$wétoiles$zgl03$wconstellations
$z2l03identification

288
$zl103étoiles$zpl03photosphères$z2l03$vobservation & analyse$w
observation$zg003$wanalyse

303
$zl103$vnovae & supernovae$wnovae$zgl03$wsupernovae$z2l03
observation$vpar les$wdes$djusqu'à 1976$z3l03astronomes
d'extrême-orient

312
$zl102land$z2l00surveying$z2022$zl103stars$z6003tables$z6003for
land surveying

325
$zl103terre$zpl03forme$v& dimensions$zgl03$wdimensions$z3003
théories$djusqu'à 1969$z6003pour les enfants

327
$xl103terre$y2l03nutation$y2003effets de l'élasticité du nife
$xl003terre$ypl03noyau$ypl03élasticité$y2003effets$vsur la
nutation de la terre$wde la nutation de la terre$z6003
comptes-rendus$z6003comptes-rendus

336
$z2003vol spatial interstellaire instantané$zs003utilisation$vde
les$wdans le$z3l03cachots &$vdes$zgl03étoiles ferreuse

337
$zl102secondary schools$z2l00teaching$zl022$z2l03astronautics
$z2l03mathematics$z6003for secondary school teaching

366
$zl103espace intersidéral$z2l03vol spatial des véhicules
automatiques$z2002$z3l03$vvoyager-1 & voyager-2$wvoyager-1$zgl03
$wvoyager-2$zpl03capsules témoins

395
$zl103moon$z2l03space flight$2lmanned$z2002$z3l03Apollo Project
$zt003compared with$z3003paintings of manned space flight by
Smith, Ralph A$dl945-1955

STRINGS MANIPULATED AS AN INDEX

This index was produced using the suite of programs written by Mr F. Smith of the Department of Library and Information Studies, Loughborough University of Technology.

Aérodynamique. Modèles de fusées 418
Afrique-du-sud
Astronomie, jusqu'à 1976 44
Aldrin, Edwin Eugene. Astronautique
- Biographies 344
Algol. Étoiles 299
Amas d'étoiles
Mouvement propre 306
Amas globulaires
- Comptes-rendus 307
Apollo
Vol spatial des véhicules habités. Jonction avec Soyouz-19, 1975 397
Apollo-11. Vol spatial des véhicules habités. Lune 389
Apollo-12. Vol spatial des véhicules habités. Lune 390
Apollo-13. Vol spatial des véhicules habités. Lune 391
Apollo-14. Vol spatial des véhicules habités. Lune 379
Apollo-15. Vol spatial des véhicules habités. Lune 392
Apollo-16. Vol spatial des véhicules habités. Lune 393
Apollo-17. Vol spatial des véhicules habités. Lune 394
Aspects astrophysiques. Plasmas 143
Aspects culturels. Astronomie, 600-1854. Japon 43
Aspects économiques. Vol spatial
Jusqu'à 1972 422
Aspects mathématiques. Cosmologie. Astronomie 173
Astrolabes
Jusqu'à ca 1930 98
Astrolabes planisphères 100
Astrologie
Influence sur l'astronomie, 1300-1500 30
Astronautes américains
Jusqu'à 1975 387
Astronautes soviétiques
Jusqu'à 1977 - Biographies 388
Astronautes. Véhicules spatiaux
Conditions de vie 421
Astronautique 331
- Comptes-rendus 332
- Encyclopédies 338
- Encyclopédies - Pour les enfants 339
- Périodiques 340
- Pour les écoles 334
- Pour les enfants 333
- Textes en polonais 335
Jusqu'à 1964 341
Jusqu'à 1975 342
Jusqu'à 1977 - Pour les écoles 343
Aldrin, Edwin Eugene - Biographies 344
Collins, Michael, b.1930 - Biographies 345
Collins, Michael, b.1930 - Biographies - Pour les enfants 346
Irwin, James Benson - Biographies 347
Irwin, James Benson, 1971-1978 - Biographies 348
Astronautique. États-Unis
Politique du gouvernement, jusqu'à 1975 350
Astronautique. URSS
Jusqu'à 1972 349
Astronomes sumériens
Observation de la Voile X 305
Astronomie 2
- Données techniques 13
- Encyclopédies 16
- Enseignement programmé 22
- Manuels 72
- Manuels pour les amateurs 75
- Périodiques 19
- Poèmes - Premier oeuvres - Textes latins & anglais en parallèle 6
- Pour l'astrologie 15
- Pour les écoles 5
- Pour les enfants 4
- Pour les enfants - Périodiques 18
- Premier oeuvres 23
- Premier oeuvres - Textes latins & anglais en parallèle 3
- Questions & solutions 21

Astronomie
- Tables 12
- Textes en gallois 8
1900-1975 32
1968-1969 35
Ca 1500-ca 1720 - Biographies 36
Ca 1540-1978 31
Ca 1950-1973 33
Ca 1950-1975 34
Ca av. J.-C.2000-ap. J.-C.1543 29
Ca av. J.-C.600-ca ap. J.-C.1750 24
Jusqu'à 1974 25
Jusqu'à 1976 26
Jusqu'à 1979 27
Calculs. Utilisation des calculateurs électroniques de poche 77
Herschel, Sir John, 1st bart - Biographies 37
Implications de la réfraction du rayonnement électromagnétique 116
Influence de l'astrologie, 1300-1500 30
Projets 7
Théories - Premier oeuvres 47
Théories, ca 1500-1679 49
Théories de Copernic, Nicolas 50
Théories de Copernic, Nicolas - Comptes-rendus 51
Théories de Copernic, Nicolas - Textes en polonais 52
Utilisation des intérferomètres d'intensité, jusqu'à 1973 107
Astronomie à l'oeil nue
- Manuels pour les amateurs 76
Astronomie. Afrique-du-sud
Jusqu'à 1976 44
Astronomie ancienne 28
Astronomie. Chine
- Périodiques 42
Astronomie d'amateur 1
- Périodiques 17
Astronomie de l'infrarouge 151
- Comptes-rendus 152
Recherche par les institutions britanniques
- Comptes-rendus 153
Astronomie de l'infrarouge lontaine
- Comptes-rendus 150
Astronomie descriptive
- Régions étudiés: Univers visible depuis l'hémisphère sud 127
Astronomie du rayonnement gamma
- Comptes-rendus 103
Astronomie du rayonnement gamma. Grande-Bretagne 104
Astronomie du rayonnement x 113
- Comptes-rendus 114
Astronomie du rayonnement x. Grande-Bretagne 105
Astronomie. Europe
1400-1650 - Comptes-rendus 41
Astronomie extragalactique 128
Astronomie. Grande-Bretagne
- Guides des carrières 14
Astronomie. Japon
600-1854. Aspects culturels 43
Astronomie. Monde antique 39
- Comptes-rendus 40
Astronomie. Pays-Bas
Oort, Jan Hendrik - Livre d'or 38
Astronomie sphériquee 115
Astrophysique 136
- Livre d'or 139
- Périodiques 147
Applications de la physique théorique 137
Dyson, Freeman John, jusqu'à 1979 - Biographies 149
Equipment & techniques 146
Processus plasmiques 140
Recherche. Applications à la recherche physique 141
Astrophysique de la grand énergie 165
Astrophysique nucléaire 160

Astrophysique relativiste 144
  Utilisation des véhicules spatiaux - Comptes-rendus 145
Atlas
  Étoiles 317
  Étoiles - Atlas - Pour la navigation céleste 318
  Étoiles. Magnitude photovisuelle 289
  Petit Nuage de Magellan 197
Atmosphère. Planètes 226
Atmosphères. Étoiles
  Observation. Équipment & techniques 280
British Museum (Natural History)
  Stock: Météorites - Catalogues 263
Cachots 122
  - Comptes-rendus 123
  - Pour les enfants 124
  Théories. Applications de théorie de relativité générale 125
Cadrans équinoxiaux islamiques
  Ca 1550-1884 99
Calcul (Lois de Képler). Orbites. Planètes
  Applications des ordinateurs digitaux 56
Calcul. Orbites. Corps astronomiques 55
Calculateurs électroniques de poche
  Utilisation pour les calculs pour l'astronomie 77
Calculs. Astronomie
  Utilisation des calculateurs électroniques de poche 77
Californie
  Mont-Palomar. Télescopes astronomiques: Télescope Hale de 508 cm 97
Cambridge
  Universitiés: University of Cambridge. Institute of Astronomy - Périodiques 20
Cambridgeshire
  Cambridge. Universitiés: University of Cambridge. Institute of Astronomy - Périodiques 20
Champs magnétiques. Corps astronomiques 155
Charge. Électrons. Système solaire
  Variation 161
Chine
  Astronomie - Périodiques 42
Chromosphère. Soleil 274
  Perturbations 275
Civilisations anciens
  Théories en univers 172
Collins, Michael, b.1930. Astronautique
  - Biographies 345
  - Biographies - Pour les enfants 346
Comètes 264
  Jusqu'à 1969 265
Composition. Rayons cosmiques. Espace intersidéral 162
Conditions de vie. Astronautes. Véhicules spatiaux 421
Constellations 313
  - Cartes 314
  - Pour les enfants 315
Constellations. Hémisphère nord
  - Cartes 316
Constituants chimiques. Planètes géants. Système solaire
  - Comptes-rendus 230
Contrôle automatique. Véhicules spatiaux
  - Comptes-rendus 414
Copernic, Nicolas
  Théories en astronomie 50
  Théories en astronomie - Comptes-rendus 51
  Théories en astronomie - Textes en polonais 52
Corps astronomiques 117
  - Manuels pour l'identification 120
  - Périodiques 133
  - Pour les écoles 119
  - Pour les enfants 118
  Champs magnétiques 155
  Observation - Manuels pour les amateurs 73
  Observation à partir de véhicules spatiaux 101
  Observation à partir de véhicules spatiaux. Instrumentation - Comptes-rendus 102

Corps astronomiques
Observation. Utilisation des télescopes astronomiques
- Sujets étudiés: Crab Nebula 200
Observations, jusqu'à 1604. Applications 74
Orbites 54
Orbites. Calcul 55
Rayonnement 157
Rayonnement radioélectrique. Lignes de recombinaison
- Comptes-rendus 158
Corps astronomiques. Système solaire
Interactions gravitationnels à la court distance avec les planètes 59
Cosmogonie 203
Jusqu'à 1975 - Textes en polonais 206
Théorie de relativité générale 204
Cosmographie
Ca 1470-ca 1700 167
Cosmologie. Astronomie
- Comptes-rendus 166
Jusqu'à 1976 176
Jusqu'à 1979 177
Aspects mathématiques 173
Cosmos Facility
- Périodiques 186
Crab Nebula 201
Crab Nebula. Sujets étudiés
Corps astronomiques. Observation. Utilisation des télescopes astronomiques 200
Cycle de vie. Soleil 270
Décalage vers le rouge. Rayonnement depuis les galaxies
Interprétation - Comptes-rendus 154
Interprétation 207
Densité. Terre 324
Désastres cosmiques 9
Distribution. Énergie. Spectres. Étoiles
- Pour les observations spectrophotométriques 309
Distribution. Énergie. Spectres. Spectroscopie ultraviolette. Étoiles
- Tables 310
Distribution. Étoiles ob
Détermination. Applications de la photométrie 278
Données astronomiques
- Périodiques 134
Données astronomiques. Mars
relatées aux dimensions de Grande pyramide 242
Dynamique. Planètes 227
Dynamique. Satellites artificiels
- Textes en français 413
Dynamique. Vol spatial 364
Dyson, Freeman John. Astrophysique
Jusqu'à 1979 - Biographies 149
East Sussex
Herstmonceaux. Observatoires astronomiques: Royal Greenwich Observatory - Périodiques 87
Herstmonceaux. Observatoires astronomiques: Royal Greenwich Observatory 86
Herstmonceaux. Observatoires astronomiques: Royal Greenwich Observatory, jusqu'à 1975 88
Échanges thermiques
Applications au contrôle thermique des véhicules spatiaux
- Comptes-rendus 407
Éclipses. Soleil
- Points de vue anthroposophiques 276
Écoles secondaires. Grande-Bretagne
Matières d'enseignement: Vol spatial - Pour l'enseignement 358
Édimbourg
Observatoires astronomiques: Royal Observatory, Edimbourgh
- Périodiques 83
Observatoires astronomiques: Royal Observatory, Edimbourgh, jusqu'à 1972 - Comptes-rendus 82
Radiotélescopes. Organisation: Royal Observatory, Edimbourgh. U.K. Infrared Telescope Unit - Périodiques 96
Électrons. Système solaire
Charge. Variation 161

Energie. Spectres. Etoiles
Distribution - Pour les observations spectrophotométriques 309
Energie. Spectres. Spectroscopie ultraviolette. Etoiles
Distribution - Tables 310
Espace interplanétaire
Plasmas. Observation. Equipment & techniques 182
Espace intersidéral 10
- Pour les enfants 129
- Pour les enfants - Textes en irlandais 11
Exploration. Utilisation des machines - Pour les enfants 352
Poussières 194
Poussières - Comptes-rendus 195
Rayonnement cosmique de la grand énergie 164
Rayonnement électromagnétique 159
Rayons cosmiques. Composition 162
Rayons cosmiques. Variation 163
Théories, jusqu'à 1970 48
Vol spatial des véhicules habités. Skylab 374
Vol spatial des véhicules habités. Skylab, 1973-1974 375
Espace interstellaire
Matière 189
Matière. Structure & propriétés physiques
- Comptes-rendus 190
Molécules - Comptes-rendus 191
Etats-Unis
Gouvernement. Politique sur l'astronautique, jusqu'à 1975 350
Etoiles 279
- Atlas 317
- Atlas - Pour la navigation céleste 318
- Pour les enfants 282
Atmosphères. Observation. Equipment & techniques 280
Evolution 281
Formation 283
Identification - Tables 311
Intérieurs 284
Magnitude photovisuelle - Atlas 289
Mouvement propre 291
Spectres. Energie. Distribution - Pour les observations spectrophotométriques 309
Spectroscopie ultraviolette. Spectres. Energie. Distribution - Tables 310
Etoiles binaires s'éclipsant
Lumière. Variation 298
Etoiles binairese 293
Etoiles de neutrons
- Comptes-rendus 301
Structure & propriétés 302
Etoiles en rotation
Théories, 1611-1976 290
Etoiles froids
Spectroscopie de l'infrarouge proche 308
Etoiles ob
Distribution. Détermination. Applications de la photométrie 278
Etoiles pulsants 297
Etoiles variables
Observation - Manuels pour les amateurs 296
Etoiles variables à flare 300
Etoiles variables nebulaires 295
Etudes de faisabilité. Vol spatial interstellaire
Projet Daedalus 351
Evolution. Etoiles 281
Evolution. Galaxies 185
Evolution. Soleil 267
Exploration. Espace intersidéral
Utilisation des machines - Pour les enfants 352
Exploration interplanétaire
Influence sur les théories du système solaire, jusqu'à 1978 65
Fusées. Véhicules aérospatiaux
Jusqu'à 1974 416
Jusqu'à 1977 417
Développement, jusqu'à 1969 419
Propulsion 415

Galaxie
Simulation. Utilisation des monuments, ca av. J.-C.2500 198
Galaxies 183
Évolution 185
Images. Mesure. Organisations: Cosmos Facility - Périodiques 186
Noyaux actifs - Comptes-rendus 184
Propriétés physiques - Comptes-rendus 187
Rayonnement. Décalage vers le rouge. Interprétation - Comptes-rendus 154
Rayonnement. Décalage vers le rouge. Interprétation 207
Galilei, Galileo
Théories en mécanique céleste 53
Gouvernement. États-Unis
Politique sur l'astronautique, jusqu'à 1975 350
Grand Nuage de Magellan
Sources du rayonnement alpha-h - Cartes 192
Grande Ourse 287
Greenwich (Borough de Londres)
Observatoires astronomiques: Royal Greenwich Observatory, 1676 84
Observatoires astronomiques: Royal Greenwich Observatory, jusqu'à 1946 85
Hémisphère nord
Constellations - Cartes 316
Système solaire. Planètes - Cartes 257
Herschel, Sir John, 1st bart. Astronomie - Biographies 37
Herstmonceaux. East Sussex
Observatoires astronomiques: Royal Greenwich Observatory - Périodiques 87
Observatoires astronomiques: Royal Greenwich Observatory 86
Observatoires astronomiques: Royal Greenwich Observatory, jusqu'à 1975 88
Hoerbiger, Hans. Théories du système solaire 66
Identification. Étoiles - Tables 311
Images. Galaxies
Mesure. Organisations: Cosmos Facility - Périodiques 186
Instrumentation. Observation à partir de véhicules spatiaux. Corps astronomiques - Comptes-rendus 102
Interactions gravitationnels à la court distance. Corps astronomiques. Système solaire
Avec les planètes 59
Interactions gravitationnels à la court distance. Planètes. Système solaire
Avec les corps astronomiques 59
Intérferomètres d'intensité
Utilisation pour l'astronomie, jusqu'à 1973 107
Irwin, James Benson. Astronautique - Biographies 347
1971-1978 - Biographies 348
Japon
Astronomie, 600-1854. Aspects culturels 43
Jonction. Apollo. Vol spatial des véhicules habités
Avec Soyouz-19, 1975 397
Jupiter
Satellites. Orbites 251
Surface - Photographies prises depuis les véhicules spatiaux 252
Kensington and Chelsea (Borough de Londres)
Musées: British Museum (Natural History). Stock: Météorites - Catalogues 263
Lignes de recombinaison. Rayonnement radioélectrique. Corps astronomiques - Comptes-rendus 158
Limites. Univers 205
Lois de Képler. Calcul. Orbites. Planètes
Applications des ordinateurs digitaux 56
Londres
Greenwich (Borough de Londres). Observatoires astronomiques: Royal Greenwich Observatory, 1676 84
Greenwich (Borough de Londres). Observatoires astronomiques: Royal Greenwich Observatory, jusqu'à 1946 85

Londres
Kensington and Chelsea (Borough de Londres). Musées: British Museum (Natural History). Stock: Météorites - Catalogues 263
Lumière. Étoiles binaires s'éclipsant
Variation 298
Lune 217
- Comptes-rendus 218
- Pour les enfants 219
Mouvement. Newton, Sir Isaac. Theory of the moon's motion - Études critiques 224
Mouvement. Théories - Premier oeuvres - Facsimilés 70
Observations, jusqu'à 1978 220
Origine. Théories 71
Surface 221
Surface - Photographies prises depuis les véhicules spatiaux 223
Vol spatial, jusqu'à 1967 368
Vol spatial des véhicules habités - Pour les enfants 396
Vol spatial des véhicules habités. Apollo-11 389
Vol spatial des véhicules habités. Apollo-12 390
Vol spatial des véhicules habités. Apollo-13 391
Vol spatial des véhicules habités. Apollo-14 379
Vol spatial des véhicules habités. Apollo-15 392
Vol spatial des véhicules habités. Apollo-16 393
Vol spatial des véhicules habités. Apollo-17 394
Machines
Utilisation pour l'exploration de l'espace intersidéral - Pour les enfants 352
Magnitude photovisuelle. Étoiles
- Atlas 289
Mariner-10. Vol spatial. Mercure. Planètes 369
Mariner-10. Vol spatial. Vénus 370
Mariner-9
Vidicons. Télédétection de la surface du Mars 250
Mars
Données astronomiques relatées aux dimensions de Grande pyramide 242
Surface 243
Surface - Photographies prises depuis Viking-1 & 2 249
Surface - Pour les enfants 244
Surface. Observation, jusqu'à 1977 245
Surface. Observation, jusqu'à 1980 246
Surface. Observation, jusqu'à ca 1930 247
Surface. Télédétection. Mariner-9. Vidicons 250
Vol spatial des véhicules automatiques. Programme Viking 371
Masers célestes 126
Matière. Espace interstellaire 189
Structure & propriétés physiques - Comptes-rendus 190
Mécanique céleste
Théories de Galilei, Galileo 53
Mercure. Planètes
- Premier oeuvres 237
Surface 238
Surface - Photographies prises depuis Mariner-10 239
Vol spatial. Mariner-10 369
Météores
Jusqu'à 1969 258
Météorites 260
Météorites ferreux 259
Météorites. Stock. British Museum (Natural History) - Catalogues 263
Modèles de fusées
Aérodynamique 418
Modèles mathématiques. Univers 174
Molécules. Espace interstellaire
- Comptes-rendus 191
Monde antique
Astronomie 39
Astronomie - Comptes-rendus 40
Mont-Palomar. Californie
Télescopes astronomiques: Télescope Hale de 508 cm 97
Monuments
Ca av. J.-C.2500. Utilisation pour la simulation de la Galaxie 198

Mouvement. Lune
Newton, Sir Isaac. Theory of the moon's motion - Etudes critiques 224
Théories - Premier oeuvres - Facsimilés 70
Mouvement. Planètes. Système solaire
Théories - Premier oeuvres 60
Mouvement propre. Amas d'étoiles 306
Mouvement propre. Étoiles 291
Mouvement propre. Étoiles dans la région de l'équateur galactique à la longitude 140° 292
Mouvement rétrograde. Planètes. Système solaire 62
Mouvement. Satellites
- Comptes-rendus 319
Musées. Kensington and Chelsea (Borough de Londres)
British Museum (Natural History). Stock: Météorites
- Catalogues 263
Navettes spatiaux 372
- Pour les enfants 373
Nébuleuses
Observation - Manuels pour les amateurs 193
Observation, ca 100-ca 1800 202
Neptune
Découverte 255
Newton, Sir Isaac. Mouvement. Lune
Theory of the moon's motion - Etudes critiques 224
Noyaux actifs. Galaxies
- Comptes-rendus 184
Noyaux. Quasars
- Comptes-rendus 131
Nuages moléculaires interstellaires
- Comptes-rendus 188
Observation à partir de véhicules spatiaux. Corps astronomiques 101
Instrumentation - Comptes-rendus 102
Observation. Atmosphères. Etoiles
Equipment & techniques 280
Observation. Corps astronomiques
- Manuels pour les amateurs 73
Utilisation des télescopes astronomiques - Sujets étudiés: Crab Nebula 200
Observation. Étoiles variables
- Manuels pour les amateurs 296
Observation. Nébuleuses
- Manuels pour les amateurs 193
Ca 100-ca 1800 202
Observation. Plasmas. Espace interplanétaire
Equipment & techniques 182
Observation. Satellites artificiels
- Manuels pour les amateurs 400
Observation. Saturne
Jusqu'à 1960 254
Observation. Surface. Lune
- Manuels pour les amateurs 222
Observation. Surface. Mars
Jusqu'à 1977 245
Jusqu'à 1980 246
Jusqu'à ca 1930 247
Observation. Voile X
Par les astronomes sumériens 305
Observations. Corps astronomiques
Jusqu'à 1604. Applications 74
Observations. Lune
Jusqu'à 1978 220
Observations. Planètes. Système solaire
Effets des temps des éphémérides, ca av. J.-C.2000-ap. J.-C.1019 236
Observatoires astronomiques 80
Observatoires astronomiques. Édimbourg
Royal Observatory, Edimbourgh - Périodiques 83
Royal Observatory, Edimbourgh, jusqu'à 1972
- Comptes-rendus 82
Observatoires astronomiques. États-Unis
- Guides pour les visiteurs 81
- Guides pour les visiteurs 81

Observatoires astronomiques. Greenwich (Borough de Londres)
Royal Greenwich Observatory, 1676 84
Royal Greenwich Observatory, jusqu'à 1946 85
Observatoires astronomiques. Herstmonceaux. East Sussex
Royal Greenwich Observatory - Périodiques 87
Royal Greenwich Observatory 86
Royal Greenwich Observatory, jusqu'à 1975 88
Oort, Jan Hendrik. Astronomie. Pays-Bas
- Livre d'or 38
Optimisation. Trajectoires. Vol spatial 365
Orages de bruit. Soleil 272
Orbites. Corps astronomiques 54
Calcul 55
Orbites. Planètes 229
Calcul (Lois de Képler). Applications des ordinateurs digitaux 56
Orbites. Satellites. Jupiter 251
Ordinateurs digitaux
Applications au calcul des orbites des planètes par les lois de Képler 56
Origine. Lune
Théories 71
Origines. Planètes
Théories, jusqu'à 1977 67
Origines. Planètes. Système solaire 61
Origines. Système solaire 57
- Comptes-rendus 58
Origines. Vénus
Théories de Velikovsky, Immanuel - Etudes critiques 68
Théories de Velikovsky, Immanuel. Critique, 1950-1977 69
Pays-Bas
Astronomie. Oort, Jan Hendrik - Livre d'or 38
Petit Nuage de Magellan
- Atlas 197
Photographies prises à partir de satellites artificiels. Surface. Terre 320
Photographies prises depuis les véhicules spatiaux
Jupiter. Surface 252
Lune. Surface 223
Saturne. Surface 253
Terre. Surface 321
Vénus. Surface 241
Photographies prises depuis Mariner-10
Planètes: Mercure. Surface 239
Photographies prises depuis Viking-1 & 2
Mars. Surface 249
Photométrie
Applications à la détermination de la distribution des étoiles ob 278
Physique cosmique
- Périodiques 142
Physique théorique. Applications à l'astrophysique 137
Planétariums
Jusqu'à 1977 135
Planètes
Atmosphère 226
Dynamique 227
Orbites 229
Orbites. Calcul (Lois de Képler). Applications des ordinateurs digitaux 56
Origines. Théories, jusqu'à 1977 67
Planètes géants. Système solaire
Constituants chimiques - Comptes-rendus 230
Planètes. Système solaire 231
- Comptes-rendus 232
Interactions gravitationnels à la court distance avec les corps astronomiques 59
Mouvement rétrograde 62
Mouvement. Théories - Premier oeuvres 60
Observations. Effets des temps des éphémérides, ca av. J.-C.2000-ap. J.-C.1019 236
Origines 61
Polarité 233

Planètes. Système solaire
Structure & propriétés physiques 234
Vélocité tangentielle. Théories 63
Planètes. Système solaire. Hémisphère nord
- Cartes 257
Planètes terrestres. Système solaire 235
Plasmas
Aspects astrophysiques 143
Plasmas. Espace interplanétaire
Observation. Équipment & techniques 182
Plasmas. Système solaire 212
Pluton
Découverte - Observations personnels 256
Points de vue anthroposophiques
Soleil. Éclipses 276
Polarité. Planètes. Système solaire 233
Politique. États-Unis
Sur l'astronautique, jusqu'à 1975. Gouvernement 350
Pour la geophysique
Terre. Rotation 330
Pour la navigation céleste
Étoiles - Atlas 318
Pour l'astrologie
Astronomie 15
Pour l'enseignement
Grande-Bretagne. Écoles secondaires. Matières d'enseignement: Vol spatial 358
Pour les observations spectrophotométriques
Étoiles. Spectres. Énergie. Distribution 309
Poussières. Espace intersidéral 194
- Comptes-rendus 195
Processus plasmiques. Astrophysique 140
Procyon
Spectres - Illustrations 294
Programme Viking. Mars
Vol spatial des véhicules automatiques 371
Projet Apollo-Soyouz. Vol spatial des véhicules habités 378
Projet Daedalus 351
Projets. Astronomie 7
Propriétés physiques. Galaxies
- Comptes-rendus 187
Propriétés physiques. Matière. Espace interstellaire
- Comptes-rendus 190
Propriétés physiques. Planètes. Système solaire 234
Propriétés physiques. Radiogalaxies 196
Propriétés thermiques. Véhicules spatiaux
- Comptes-rendus 404
Propulsion. Fusées. Véhicules aérospatiaux 415
Pulsars 130
Quasars
Noyaux - Comptes-rendus 131
Radioastronomie 108
Jusqu'à 1974 109
Jusqu'à 1977 110
Radioastronomie. Grande-Bretagne 111
Jusqu'à 1975 112
Radioastronomie solaire
Jusqu'à 1978 271
Radiogalaxies
Propriétés physiques 196
Radiotélescopes. Édimbourg
Organisation: Royal Observatory, Edimbourgh. U.K. Infrared Telescope Unit - Périodiques 96
Rayonnement. Corps astronomiques 157
Rayonnement électromagnétique. Espace intersidéral 159
Rayonnement. Galaxies
Décalage vers le rouge. Interprétation - Comptes-rendus 154
Décalage vers le rouge. Interprétation 207
Rayonnement radioélectrique. Corps astronomiques
Lignes de recombinaison - Comptes-rendus 158
Rayons cosmiques. Espace intersidéral
Composition 162
Variation 163
Rotation. Terre
- Comptes-rendus 328

Rotation. Terre
- Pour la geophysique 330
Variation 329
Royal Greenwich Observatory
- Périodiques 86
1676 87
Jusqu'à 1946 84
Jusqu'à 1975 85
Royal Observatory, Edimbourgh 88
- Périodiques
Jusqu'à 1972 - Comptes-rendus 83
Royal Observatory, Edimbourgh. U.K. Infrared Telescope Unit 82
- Périodiques
Satellites 96
Mouvement - Comptes-rendus
Satellites artificiels 319
- Pour les enfants 398
- Tables 399
Dynamique - Textes en français 401
Observation - Manuels pour les amateurs 413
Satellites artificiels russes 400
Jusqu'à 1970
Satellites. Jupiter 402
Orbites
Saturne 251
Observation, jusqu'à 1960
Surface - Photographies prises depuis les véhicules 254
spatiaux
Science Research Council (Grande-Bretagne). Solar System 253
Committee
- Périodiques
Simulation. Galaxie 215
Utilisation des monuments, ca av. J.-C.2500
Singularités. Corps astronomiques 198
Skylab. Vol spatial des véhicules habités. Espace 121
interstidéral
1973-1974 374
Soleil 375
- Pour les écoles - Textes en gallois 266
- Pour les enfants 269
Chromosphère 268
Chromosphère. Perturbations 274
Cycle de vie 275
Éclipses - Points de vue anthroposophiques 270
Évolution 276
Orages de bruit 267
Sources du rayonnement alpha-h. Grand Nuage de Magellan 272
- Cartes
Soyouz-19 192
Vol spatial des véhicules habités. Jonction avec Apollo,
1975 397
Spectres. Étoiles
Énergie. Distribution - Pour les observations
spectrophotométriques 309
Spectres. Procyon
- Illustrations 294
Spectres. Spectroscopie ultraviolette. Étoiles
Énergie. Distribution - Tables 310
Spectromètres astronomiques 106
Spectroscopie de l'infrarouge proche. Étoiles froids 308
Spectroscopie ultraviolette. Étoiles
Spectres. Énergie. Distribution - Tables 310
Supernovae 304
Surface. Jupiter
- Photographies prises depuis les véhicules spatiaux 252
Surface. Lune 221
- Photographies prises depuis les véhicules spatiaux 223
Observation - Manuels pour les amateurs 222
Surface. Mars 243
- Photographies prises depuis Viking-1 & 2 249
- Pour les enfants 244
Observation, jusqu'à 1977 245
Observation, jusqu'à 1980 246
Observation, jusqu'à ca 1930 247

Surface. Mars
Télédétection. Mariner-9. Vidicons 250
Surface. Mercure. Planètes 238
- Photographies prises depuis Mariner-10 239
Surface. Saturne
- Photographies prises depuis les véhicules spatiaux 253
Surface. Terre
- Photographies prises depuis les véhicules spatiaux 321
Photographies prises à partir de satellites artificiels 320
Surface. Vénus 240
- Photographies prises depuis les véhicules spatiaux 241
Système solaire 208
- Périodiques 214
- Pour les écoles 210
- Pour les enfants 209
- Questions & solutions 216
Électrons. Charge. Variation 161
Mesure 211
Organisations de recherche: Science Research Council (Grande-Bretagne). Solar System Committee - Périodiques 215
Origines 57
Origines - Comptes-rendus 58
Planètes 231
Planètes - Comptes-rendus 232
Planètes géants. Constituants chimiques - Comptes-rendus 230
Planètes. Interactions gravitationnels à la court distance avec les corps astronomiques 59
Planètes. Mouvement rétrograde 62
Planètes. Mouvement. Théories - Premier oeuvres 60
Planètes. Observations. Effets des temps des éphémérides, ca av. J.-C.2000-ap. J.-C.1019 236
Planètes. Origines 61
Planètes. Polarité 233
Planètes. Structure & propriétés physiques 234
Planètes terrestres 235
Planètes. Vélocité tangentielle. Théories 63
Plasmas 212
Théories 64
Théories d'Hoerbiger, Hans 66
Théories. Influence de l'exploration interplanétaire, jusqu'à 1978 65
Système solaire. Hémisphère nord
Planètes - Cartes 257
Systèmes de commande automatiques
- Comptes-rendus 423
Systèmes de propulsion électriques. Véhicules spatiaux
- Comptes-rendus 420
Taches solaires 273
Télédétection. Surface. Mars
Mariner-9. Vidicons 250
Télescope Hale de 508 cm. Mont-Palomar 97
Télescopes astronomiques
- Pour les enfants 93
Jusqu'à 1953 94
Jusqu'à 1975 95
Utilisation pour l'observation des corps astronomiques
- Sujets étudiés: Crab Nebula 200
Télescopes astronomiques. Mont-Palomar. Californie
Télescope Hale de 508 cm 97
Télescopes optiques astronomiques 89
- Manuels pour les amateurs 90
Utilisation - Manuels pour les amateurs 92
Température. Véhicules spatiaux
Contrôle. Applications des échanges thermiques
- Comptes-rendus 407
Temps des éphémérides
Effets sur les observations des planètes du système solaire, ca av. J.-C.2000-ap. J.-C.1019 236
Terre
Densité 324
Rotation - Comptes-rendus 328
Rotation - Pour la geophysique 330
Rotation & orbite 326
Rotation. Variation 329

Terre
  Surface - Photographies prises depuis les véhicules spatiaux 321
  Surface. Photographies prises à partir de satellites artificiels 320
Terre. Planètes 322
  - Pour les enfants 323
Théorie de relativité générale
  Applications dans les théories des cachots 125
Théorie de relativité générale. Cosmogonie 204
Théorie dynamo 156
Theory of the moon's motion. Newton, Sir Isaac. Mouvement. Lune
  - Etudes critiques 224
Trajectoires. Vol spatial
  Optimisation 365
Trous blancs 132
Univers 168
  - Illustrations 175
  - Pour les enfants 169
  Jusqu'à 1977 179
  Jusqu'à 1978 180
  Limites 205
  Modèles mathématiques 174
  Structure 181
  Théories 170
  Théories - Premier oeuvres 171
  Théories, ca av. J.-C.3000-ap. J.-C.1687 178
  Théories des civilisations anciens 172
Univers visible depuis l'hémisphère sud. Régions étudiés
  Astronomie descriptive 127
University of Cambridge. Institute of Astronomy
  - Périodiques 20
URSS
  Astronautique, jusqu'à 1972 349
Variation. Charge. Electrons. Système solaire 161
Variation. Lumière. Etoiles binaires s'éclipsant 298
Variation. Rayons cosmiques. Espace intersidéral 163
Variation. Rotation. Terre 329
Véhicules spatiaux
  - Comptes-rendus 403
  - Données techniques 405
  - Illustrations - Pour les enfants 406
  - Prévisions 412
  Jusqu'à 1975 - Pour les écoles 409
  Jusqu'à 1975 - Pour les enfants 408
  Jusqu'à 1978 410
  Jusqu'à 1979 - Pour les enfants 411
  Astronautes. Conditions de vie 421
  Contrôle 357
  Contrôle automatique - Comptes-rendus 414
  Propriétés thermiques - Comptes-rendus 404
  Systèmes de propulsion électriques - Comptes-rendus 420
  Température. Contrôle. Applications des échanges thermiques - Comptes-rendus 407
  Utilisation pour l'astrophysique relativiste - Comptes-rendus 145
Velikovsky, Immanuel
  Théories en origines en Vénus - Etudes critiques 68
Vélocité tangentielle. Planètes. Système solaire
  Théories 63
Vénus
  Origines. Théories de Velikovsky, Immanuel - Etudes critiques 68
  Origines. Théories de Velikovsky, Immanuel. Critique, 1950-1977 69
  Surface 240
  Surface - Photographies prises depuis les véhicules spatiaux 241
  Vol spatial. Mariner-10 370
Vidicons. Mariner-9
  Télédétection de la surface du Mars 250
Voie Lactée 199

Voile X
  Observation par les astronomes sumériens 305
Vol spatial 353
  - Pour les enfants 355
  - Prévisions 356
  Jusqu'à 1975 - Pour les enfants 361
  Jusqu'à 1977 359
  Jusqu'à 1977 - Pour les enfants 362
  Jusqu'à 1978 360
  Applications de la légèreté humaine 354
  Aspects économiques, jusqu'à 1972 422
  Dynamique 364
  Trajectoires. Optimisation 365
Vol spatial des véhicules automatiques
  Jusqu'à 1973 367
Vol spatial des véhicules automatiques. Mars
  Programme Viking 371
Vol spatial des véhicules habités 377
  - Illustrations 380
  Jusqu'à 1970 382
  Jusqu'à 1974 383
  Jusqu'à 1975 - Pour les enfants 384
  Jusqu'à 1976 385
  Jusqu'à 1978 386
  Jusqu'à 1980 381
  Apollo. Jonction avec Soyouz-19, 1975 397
  Projet Apollo-Soyouz 378
Vol spatial des véhicules habités. Espace intersidéral
  Skylab 374
  Skylab, 1973-1974 375
Vol spatial des véhicules habités. Lune
  - Pour les enfants 396
  Apollo-11 389
  Apollo-12 390
  Apollo-13 391
  Apollo-14 379
  Apollo-15 392
  Apollo-16 393
  Apollo-17 394
Vol spatial interstellaire
  Études de faisabilité: Projet Daedalus 351
Vol spatial interstellaire des véhicules habités 376
Vol spatial. Lune
  Jusqu'à 1967 368
Vol spatial. Matières d'enseignement. Écoles secondaires. Grande-Bretagne
  - Pour l'enseignement 358
Vol spatial. Mercure. Planètes
  Mariner-10 369
Vol spatial soviétique
  Jusqu'à 1978 363
Vol spatial. Vénus
  Mariner-10 370

APPENDIX G

PROGRAM MT11C1 (TEXT PREPARATION)

Program listing 190

Flowcharts 197

Text preparation - MT11C1

```
1 REM Takes PRECIS strings & reads them into text and operator
2 ' matrices; rewriting them as downward &upward reading strings
3 ' without printing results
5 ON ERROR GOTO 99000
10 DIM A$(100),B$(50),Y$(50),Y1$(50)
100 ' reading file
110 FILE#1:"PREDE5",2771
115 RESET#1:0
120 READ#1:A1$
125 IF UPK(A1$)<LOF(1) THEN 130
127 RESET#1:0
128 WRITE#1:PAK$(1,2)
129 PRINT CHR$(17)\S TO P
130 RESET#1:UPK(A1$)
135 A1$=""
140 READ#1:A1$
145 IF UPK(SEG$(A1$,1,2))<173 THEN 155
150 READ#1:A2$
155 A1$=""&A1$&A2$
160 A2$=""
165 A1$=""&SEG$(A1$,3,LEN(A1$))
167 PRINT LIN$(1)&A1$&LIN$(1)
170 IF POS(A1$,"#",1)=0 THEN 180
172 N=VAL(SEG$(A1$,POS(A1$,"#",1)+1,LEN(A1$)))
175 A1$=""&SEG$(A1$,1,POS(A1$,"#",1)-1)
180 A=LOC(1)
185 RESET#1:0
190 WRITE#1:PAK$(A,2)
200 ' Analysis to matrices begins
205 L=LEN(A1$)
210 I=1
215 P1=2
220 J=1
240 P=POS(A1$,"$",P1)
250 IF SUB$(A1$,I+1,1)<"x" THEN 290
255 ' Focus codes
260 FOR Y=1 TO 5
270  A$(Y)=""&SEG$(A$(Y),1,J-1)&SEG$(A1$,I+Y,I+Y)
280 NEXT Y
285 GOTO 690
287 ' Routines for difference codes
290 IF SUB$(A1$,I+1,1)<"4" THEN 560
300 IF SUB$(A1$,I+1,1)<"h" THEN 350
310 IF SUB$(A1$,I+1,1)="h" THEN 380
320 IF SUB$(A1$,I+1,1)="i" THEN 430
330 IF SUB$(A1$,I+1,1)="k" THEN 410
340 IF SUB$(A1$,I+1,1)="m" THEN 460
350 A$(1)=""&SEG$(A$(1),1,J-1)&SUB$(A1$,I+1,1)
355 A$(4)=""&SEG$(A$(4),1,J-1)&SUB$(A$(4),J-1,1)
360 IF SUB$(A1$,I+1,1)="o" THEN 480
370 GOTO 500
380 A$(4)=""&SEG$(A$(4),1,J-1)&"1"
390 A$(1)=""&SEG$(A$(1),1,J-1)&"0"
400 GOTO 500
410 A$(4)=""&SEG$(A$(4),1,J-1)&"2"
```

Text preparation - MT11C1

```
420 GOTO 390
430 A$(4)=""&SEG$(A$(4),1,J-1)&"1"
440 A$(1)=""&SEG$(A$(1),1,J-1)&"2"
450 GOTO 480
460 A$(4)=""&SEG$(A$(4),1,J-1)&"2"
470 GOTO 440
480 A$(3)=""&SEG$(A$(3),1,J-1)&"1"
490 GOTO 510
500 A$(3)=""&SEG$(A$(3),1,J-1)&"0"
505 IF SUB$(A1$,I+1,1)>"u" THEN 515
510 A$(2)=""&SEG$(A$(2),1,J-1)&SUB$(A$(2),J-1,1)
512 GOTO 520
515 A$(2)=""&SEG$(A$(2),1,J-1)&" "
520 A$(5)=""&SEG$(A$(5),1,J-1)&SUB$(A$(5),J-1,1)
530 IF P<1 THEN 552
540 B$(J)=""&SEG$(A1$,I+2,P-1)
550 GOTO 740
552 B$(J)=""&SEG$(A1$,I+2,L)
554 GOTO 800
560 A$(1)=""&SEG$(A$(1),1,J-1)&SUB$(A1$,I+1,1)
570 A$(2)=""&SEG$(A$(2),1,J-1)&SUB$(A$(2),J-1,1)
580 A$(5)=""&SEG$(A$(5),1,J-1)&SUB$(A$(5),J-1,1)
590 A$(4)=""&SEG$(A$(4),1,J-1)&SUB$(A1$,I+2,1)
600 IF SEG$(A1$,I+1,I+1)>"1" THEN 630
610 A$(3)=""&SEG$(A$(3),1,J-1)&"0"
620 GOTO 640
630 A$(3)=""&SEG$(A$(3),1,J-1)&"1"
640 IF P<1 THEN 670
650 B$(J)=""&SEG$(A1$,I+3,P-1)
660 GOTO 740
670 B$(J)=""&SEG$(A1$,I+3,L)
680 GOTO 800
690 IF P<1 THEN 720
700 B$(J)=""&SEG$(A1$,I+6,P-1)
710 GOTO 740
720 B$(J)=""&SEG$(A1$,I+6,L)
730 GOTO 800
740
745 I=P
750 J=J+1
760 P1=P+1
770 GOTO 240
800 'adding 6th line to code matrix
801 A$(6)=""
802 FOR J=1 TO LEN(A$(2))
803  A$(6)=""&A$(6)&PAK$(J,1)
804 NEXT J
810 'labelling subthemes
812 A=B=0
815 A$(7)=""
820 FOR C=1 TO LEN(A$(2))
823  IF OCC("xy",SEG$(A$(1),C,C))>0 THEN 840
825  IF SEG$(A$(1),C,C)="z" THEN 832
827  'must be j n o d v or w; or adjectival difference
830  IF A=1 THEN 843
```

Text preparation - MT11C1

```
832  A=0
835  A$(7)=""&SEG$(A$(7),1,C-1)&PAK$(0,1)
837  GOTO 850
840  A=1
843  IF SEG$(A$(1),C,C)<>"x" THEN 847
845  B=B+1
847  A$(7)=""&SEG$(A$(7),1,C-1)&PAK$(B,1)
850 NEXT C
855 A$(0)=""&ENC$(7+LEN(A$(2)),2)&ENC$(B,2)
         &ENC$(0,2)'general control row
864
865 'Putting all into one matrix
870 FOR J=1 TO LEN(A$(2))
875  A$(J+7)=""&B$(J)
880 NEXT J
885 FOR J=0 TO LEN(A$(2))
890  B$(J)=""
895 NEXT J
1000 'making phrases
1010 I=DEC(SEG$(A$(0),5,6))
1020 IF DEC(SEG$(A$(0),3,4))=0 THEN 1040
1030 I=I+1
1040 A=DEC(SEG$(A$(0),1,2)) 'length of data
1045 A$(0)=""&RPL$(A$(0),ENC$(I,2),5)
1050 'putting coding & text into Y$ & Y1$
1060 FOR J=1 TO LEN(A$(2))
1070  IF UPK(SEG$(A$(7),J,J))=I THEN 1090
1080  IF UPK(SEG$(A$(7),J,J))<>0 THEN 1130
1090  FOR P=1 TO 6
1100   Y$(P)=""&Y$(P)&SEG$(A$(P),J,J)
1110  NEXT P
1120  Y1$(LEN(Y$(2)))=""&A$(UPK(SEG$(A$(6),J,J))+7)
1130 NEXT J
1200 'making phrases
1210 A1$=""&"dno"  'ops to do seperately
1215 I=0
1220 J=A+8
1225 P=L=1 'L = op in A1$
1230 GOSUB 1365  'set control row
1235 GOSUB 1375  'search for op
1250 'do other ops
1255 GOSUB 1355 'set control row
1260 FOR L=2 TO LEN(A1$)
1265  GOSUB 1375 'search for op
1270 NEXT L
1275 A1$=""
1300 'doing lead only
1305 GOSUB 1355 'set control row
1307 B=J
1310 P=2
1315 I=POS(Y$(5),"0",I+1)
1320 IF I=0 THEN 1500
1325 IF OCC("zyx",SEG$(Y$(1),I,I))=0 THEN 1315
1330 GOSUB 1400 'put ops into matrix
1335 GOTO 1315
```

Text preparation - MT11C1

```
1349
1350 '  *  *  *  *  SUB-ROUTINES *  *  *  *
1355 'set control row
1360 J=J+(DEC(A$(J))*3)+1
1365 A$(J)=""&ENC$(0,2)
1370 RETURN
1371
1375 'searching for ops
1380 I=POS(Y$(1),SEG$(A1$,L,L),I+1)
1385 IF I=0 RETURN
1390 GOSUB 1400 'put ops in matrix
1395 GOTO 1380
1396
1400 'put ops in matrix
1403 P1=J+(DEC(A$(J))*3)+1
1405 A$(P1)=""&A$(UPK(SEG$(Y$(6),I,I))+7)&"|"
1410 A$(P1+1)=""&SEG$(Y$(P),I,I)&GAP$(LEN(A$(P1))-2)&"|"
1412 A$(P1+2)=""&SEG$(Y$(6),I,I)&GAP$(LEN(A$(P1))-2)&"|"
1415 A$(J)=""&ENC$(DEC(A$(J))+1,2)
1420 RETURN
1499
1500 'downward string
1505 I=1  'pointer
1510 GOSUB 1600 'find end of concept
1520 IF OCC("02",SEG$(Y$(5),I,I))=0 THEN 1525 'LO or ND
1522 L=0
1523 GOTO 1535
1525 L=FNB(I,J,A+2,"v") 'concatenating concepts
1530 L=VAL(SEG$(Y$(4),I,I))'find next relevant section
1535 I=J+1
1540 IF L=0 THEN 1565
1545 GOSUB 1600
1550 L=L-1
1555 GOTO 1535
1565 IF I=<LEN(Y$(2)) THEN 1510 'is end reached
1570 GOTO 1700
1600 '  *  *  *  SUB-ROUTINES  *  *  *
1605 J=I
1610 J=J+1
1620 IF J>LEN(Y$(1)) THEN 1630
1625 IF OCC("zyx",SEG$(Y$(1),J,J))=0 THEN 1610
1630 J=J-1
1635 RETURN
1700 'upward string
1705 I=LEN(Y$(2)) 'pointer
1710 GOSUB 1800  'find end of concept
1720 IF OCC("01",SEG$(Y$(5),J,J))=0 THEN 1725  'LO or NU
1722 L=0
1723 GOTO 1735
1725 L=FNB(J,I,A+5,"w")
1730 L=VAL(SEG$(Y$(4),J,J)) 'find next relevant section
1735 I=J-1
1740 IF L=0 THEN 1765
1745 GOSUB 1800
1750 L=L-1
```

Text preparation - MT11C1

```
1755 GOTO 1735
1765 IF I>0 THEN 1710  'is beginning reached
1770 GOTO 1900
1800 '  *  *  *  SUB-ROUTINE  *  *  *
1805 J=I
1820 IF J<1 THEN 1840
1825 IF OCC("zyx",SEG$(Y$(1),J,J))>0 RETURN
1830 J=J-1
1835 GOTO 1820
1840 J=1
1845 RETURN
1900 'writing control strings
1905 A$(A+1)=""&ENC$(((B+((DEC(A$(B)))*3))-A),2)
1910 A=B+(DEC(A$(B))*3)   'updating A to total length
1915 IF SEG$(A$(0),3,4)=SEG$(A$(0),5,6) THEN 1960
1920 I=DEC(SEG$(A$(0),5,6))+1
1925 FOR B=1 TO LEN(Y$(2))
1930  Y1$(B)=""
1935 NEXT B
1940 FOR B=1 TO 6
1945  Y$(B)=""
1950 NEXT B
1955 GOTO 1045
1960 A$(0)=""&SEG$(A$(0),1,2)&ENC$(A,2)&ENC$(N,2)
6000 FILE#2:"MT1XD1",2771
6010 SCRATCH#2
6020 MARGIN#2:174
6030 RESET#2:0
6040 FOR X=0 TO DEC(SEG$(A$(0),3,4))
6050  WRITE#2:SEG$(A$(X),1,174)
6060 NEXT X
6070 CHAIN "MT21C1,2771"
7999
9000 DEF FNB(X,X1,X4,X$) 'concatenating concepts
9100  'dealing with focus of concepts
9105  X3=X
9110  IF LEN(Y1$(X))=0 THEN 9150 'reject blank focus
9115  'put focus in temp matrix
9120  B$(1)=""&Y1$(X) 'text
9125  B$(2)=""&SEG$(Y$(2),X,X)&GAP$(LEN(Y1$(X))-1) 'operator
9130  B$(3)=""&SEG$(Y$(6),X,X)&GAP$(LEN(B$(1))-1) 'location
9135  GOTO 9200
9149
9150  'evaluating blank focus
9155  IF SEG$(Y$(2),X3,X3)<>"t" THEN 9550 'concatenate
9199
9200  'incrementing pointer
9205  X=X+1
9210  IF X>X1 THEN 9500 'concatenate
9220  X2=LEN(Y1$(X)) 'length of this part of concept
9225  IF OCC("dno",SEG$(Y$(1),X,X))>0 THEN 9200 'don't include
9230  IF OCC("vw",SEG$(Y$(1),X,X))>0 THEN 9300 'connectives
9235  IF OCC("13",SEG$(Y$(1),X,X))>0 THEN 9260 'no space difference
9240  'space generating difference
9249
```

Text preparation - MT11C1

```
9250  'differences
9255  X1$=""&"A"
9260  B$(1)=""&Y1$(X)&GAP$(LEN(X1$))&B$(1) 'text
9265  B$(2)=""&X1$&GAP$(X2)&B$(2) 'operator row
9270  B$(3)=""&GAP$(X2+(LEN(X1$)))&B$(3) 'location
9275  B$(3)=RPL$(B$(3),SEG$(Y$(6),X,X),1)
9280  X1$=""
9285  GOTO 9200
9299
9300  'connectives
9305  IF SEG$(Y$(1),X,X)<>X$ THEN 9200 'not appropriate connective
9310  IF LEN(Y1$(X))=0 THEN 9200 'blank connective
9315  B$(1)=""&B$(1)&" "&Y1$(X) 'data
9320  B$(2)=""&B$(2)&" "&X$&GAP$(X2-1)
9325  B$(3)=""&B$(3)&" "&SEG$(Y$(6),X,X)&GAP$(X2-1)
9330  GOTO 9200
9399
9500  'concatenating with previous concepts (if any)
9505  'remove space from front of temp matrix
9510  IF SEG$(B$(1),1,1)<>" " THEN 9535
9515  FOR X=1 TO 3
9520   B$(X)=""&SEG$(B$(X),2,LEN(B$(X)))
9525  NEXT X
9530  GOTO 9510
9535  'is this a `t'
9540  IF SEG$(Y$(2),X3,X3)="t" THEN 9650
9549
9550  'does this have the appropriate connective
9555  IF OCC(SEG$(Y$(1),X3,X1),X$)>0 THEN 9570
9560  X$=""&"|"
9565  GOTO 9600
9570  X$=""&" "
9599
9600  'add data & end marker (X$) to result matrix (A$)
9605  FOR X=0 TO 2
9610   A$(X4+X)=""&A$(X4+X)&B$(X+1)&X$
9615  NEXT X
9620  GOTO 9700
9649
9650  'special concatenating for `t'
9655  FOR X=0 TO 2
9660   A$(X4+X)=""&SEG$(A$(X4+X),1,LEN(A$(X4+X))-1)&" "&B$(X+1)&" "
9665  NEXT X
9699
9700  'housekeeping
9705  MAT B$=NUL$
9710  LET FNB=0
9715 FNEND
99000 'error routines
99100 NO ERROR
99105 FILE#1:"ERROR",2771
99110 IF LOF(1)>0 THEN 99135
99120 SCRATCH#1
99130 MARGIN#1:44
99135 RESET#1:LOF(1)
```

Text preparation - MT11C1

```
99140 WRITE#1:"MT11C1"&ENC$(N,2)&ENC$(ERL,4)&ENC$(ERR,2)
99150 CHAIN "MT11C1,2771"
99999 END
```

* * * END OF PRINT * * *

FLOWCHARTS

	Page
Main routine - MT11C1/1	198
Concatenate terms and add to store - MT11C1/2	199

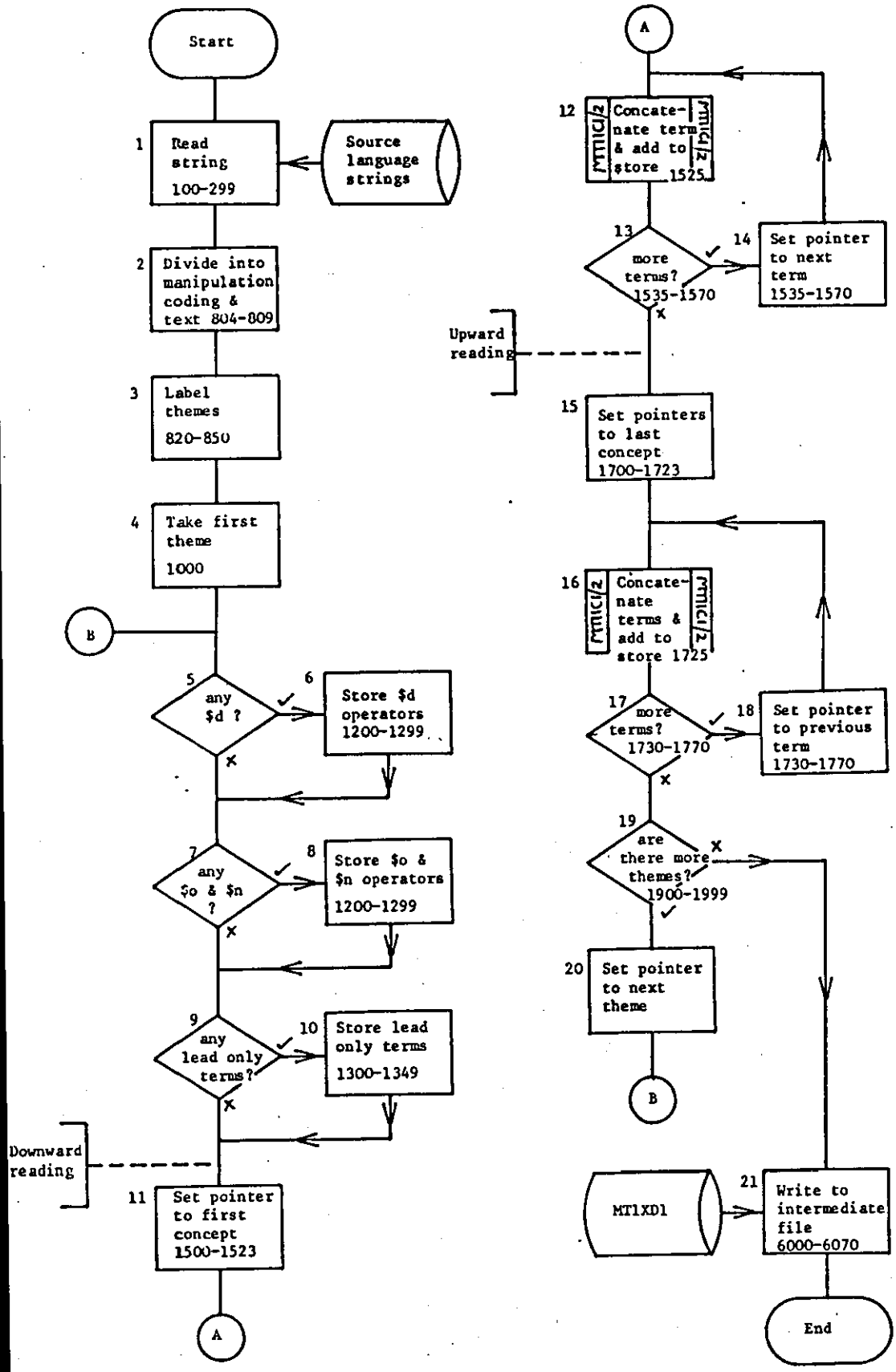

Text preparation / main routine / Sheet 1 of 1

MT11C1/1

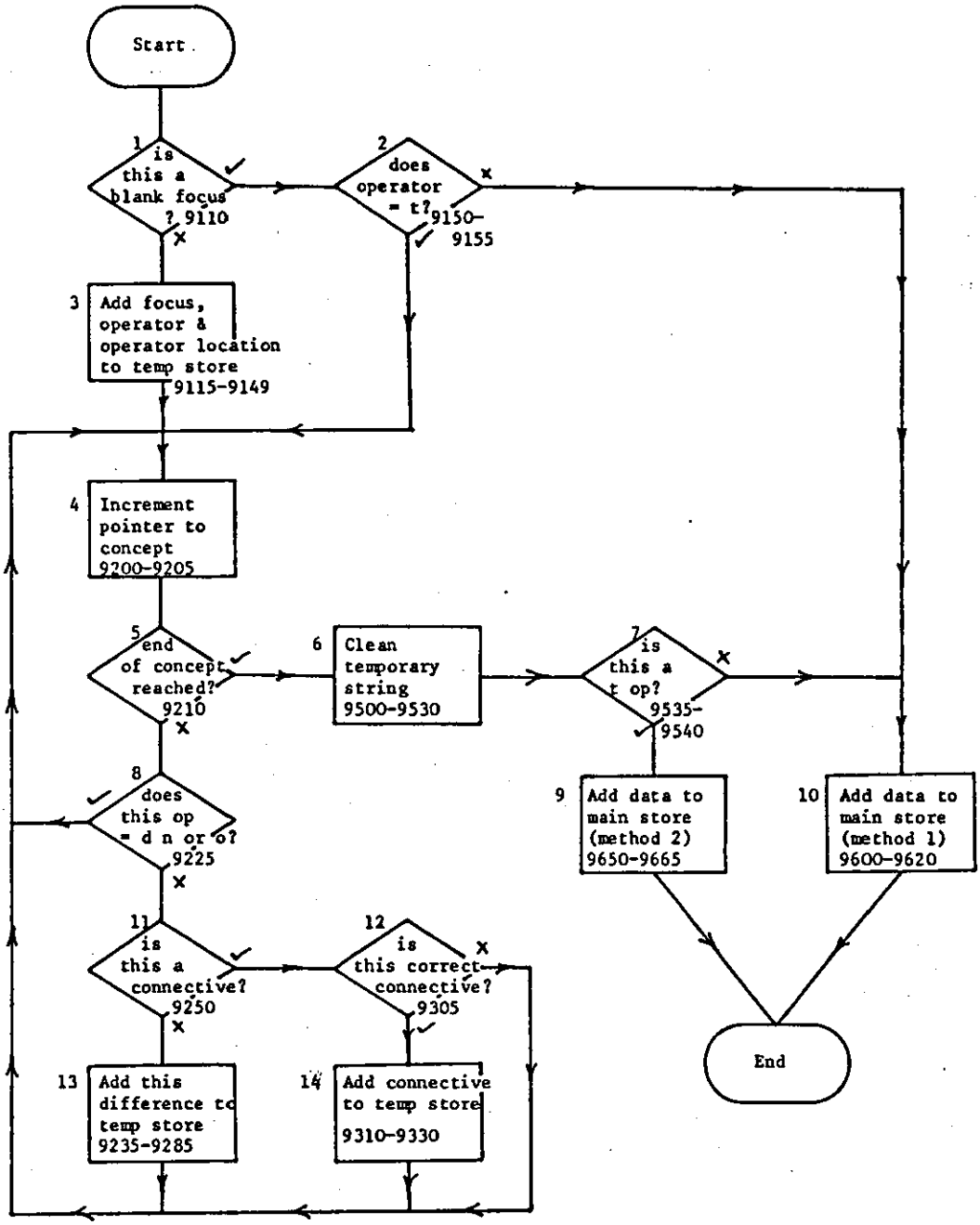

Text preparation / concatenate terms and add to store. /
Sheet 1 of 1 MT11C1/2

APPENDIX H

PROGRAM MT21C1 (SYNTACTIC ANALYSIS)

Program listing 201

Flowcharts 211

Syntactic analysis - MT21C1

```
1 REM syntax analyzer for English PRECIS using an RTN - PJH, DLIS, LUT
2 PRINT FSP
5 ON ERROR GOTO 1900
10 DIM A$(40),D$(3),G$(36),Y$(25),Y1$(11)
15 MARGIN#0:125
99
100 'reading transfer file
110 FILE#1:"MT1XD1",2771
115 RESET#1
120 READ#1:A$(0)
125 A=DEC(SEG$(A$(0),3,4))-DEC(SEG$(A$(0),1,2))
130 MAT A$=NUL$(A)
132 RESET#1:2
133 READ#1:P1$ 'holds ops
135 A=1
140 A1=DEC(SEG$(A$(0),1,2))+1
145 RESET#1:A1
150 READ#1:A$(A)
155 A=A+1
160 A1=A1+1
165 IF A1<LOF(1) THEN 150
175 A$(0)=SEG$(A$(0),1,6)&SEG$(A$(0),3,4)&ENC$(0,2)
200 'loading dictionary keys
205 MAT D$=NUL$
210 FILE#1:"MTEAH1",2771 'dict keys
215 RESET#1:0
220 READ#1:D$(0)
225 READ#1:D$(1)
230 READ#1:X$
235 D$(1)=D$(1)&X$
237 READ#1:D$(2) 'chars
240 READ#1:X$
245 D$(3)=D$(3)&X$
250 IF MORE#1 THEN 240
255 FILE#1:"MTEAD1",2771
299
999
1000 'taking section by section
1005 A=0
1050 B=A+2'downward
1055 GOSUB 3000'take string
1060 B=A+5 'upward
1065 GOSUB 3100 'take string - right to left
1070 B=A+8 'dates
1075 B=B+(DEC(A$(B))*3)+1
1080 'o & n
1085 C=B
1090 IF DEC(A$(B))=0 THEN 1110
1095 FOR B=B+1 TO B+(DEC(A$(B))*3) STEP 3
1100  GOSUB 3000'take string
1105 NEXT B
1110 'lead only
1115 C=B=C+(DEC(A$(C))*3)+1
1120 IF DEC(A$(B))=0 THEN 1140
1125 FOR B=B+1 TO B+(DEC(A$(B))*3) STEP 3
```

Syntactic analysis - MT21C1

```
1130  GOSUB 3000'take string
1135 NEXT B
1140 A=C+(DEC(A$(C))*3)
1145 IF A<DEC(SEG$(A$(0),3,4))-DEC(SEG$(A$(0),1,2)) THEN 1050
1200 'writing to file
1205 FILE#1:"MT1XD1",2771
1210 RESET#1
1215 IF DEC(SUB$(A$(0),9,2))>0 THEN 1230
1220 WRITE#1:SUB$(A$(0),1,8)
1225 CHAIN "MT31C1,2771"
1230 WRITE#1:A$(0)
1235 CHAIN "MT25C1,2771"
1900 'errors
1905 X=FNZ("",ERL,ERR)
2999
3000 'SUBROUTINE
3010 'left to right
3015 P1=POS(A$(B+1),"6",1)
3020 IF P1=0 THEN 3150 'no `6' ops
3025 'loop to find `|' before `6'
3030 IF SUB$(A$(B+1),P1,1)="|" THEN 3045
3035 P1=P1-1
3040 IF P1>0 THEN 3030
3045 P1=P1+1
3050 GOTO 3150
3099
3100 'right to left
3105 P1=LEN(A$(B+1))
3110 IF SUB$(A$(B+1),P1,1)="6" THEN 3150
3115 P1=P1-1
3120 IF P1>0 THEN 3110
3149
3150 'read file to create parse matrix
3155 'housekeeping
3165 A$(B+1)="" 'where the results will go
3170 A1=0
3175 Y1$(0)="0"
3177 B1=POS(A$(B),"|",A1+1)
3180 IF B1=0 THEN 3300 'end reached
3185 IF B1-A1=1 THEN 3195
3190 GOSUB 4000 'control of file handling
3195 A1=B1
3200 GOTO 3175
3299
3300 'write records to file
3305 FILE#1:"MT1XD1",2771 'communication file
3310 B1=B+1+DEC(SUB$(A$(0),1,2)) 'where to put first record
3311 X=0 'counter to add 0 or 1 to next pointer (see line 3320)
3312 RESET#1:B1-1\WRITE#1:A$(B) 'write text & locations
            'cos they can be
3313 RESET#1:B1+1\WRITE#1:A$(B+2)'changed if a "+" is added instead o
          f","
3315 IF LEN(A$(B+1))<=MRG(1)-2 THEN 3350 'no trailer needed
3320 A$(B+1)=ENC$(LOF(1)+X,2)&A$(B+1) 'add next trailer address
3325 RESET#1:B1 ''write this record to communication file
```

Syntactic analysis - MT21C1

```
3330 WRITE#1:SUB$(A$(B+1),1,MRG(1))
3335 B1=LOF(1) 'reset file pointer to end of file
3337 X=1 'counter to add 0 or 1 to next pointer (see line 3320)
3340 A$(B+1)=SEG$(A$(B+1),MRG(1)+1,LEN(A$(B+1))) 'take off record
3341 '        already written
3345 GOTO 3315 '& write remainder of record
3350 A$(B+1)=ENC$(0,2)&A$(B+1) 'this is last record
3355 RESET#1:B1 'write it to communication file
3360 WRITE#1:A$(B+1)
3365 FOR B1=B TO B+2 'now wipe out records from A$()
3370  A$(B1)=""
3375 NEXT B1
3380 A$(0)=RPL$(A$(0),ENC$(LOF(1)-1,2),7) 'change master record
3385 FILE#1:"MTEAD1",2771 'open dictionary file
3390 RETURN
3999
4000 'file handling
4005 'housekeeping
4010 X=A1+1 'pointer to row in A$(B)
4015 X1=B1-1 'end of this section
4049
4050 'create search key
4055 X$=SEG$(A$(B),X,LEN(A$(B))-1) '(last char is always `|')
4060 FOR X2=1 TO LEN(X$) 'change to lower case
4065  IF POS("ABCDEFGHIJKLMNOPQRSTUVWXYZ",SUB$(X$,X2,1),1)=0 THEN 4075
4070  X$=RPL$(X$,CHR$(POS("ABCDEFGHIJKLMNOPQRSTUVWXYZ",SUB$(X$,X2,1),
          1)+96),X2)
4075 NEXT X2
4080 FOR X2=1 TO LEN(X$) 'change space to %
4085  IF SUB$(X$,X2,1)<>" " THEN 4095
4090  X$=RPL$(X$,"%",X2)
4095 NEXT X2
4099
4100 'search dictionary
4105 IF LEN(X$)>DEC(SUB$(D$(0),3,2))+1 THEN 4200 'failure
4110 IF LEN(X$)=DEC(SUB$(D$(0),3,2))+1 THEN 4125 'might have a conj
4115 X1$=FNA$(X$,0,0) 'search
4120 IF LEN(X1$)>0 THEN 4300 'something found
4125 'evaluate search
4130 IF SUB$(X$,LEN(X$),1)<>"," THEN 4200 'nothing found
4135 'see if this would work as word & `+' as conj
4140 X1$=FNA$(SUB$(X$,1,LEN(X$)-1),0,0) 'search
4145 IF LEN(X1$)=0 THEN 4200 'nothing found
4150 'success - so alter original string
4155 X2=LEN(X$)-2
4160 A$(B)=SUB$(A$(B),1,X+X2)&" *"&SEG$(A$(B),X+X2+2,LEN(A$(B)))
4165 A$(B+2)=SUB$(A$(B+2),1,X+X2)&" "
          &SEG$(A$(B+2),X+X2+1,LEN(A$(B+2)))
4170 X$=SUB$(X$,1,LEN(X$)-1)
4175 GOTO 4300 'something found
4199
4200 'nothing found
4203 X2=LEN(X$)
4205 IF SUB$(X$,X2,1)="|" THEN 4230
4207 GOTO 4220
```

Syntactic analysis - MT21C1

```
4210 IF X2<1 THEN 4227
4215 IF SUB$(X$,X2,1)="%" THEN 4230
4217 IF SUB$(X$,X2,1)="|" THEN 4230
4220 X2=X2-1
4225 GOTO 4210
4227 X=FNZ(SEG$(A$(B),X,LEN(A$(B))),CUL,502) 'error - no dict entry
4230 X$=SUB$(X$,1,X2-1)
4235 GOTO 4105
4299
4300 'word found - add to parse structure
4305 X2=VAL(Y1$(0))+1
4315 X3=POS(X1$,"$[",1)-1
4320 FOR X3=POS(X1$,"#$",1)+2 TO X3 STEP 6
4325  Y1$(X2)=Y1$(X2)&SUB$(X1$,X3,2)&GAP$(2)
4330 NEXT X3
4335 Y1$(X2)=Y1$(X2)&"|"&SUB$(X1$,1,POS(X1$,"#",1)-1)
4340 Y1$(0)=STR$(X2)
4349
4350 'increment pointer
4355 X=X+LEN(X$)+1
4360 IF X>X1 THEN 4370
4365 GOTO 4050
4370 X$=X1$=""
4399
4400 'go to ATN
4405 'choose which grammar
4410 IF B=A+2 THEN 4435
4415 IF B<>A+5 THEN 4450
4420 IF P1=0 THEN 4450
4425 IF A1>=P1 THEN 4450
4430 GOTO 4475
4435 IF P1=0 THEN 4450
4440 IF P1<=A1+1 THEN 4475
4449
4450 'grammar for all but op 6
4455 X$="MTS1G1"
4460 GOTO 4485
4475 'grammar for op 6
4480 X$="MTS2G1"
4485 IF SUB$(G$(1),1,6)=X$ THEN 4500
4490 X2=FNG(X$,0) 'load grammar
4495 FILE#1:"MTEAD1",2771 'analysis dictionary
4499
4500 'now parse
4505 'build control string
4510 X$=""
4515 FOR P=1 TO 7
4520  X$=X$&ENC$(0,2)
4525 NEXT P
4530 X$=X$&"FULL"
4535 P=0 'pointer to data
4537 MAT Y$=NUL$
4540 Y$(0)="1" 'where parser writes its first record
4545 X1$=FNB$(X$,"",0,0) 'parse
4550 IF LEN(X1$)>0 THEN 4560
```

Syntactic analysis - MT21C1

```
4555 X=FNZ(SEG$(A$(B),A1+1,X-1),CUL,501) 'fails to create parse
4560 GOSUB 4650 'adds top line & prints
4563 GOSUB 4750 'add to store
4565 GOSUB 4700 'lops off constitute for backtracking
4570 X1$=FNB$(X1$,X2$,0,0) 'backtracking call on RTN
4575 IF LEN(X1$)=0 THEN 4630
4580 FILE#1:"ERROR",2771 'multiple syntactic analyses - report
4590 IF LOF(1)>0 THEN 4600 'but don't stop this string from going thru
4595 MARGIN#1:44
4600 RESET#1:LOF(1)
4605 X2$=ENC$(CUL,4)&ENC$(504,2)&SEG$(A$(B),A1+1,POS(A$(B),"|",A1+1))
4607 WRITE#1:"MT21C4"&SUB$(A$(0),5,2)&SUB$(X2$,1,MRG(1)-8)
4610 FILE#1:"MTEAD1",2771 'analysis dictionary
4615 GOSUB 4650 'adds top line & prints
4620 GOSUB 4700 'lops off 1 constitute for backtracking
4625 GOTO 4570
4630 MAT Y$=NUL$
4632 Y$(0)=""
4635 MAT Y1$=NUL$
4637 Y1$(0)=""
4640 RETURN
4649
4650 'SUBROUTINE add top line & print
4655 Y$(1)="FULL"&ENC$(1,2)&ENC$(VAL(Y1$(0)),2)&ENC$(0,2)
4660 Y$(1)=Y$(1)&ENC$(0,2)&ENC$(0,2)&ENC$(2,2)&ENC$(1,2)&ENC$(0,2)
          &ENC$(0,2)
4665 IF G$(1)="MTS2G1" THEN 4690 'don't check these for PPs
4666 IF OCC(P1$,"5")=0 THEN 4668
4667 IF UPK(SUB$(A$(B+2),A1+1,1))>=POS(P1$,"5",1) THEN 4690
           'don't check
4668 IF DEC(SUB$(A$(0),9,2))>0 THEN 4690
4670 X2=1
4672 IF OCC(Y$(X2),"PP  ")>0 THEN 4685
4675 IF X2=VAL(Y$(0)) THEN 4690
4677 X2=X2+1
4680 GOTO 4672
4685 A$(0)=RPL$(A$(0),ENC$(1,2),9)
4690 RETURN
4699
4700 'SUBROUTINE lops off 1 constitute for backtracking
4705 X2$=SUB$(Y$(1),LEN(Y$(1))-21,22)
4710 Y$(1)=SUB$(Y$(1),1,LEN(Y$(1))-22) 'lop off 1 constitute record
4715 IF LEN(Y$(1))=0 THEN 4725 'no records to pointers
4720 Y$(1)=RPL$(Y$(1),ENC$(0,2)&ENC$(0,2),LEN(Y$(1))-3)
4725 X1$=SUB$(X$,1,2)&SUB$(X$,1,2)&SUB$(X$,5,2) 'start & end pos
          & rule
4730 X1$=X1$&ENC$(0,2)&ENC$(0,2) 'link from above
4735 X1$=X1$&ENC$(0,2)&ENC$(0,2)&"FULL" 'blanks & name
4740 X2$=SUB$(X2$,15,2) 'row which this constitute was linked to
4745 RETURN
4749
4750 'SUBROUTINE  - add to store
4755 FOR X2=0 TO VAL(Y1$(0)) 'write text
4760  A$(B+1)=A$(B+1)&"#1"&PAK$(X2,1)
```

Syntactic analysis - MT21C1

```
4765  A$(B+1)=A$(B+1)&SEG$(Y1$(X2),POS(Y1$(X2),"|",1)+1,LEN(Y1$(X2)))
          &"#"
4770 NEXT X2
4775 FOR X2=0 TO VAL(Y$(0)) 'write structure
4780  A$(B+1)=A$(B+1)&"#2"&PAK$(X2,1)&Y$(X2)&"#"
4785 NEXT X2
4790 A$(B+1)=A$(B+1)&"|"
4795 RETURN
4899
7000 DEF FNG(X$,X) 'load grammar
7005  MAT G$=NUL$
7010  FILE#1:X$,2771
7015  READ#1:G$(0)
7020  FOR X=1 TO LOF(1)-1
7025   READ#1:G$(X)
7030  NEXT X
7035  X$=""
7050 FNEND
7099
7500 DEF FNA$(X$,X,X1) 'search
7505  FOR X1=1 TO LEN(X$)
7510   X2=POS(D$(2),SUB$(X$,X1,1),1)
7515   X=X+(X2*(DEC(SUB$(D$(1),(X1*2)-1,2))))
7520  NEXT X1
7525  'key done - calculate hash no.
7530  X1$=ENC$(MOD(X,DEC(SUB$(D$(0),1,2))),2)
7549
7550  'search on core keys
7555  X2=0 'start of dict -1
7560  X2=POS(D$(3),X1$,X2+1)
7565  IF X2=0 THEN 7850
7570  IF MOD(X2+3,4)<>0 THEN 7560
7674
7675  'key found - is this correct record
7680  RESET#1:DEC(SUB$(D$(3),X2+2,2))
7685  READ#1:X1$
7690  'concatenate trailers (if necessary)
7695  IF DEC(SUB$(X1$,LEN(X1$)-1,2))=0 THEN 7800
7700  'binary search on backing store
7705  X=0 'search area start
7710  X1=LOF(1) 'search area end
7715  RESET#1:INT((X+X1)/2)
7720  READ#1:X2$
7725  IF SUB$(X2$,1,2)=SUB$(X1$,LEN(X1$)-1,2) THEN 7793
7730  IF SUB$(X2$,1,2)>SUB$(X1$,LEN(X1$)-1,2) THEN 7755 'in lower half
7735  'in upper half
7740  IF X=(INT((X+X1)/2))+1 THEN 7775 'failure to find trailer
7745  X=(INT((X+X1)/2))+1
7750  GOTO 7715
7755  'in lower half
7760  IF X1=INT((X+X1)/2) THEN 7775 'failure to find trailer
7765  X1=INT((X+X1)/2)
7770  GOTO 7715
7775  'failure to find trailers
7780  IF POS(SUB$(X1$,1,LEN(X1$)-4),"#",1)=0 THEN 7790
```

Syntactic analysis - MT21C1

```
7785  X=FNZ(SUB$(X1$,1,POS(X1$,"#",1)-1),CUL,503)
7790  X=FNZ(SUB$(X1$,1,LEN(X1$)-4),CUL,503)
7793  'add trailer record
7795  X1$=SUB$(X1$,1,LEN(X1$)-4)&SEG$(X2$,3,LEN(X2$))
7797  GOTO 7695
7799
7800  'whole record retrieved
7805  IF LEN(X$)>LEN(X1$) THEN 7815
7810  IF X$&"#"=SUB$(X1$,1,LEN(X$)+1) THEN 7825 'found
7815  X1$=SUB$(D$(3),X2,2)
7820  GOTO 7560 'continue search
7824
7825  LET FNA$=SUB$(X1$,1,LEN(X1$)-4) 'success
7830  GOTO 7860
7849
7850  'endings
7855  LET FNA$=""
7860  X$=X1$=X2$=""
7865 FNEND
7999
8000 DEF FNB$(X$,X2$,X,X1) 'ATN parser
8004  X1$=X2$
8005  X2$=SUB$(X$,15,4) 'name of net
8010  IF LEN(X1$)=0 THEN 8050 'not a backtracking call
8015  X1=DEC(SUB$(X1$,1,2)) ')
8020  X1$="" '                > housekeeping for backtracking call
8025  GOTO 8600 '             )
8049
8050  'housekeeping for non-backtracking call
8060  Y$(0)=STR$(VAL(Y$(0))+1)
8065  X1=VAL(Y$(0))
8099
8100  'find start of net
8105  X=5
8110  IF SUB$(G$(X),1,4)=X2$ THEN 8130
8115  X=X+1
8120  IF X<=VAL(G$(0)) THEN 8110
8125  STOP 'gone beyond end of grammar
8130  X2$="S1 " 'first state must be "S1"
8149
8150  'find state
8155  IF SUB$(G$(X),2,3)=X2$ THEN 8200 'success
8160  X=X+1
8165  IF X<=VAL(G$(0)) THEN 8155
8170  STOP 'gone beyond end of grammar
8199
8200  'what kind of test is this
8205  IF SUB$(G$(X),6,1)="*" THEN 8500 'end test
8210  IF P+1>VAL(Y1$(0)) THEN 8550 'get next test, because end of
8211  '     data has been reached without an end to the net
8215  IF SUB$(G$(X),6,1)<"A" THEN 8250 'unit
8220  IF SUB$(G$(X),6,1)<="Z" THEN 8350 'net
8249
8250  'this is a unit
8255  IF FNM(P+1,SUB$(G$(X),6,4))=0 THEN 8550 'get next test
```

Syntactic analysis - MT21C1

```
8260  'add record
8264  P=P+1
8265  Y$(X1)=Y$(X1)&SUB$(G$(X),6,4) 'name
8270  Y$(X1)=Y$(X1)&ENC$(P,2)&ENC$(P,2) 'start & end pos
8275  Y$(X1)=Y$(X1)&ENC$(X,2) 'rule
8280  Y$(X1)=Y$(X1)&SUB$(X$,7,4) 'link from above
8285  Y$(X1)=Y$(X1)&ENC$(0,2)&ENC$(P,2) 'link down
8290  Y$(X1)=Y$(X1)&ENC$(0,2)&ENC$(0,2) 'link along
8300  GOTO 8450 'change pointer along
8349
8350  'this is a net
8355  X1$=ENC$(P,2)&ENC$(P,2)&ENC$(X,2) 'start & end pos & rule
8360  X1$=X1$&ENC$(VAL(Y$(0)),2)&ENC$(LEN(Y$(VAL(Y$(0))))+1,2)
          'above link
8365  X1$=X1$&ENC$(0,2)&ENC$(0,2)&SUB$(G$(X),6,4) 'blanks & name
8370  X1$=FNB$(X1$,"",0,0) 'call on ATN
8375  IF LEN(X1$)=0 THEN 8550 'fails - get next test
8380  'add record (X1 is current record row)
8385  Y$(X1)=Y$(X1)&SUB$(G$(X),6,4) 'name
8390  Y$(X1)=Y$(X1)&SUB$(X$,1,2)&ENC$(P,2) 'start & end pos
8395  Y$(X1)=Y$(X1)&ENC$(X,2) 'rule
8400  Y$(X1)=Y$(X1)&SUB$(X$,7,4) 'link from above constituent
8405  Y$(X1)=Y$(X1)&SUB$(X1$,7,4) 'link from sub constituent
8410  Y$(X1)=Y$(X1)&ENC$(0,2)&ENC$(0,2) 'link to sister constituent
8415  GOTO 8450 'change previous sister constituent
8449
8450  'update previous sister constituent
8455  IF LEN(Y$(X1))>23 THEN 8480 'this isn't first item at this level
8460  X$=RPL$(X$,ENC$(0,2)&ENC$(0,2),11) 're-write link from above
8480  X2$=SUB$(G$(X),11,3) 'name of next state
8485  IF SUB$(G$(X),1,1)<>" " THEN 8150 'find next state
8490  X=X-1 'get back to the beginning of this net
8495  GOTO 8485
8499
8500  'end
8505  IF X1>2 THEN 8515 'this isn't initial net
8510  IF P+1<=VAL(Y1$(0)) THEN 8600 'fails cos not all data is covered
8515  X1$=SUB$(X$,1,2)&ENC$(P,2) 'start & end pos
8520  X1$=X1$&ENC$(X,2)&ENC$(X1,2) 'rule & current row
8525  X1$=X1$&ENC$(LEN(Y$(X1))-22,2) 'column of current row
8530  X1$=X1$&ENC$(0,2)&ENC$(0,2)&SUB$(G$(X),6,4) 'blanks & last name
8535  LET FNB$=X1$ ')
8540  X$=X1$="" '    > housekeeping
8545  GOTO 8950 '    )
8549
8550  'get next test in this state
8555  X=X+1 'increment pointer
8557  IF X>VAL(G$(0)) THEN 8600 'to backtracking
          - this gets unloaded FRAM
8560  IF SUB$(G$(X),1,5)<>"     " THEN 8600 'to backtracking
8565  GOTO 8200 'to "what kind of test is this"
8599
8600  'backtracking
8605  IF LEN(Y$(X1))=0 THEN 8800 'total failure on this level
8610  're-instate pointers
```

Syntactic analysis - MT21C1

```
8615  X=DEC(SUB$(Y$(X1),LEN(Y$(X1))-13,2)) 'rule
8620  P=DEC(SUB$(Y$(X1),LEN(Y$(X1))-15,2))-1 'position
8625  'if this is second item in net, re-instate pointer to above
8630  IF LEN(Y$(X1))<>22 THEN 8635 'not 2nd item
8632  X$=RPL$(X$,SUB$(Y$(X1),11,4),7)
8635  IF SUB$(Y$(X1),LEN(Y$(X1))-21,1)<"A" THEN 8640
            'go back over units
8637  IF SUB$(Y$(X1),LEN(Y$(X1))-21,1)<="Z" THEN 8700
            'go back over nets
8640  'this is a unit, not a network
8645  Y$(X1)=SEG$(Y$(X1),1,LEN(Y$(X1))-22)
            'lop off 1 constitute record
8660  GOTO 8550 'next test
8699
8700  'backtracking down to individual units
8705  X2$=SUB$(Y$(X1),LEN(Y$(X1))-21,22)
8710  Y$(X1)=SUB$(Y$(X1),1,LEN(Y$(X1))-22)
            'lop off 1 constitute record
8725  X1$=SUB$(X$,1,2)&SUB$(X$,1,2)&SUB$(X$,5,2) 'start & end pos
          & rule
8730  X1$=X1$&ENC$(X1,2)&ENC$(LEN(Y$(X1))+1,2) 'link from above
8735  X1$=X1$&ENC$(0,2)&ENC$(0,2)&SUB$(G$(X),6,4) 'blanks & name
8740  X2$=SUB$(X2$,15,2) 'row which this constituent was linked to
8745  X1$=FNB$(X1$,X2$,0,0) 'call on RTN
8750  GOTO 8375 'evaluate results
8799
8800  'total failure on this level
8805  FOR X2=X1+1 TO VAL(Y$(0)) ')
8810   Y$(X2-1)=Y$(X2) '          > cut out the failed row
8815  NEXT X2 '                   )
8820  Y$(0)=STR$(VAL(Y$(0))-1) '& change overall pointer
8824
8825  'now update all pointers to previously existing rows
8830  FOR X2=1 TO VAL(Y$(0)) 'row
8835   FOR X3=1 TO LEN(Y$(X2)) STEP 22 'constituents
8840    FOR X4=10 TO 14 STEP 4
8845     IF DEC(SUB$(Y$(X2),X3+X4,2))<>X1 THEN 8860
8850     Y$(X2)=RPL$(Y$(X2),ENC$(0,2)&ENC$(0,2),X3+X4)
8855     GOTO 8870
8860     IF DEC(SUB$(Y$(X2),X3+X4,2))<X1 THEN 8870
8865     Y$(X2)=RPL$(Y$(X2),ENC$(DEC(SUB$(Y$(X2),X3+X4,2))-1,2),X3+X4)
8870    NEXT X4
8875   NEXT X3
8880  NEXT X2
8885  LET FNB$="" '  )
8890  X$=X1$=X2$="" ' > housekeeping
8895  GOTO 8950 '    )
8950 FNEND
9000 DEF FNM(X,X$)=POS(SEG$(Y1$(X),1,POS(Y1$(X),"|",1)),X$,1)
9899
9900 DEF FNZ(X$,X,X1) 'errors
9905  NO ERROR
9910  X$=ENC$(X,4)&ENC$(X1,2)&X$
9915  FILE#1:"MT1XD1",2771
9920  READ#1:X1$
```

Syntactic analysis - MT21C1

```
9925  FILE#1:"ERROR",2771
9930  IF LOF(1)>0 THEN 9940
9935  MARGIN#1:44
9940  RESET#1:LOF(1)
9945  WRITE#1:"MT21C1"&SUB$(X1$,5,2)&SUB$(X$,1,MRG(1)-8)
9950  CHAIN "MT11C1,2771"
9955 FNEND
9999 END
```

* * * END OF PRINT * * *

FLOWCHARTS

	Page
Main routine - MT21C1/1	212
Process theme routine - MT21C1/2	213
Dictionary search 1 - MT21C1/3	214
Dictionary search 2 - MT21C1/4	215
Analyse text - MT21C1/5	216
RTN analyser - MT21C1/6	217

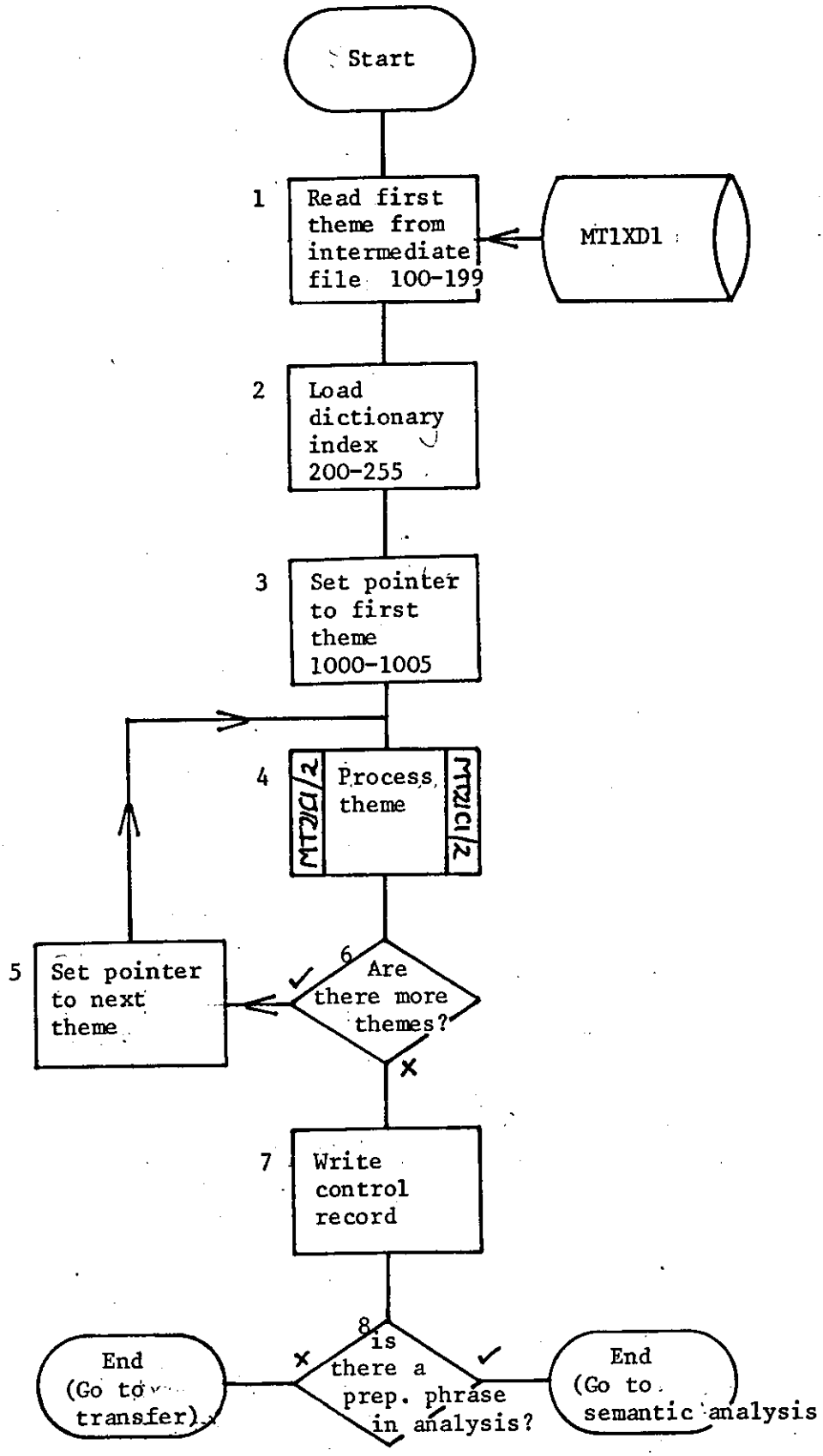

Syntactic analysis / main routine / Sheet 1 of 1

MT21C1/1

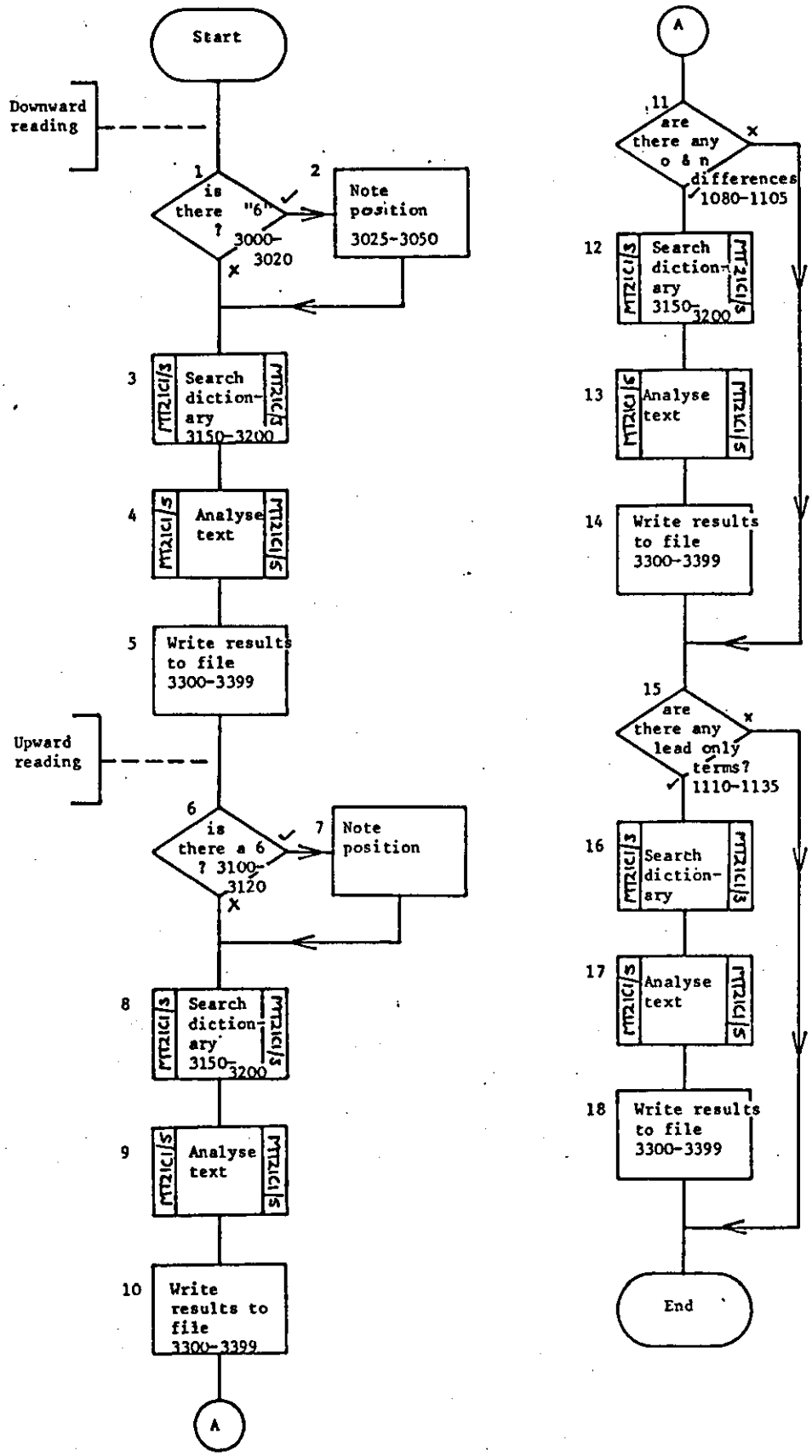

Syntactic analysis / process theme routine / Sheet 1 of 1

MT21C1/2

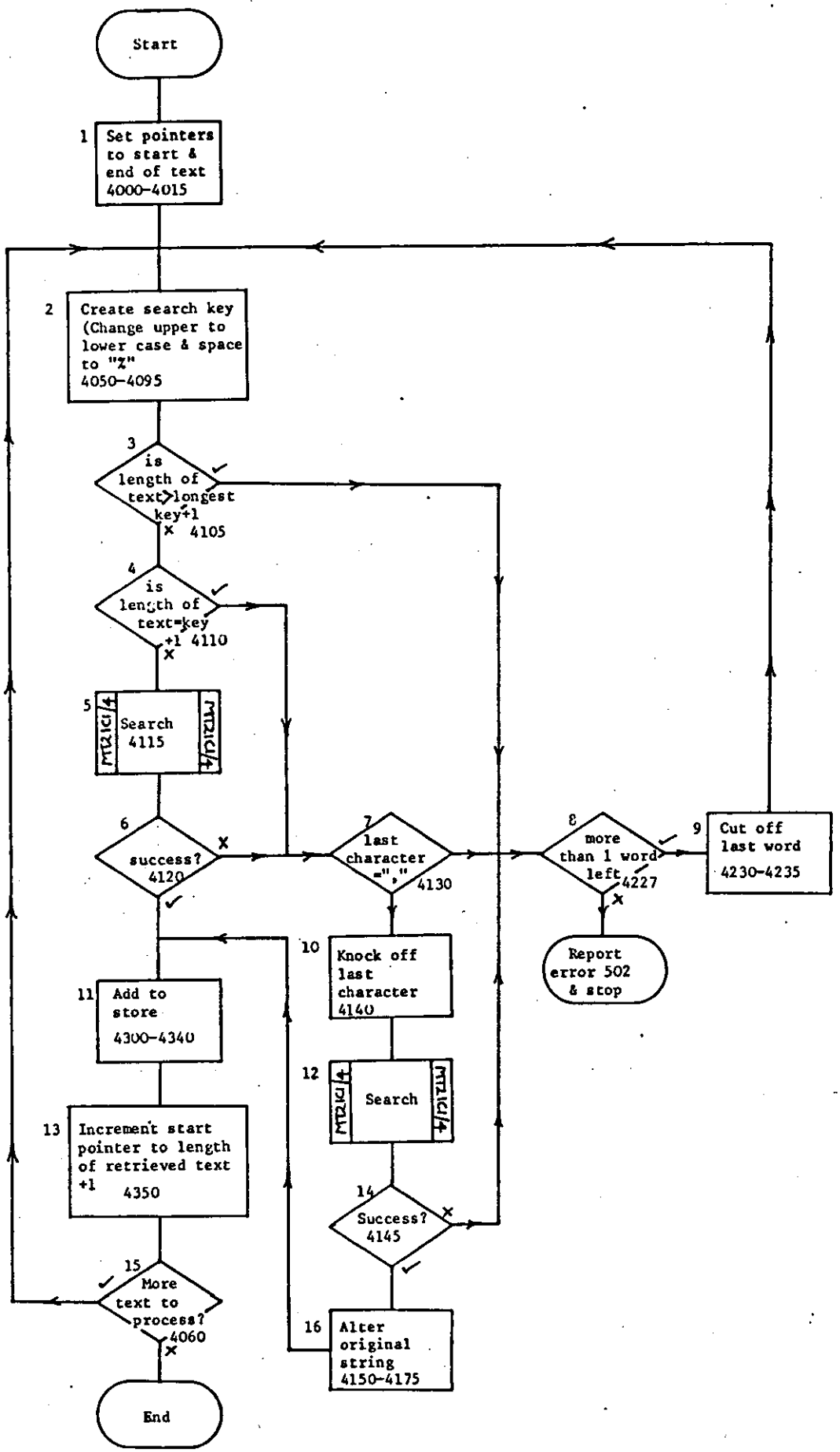

Syntactic analysis / dictionary search 1 / Sheet 1 of 1 / MT21C1/3

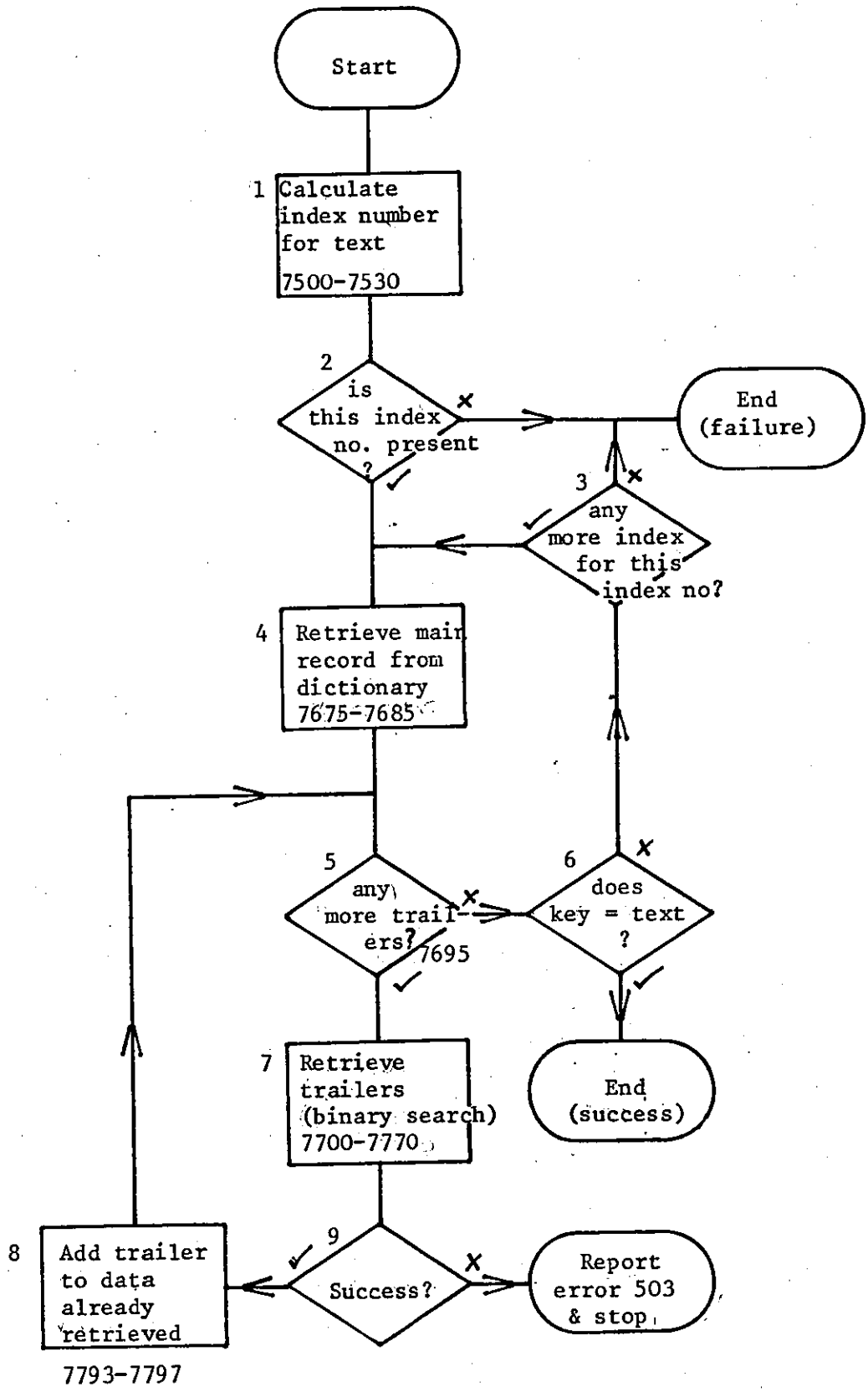

Syntactic analysis / dictionary search 2 / Sheet 1 of 1

MT21C1/4

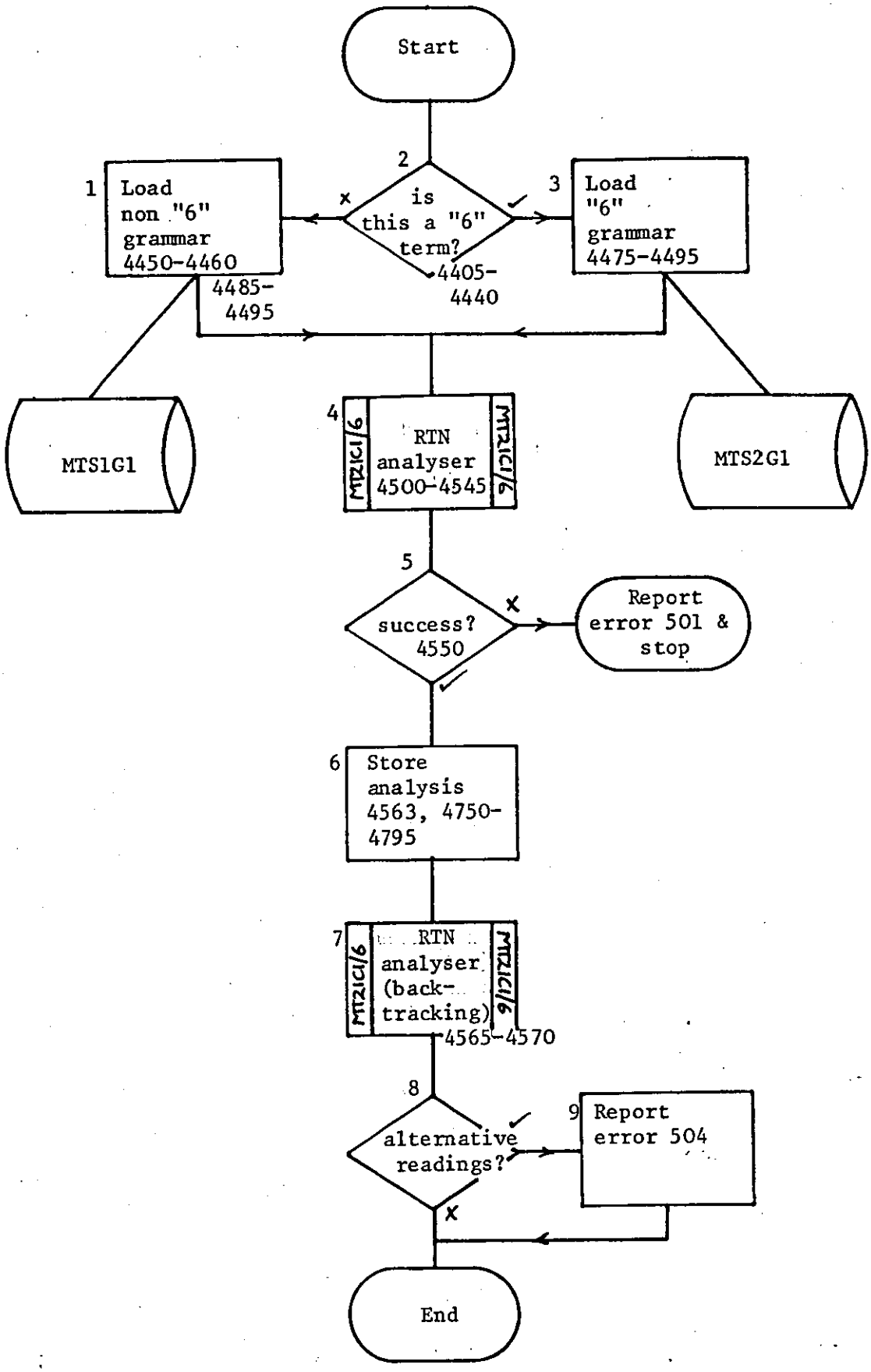

Syntactic analysis / analyse text / Sheet 1 of 1/ MT21C1/5

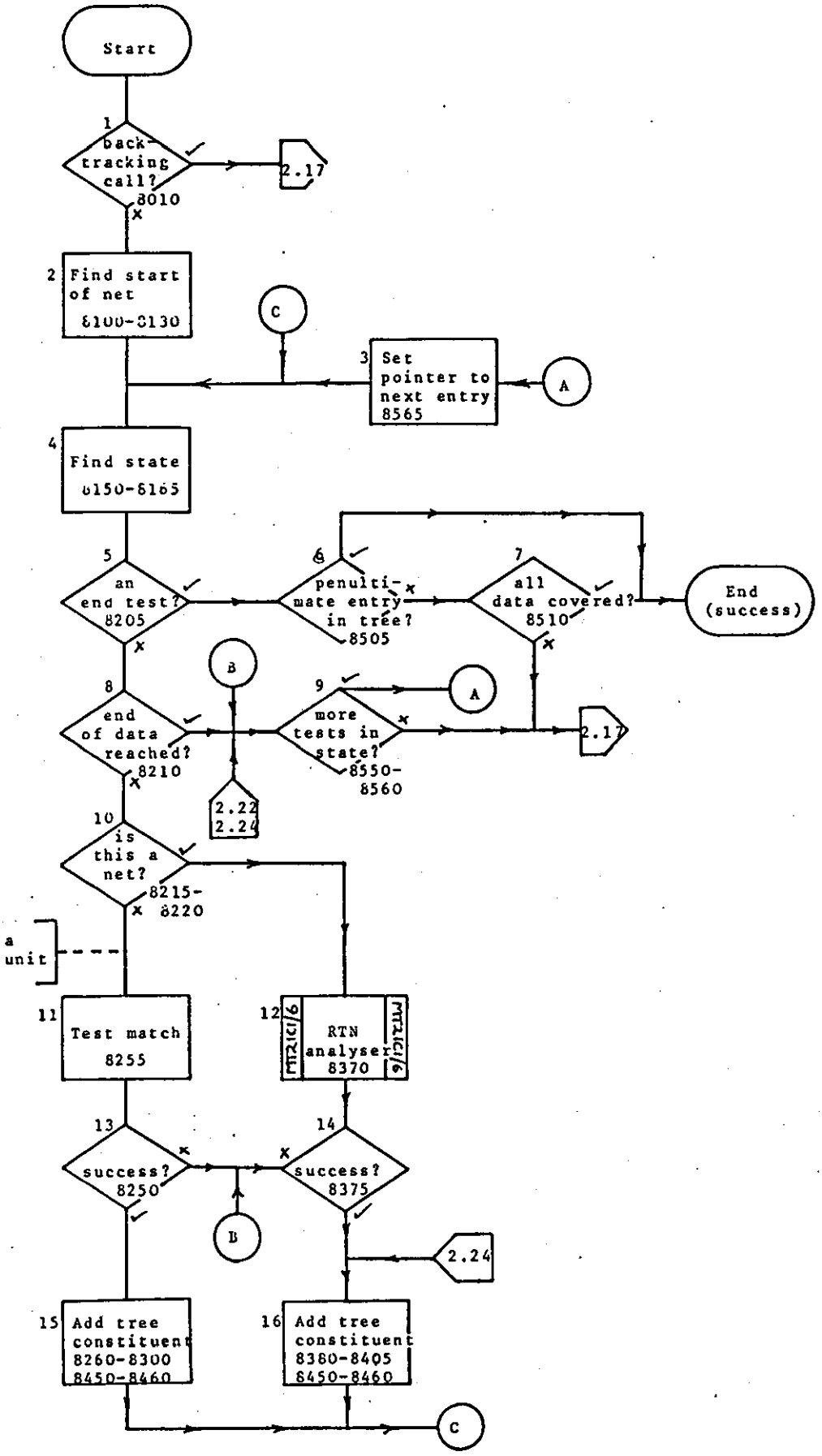

Syntactic analysis / RTN analyser / Sheet 1 of 2 / MT21C1/6

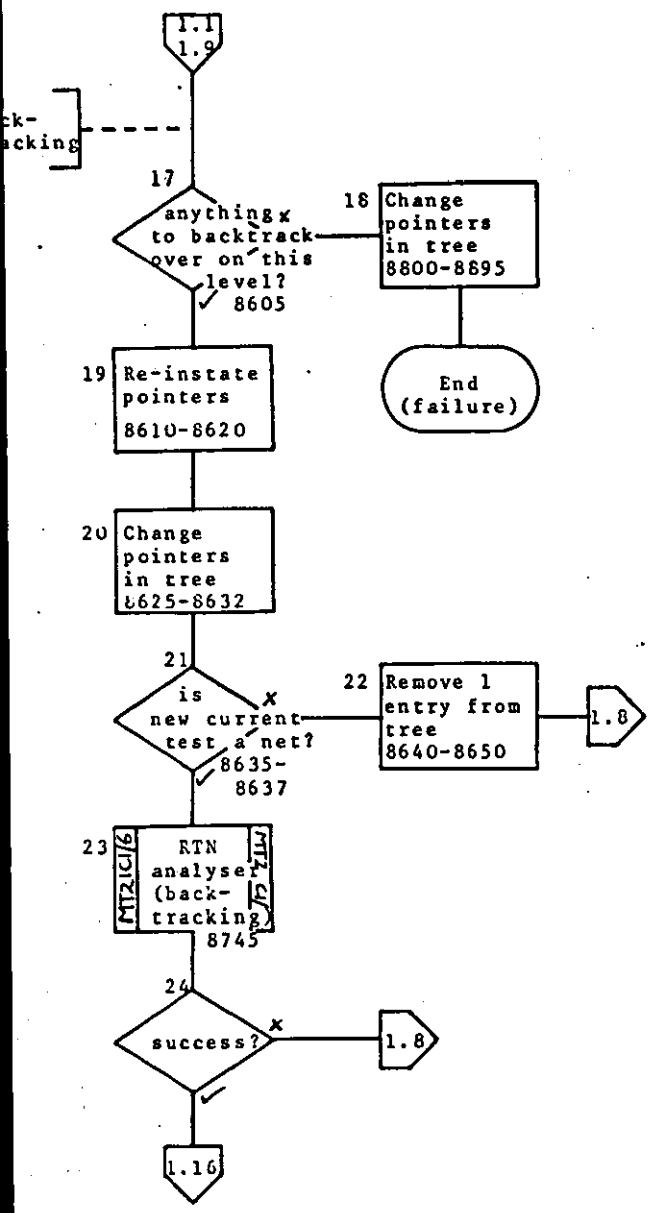

Syntactic analysis / RTN analyser / Sheet 2 of 2 / MT21C1/6

APPENDIX I

PROGRAM MT25C1 (SEMANTIC ANALYSIS 1)

Program listing 220

Flowcharts 229

Semantic analysis 1 - MT25C1

```
1 REM English case analysis 1
2 'P J Hancox - DLIS - LUT
5 PRINT "MT25C1",FSP
7 ON ERROR GOTO 975
10 DIM A$(13),D$(3),Y$(15),Y1$(10),Y2$(15)
15 FILE#1:"MT1XD1",2771
99
100 'reading PRECIS manipulation coding
105 RESET#1:0
110 READ#1:A$(0)
115 FOR A=1 TO 6
120  READ#1:A$(A)
125 NEXT A
130 A=8+LEN(A$(2)) 'this is where 1st section starts
135 FILE#2:"MT2XD1",2771
140 SCRATCH#2
145 MARGIN#2:174
146 A$(0)=SUB$(A$(0),1,8)&ENC$(A-1,2)
147 WRITE#2:SUB$(A$(0),1,10)
149
150 'loading dictionary keys
155 MAT D$=NUL$
160 FILE#1:"MTEAH1",2771 'dict keys
165 RESET#1:0
170 READ#1:D$(0)
175 READ#1:D$(1)
180 READ#1:X$
185 D$(1)=D$(1)&X$
190 READ#1:D$(2) 'chars
195 READ#1:X$
200 D$(3)=D$(3)&X$
205 IF MORE#1 THEN 195
210 FILE#1:"MT1XD1",2771 'analysis dictionary
249
250 'reading records
255 RESET#1:A
260 FOR B=7 TO 13
265  READ#1:A$(B)
270 NEXT B
275 A$(0)=SUB$(A$(0),1,8)&ENC$(DEC(SUB$(A$(0),9,2))+DEC(SUB$(A$(7),1,
        2)),2)
299
300 'getting syntactic parse trailers (if necessary)
310 FOR A=9 TO 13 STEP 3
315  B=DEC(SUB$(A$(A),1,2))
320  IF B=0 THEN 350
325  RESET#1:B
330  READ#1:X$
335  A$(A)=A$(A)&SEG$(X$,3,LEN(X$))
340  B=DEC(SUB$(X$,1,2))
345  GOTO 320
350  A$(A)=SEG$(A$(A),3,LEN(A$(A)))
355 NEXT A
360 FILE#1:"MTEAD1",2771 'Eng analysis dict
399
```

Semantic analysis 1 - MT25C1

```
400 'doing individual trees - downward
401 B=1
402 MAT Y2$=NUL$
403 Y2$(0)="0"
405 A=A1=1 'pointer to 5 & 6 & pointer to text
410 IF SUB$(A$(10),A,1)<>" " THEN 435
415 A=A+1
420 IF A<=LEN(A$(10)) THEN 410
425 A=LEN(A$(8)) 'end
430 GOTO 475
435 'checking with ops
437 IF SUB$(A$(10),A,1)="|" THEN 415
440 IF SUB$(A$(10),A,1)="A" THEN 415
445 IF SUB$(A$(2),UPK(SUB$(A$(10),A,1)),1)="5" THEN 455
450 IF SUB$(A$(2),UPK(SUB$(A$(10),A,1)),1)<>"6" THEN 415
455 A=A-1
474
475 'now analyse matrix
480 D=9 'pointer to syntax data
485 GOSUB 1000 'gets trees
490 GOSUB 2000 'fills matrix
495 A1=A1+C 'C is length of text
500 IF A1>=A THEN 550 'writing down
505 IF SUB$(A$(D),A1,1)<>"|" THEN 485 'not a BS or BI
510 A1=A1+1 'increment pointer
515 GOTO 500 ' & try again
549
550 'writing down
555 GOSUB 850 'write data to file
560 IF A=LEN(A$(10)) THEN 600 'no more to process
565 IF SUB$(A$(2),UPK(SUB$(A$(D+1),A+1,1)),1)="6" THEN 600 'no more
567 IF SUB$(A$(2),UPK(SUB$(A$(D+1),A+1,1)),1)="5" THEN 600 'no more
570 A1=A+1 'pointer to text
575 A=A+2 'pointer to 5 & 6
580 GOTO 410
599
600 'doing individual trees - upwards
605 A=1 'pointer to start of text
610 A1=0 'pointer to end of text
615 'look for 6 op (to ignore)
620 X$="6"
625 A2=A 'work pointer
630 GOSUB 700 'SUBROUTINE find end of this op
635 IF A2=0 THEN 650 'no action needed
640 A=A1=A2 'reset start & end pointers
649
650 'look for 5 (to ignore)
655 X$="5"
660 A2=C=A 'work pointer & results from op 6 routine store
665 GOSUB 700 'SUBROUTINE find end of this op
670 IF A2>0 THEN 680 'action needed & result of op 5 will be> op 6
672 IF C=0 THEN 695 'no action needed
675 A2=C 'set A2 to result of 6 op
680 A=A1=A2 'reset start & end pointers
695 GOTO 1300 'next part of routine
```

Semantic analysis 1 - MT25C1

```
699
700 'SUBROUTINE find end of this op
705 B=0
710 IF OCC(A$(2),X$)=0 THEN 770 'none
720 IF SUB$(A$(13),A,1)="A" THEN 735
725 IF SUB$(A$(13),A,1)="|" THEN 735
730 IF SUB$(A$(13),A,1)<>" " THEN 750
735 A2=A2+1
740 IF A2<=LEN(A$(13)) THEN 720
745 GOTO 770
750 'something found - evaluate
755 IF SUB$(A$(2),UPK(SUB$(A$(13),A2,1)),1)<>X$ THEN 735
760 B=POS(A$(13),"|",A2)+1 'store
765 GOTO 735
770 'end
775 A2=B
780 RETURN
799
800 'writing down
805 GOSUB 850 'writes data to file
810 IF A>=LEN(A$(D+1)) THEN 950 'no more to process - get next item
815 S TO P
849
850 'writes data to file
855 'space to add control records
880 RESET#2:LOF(2)
885 FOR C=0 TO VAL(Y2$(0))
887  X=LEN(Y2$(C))+4
890  Y2$(C)=ENC$(C,2)&ENC$(X,2)&Y2$(C)
895  WRITE#2:SUB$(Y2$(C),1,MRG(2))
900  Y2$(C)=SEG$(Y2$(C),MRG(2)+1,LEN(Y2$(C)))
905  IF LEN(Y2$(C))>0 THEN 895
910 NEXT C
915 MAT Y2$=NUL$
920 Y2$(0)="0"
925 RETURN
950 'get next theme (if any)
955 FILE#1:"MT1XD1",2771
960 A=DEC(SUB$(A$(0),9,2))+1 'pos of next item
965 IF A<DEC(SUB$(A$(0),3,2)) THEN 250 'reading records
967 RESET#2:0
968 WRITE#2:SUB$(A$(0),1,8)&ENC$(1,2)
970 CHAIN "MT27C1,2771" 'semantic analyser
974
975 'errors
980 A=FNZ("",ERL,ERR)
999
1000 'put single structures into Y$() &Y1$()
1005 MAT Y$=NUL$
1010 MAT Y1$=NUL$
1015 Y$(0)=Y1$(0)=""
1020 C=0 'pointer to length of this text
1022 P1=B
1025 X=POS(A$(D),"#|",B+1) 'end of tree & data
1030 X1=POS(SEG$(A$(D),1,X),"##",B+1) 'end of individual row
```

Semantic analysis 1 - MT25C1

```
1035 IF X1>0 THEN 1045
1040 X1=X 'set to end of tree
1045 ON VAL(SUB$(A$(D),B+1,1)) GOTO 1050,1060
1050 Y1$(UPK(SUB$(A$(D),B+2,1)))=SEG$(A$(D),B+3,X1-1)
1055 GOTO 1065
1060 Y$(UPK(SUB$(A$(D),B+2,1)))=SEG$(A$(D),B+3,X1-1)
1065 IF X1=X THEN 1080 'no more
1070 B=X1+1 'reset pointer to tree
1075 GOTO 1030 'next row
1080 B=X+2 'reset pointer to tree
1085 'calculate length of text
1090 FOR X=1 TO VAL(Y1$(0))
1095  C=C+LEN(Y1$(X))+1
1100 NEXT X
1105 'don't subtract 1 from C for last space because of `|'
1110 RETURN
1199
1300 'continuation of upward reading text
1305 D=12
1310 E=LEN(A$(D+1)) 'end of text
1315 'routine to find out where beginning of text is
1320 IF SUB$(A$(D+1),A,1)<>"|" THEN 1330
1325 A=A+1
1330 A1=A
1332 C=OCC(SUB$(A$(D+1),1,A),"|")-OCC(SUB$(A$(D+1),1,A),"||")
1335 IF C>0 THEN 1350
1340 B=1 'structures start at first pos
1345 GOTO 1375 'to GOSUB lines
1350 B=0
1355 FOR C=1 TO C
1360  B=POS(A$(D),"#|",B+1) 'eventually gets pos of structure
1365 NEXT C
1370 B=B+2
1375 GOSUB 1000 'gets trees
1380 GOSUB 2000 'fills matrix
1385 A=A+C 'length of text so far processed
1390 IF A>=E THEN 1450 'change order of interposed ops
1395 IF SUB$(A$(D+1),A,1)<>"|" THEN 1330 'not a BS or BI
1400 A=A+1 'increment pointer
1405 GOTO 1395 '& try again
1449
1450 'change order of interposed ops
1455 IF VAL(Y2$(0))=1 THEN 1500 'don't process
1474
1475 'go through Y2$() to move pqg ops before their main line op
1480 X=1 'start
1485 IF OCC("pqg",SUB$(Y2$(X),1,1))>0 GOSUB 1550
1490 X=X+1
1495 IF X<VAL(Y2$(0)) THEN 1485
1500 GOTO 800
1549
1550 'SUBROUTINE change order
1552 MAT Y$=NUL$\Y$(0)="0"
1555 'find where end of section is
1560 X1=X-1 'start
```

Semantic analysis 1 - MT25C1

```
1565 IF OCC("0123str",SUB$(Y2$(X1+1),1,1))>0 THEN 1600
1570 X1=X1+1
1575 IF X1<>VAL(Y2$(0)) THEN 1565
1580 GOTO 1610 'no main op found
1599
1600 'main op found
1603 X1=X1+1
1605 GOSUB 1700 'finds extent of section & writes to Y$()
1610 'main line op transferred - now look for pqg ops
1615 X1=X1-1
1620 IF X1<X THEN 1650 'end
1625 IF SUB$(Y2$(X1),1,1)=" " THEN 1615
1630 'op found
1635 GOSUB 1700 'finds extent of section & writes to Y$()
1640 GOTO 1615
1649
1650 'copy across
1655 X1=X
1660 X2=0
1665 Y2$(X1+X2)=Y$(X2+1)
1670 X2=X2+1
1675 IF X2<VAL(Y$(0)) THEN 1665
1680 X=X+X2-1
1685 RETURN
1699
1700 'SUBROUTINE find extent of section & write
1705 X2=X1
1710 IF X2=VAL(Y2$(0)) THEN 1730
1715 IF SUB$(Y2$(X2+1),1,1)<>" " THEN 1730
1720 X2=X2+1
1725 GOTO 1710
1730 'extent found - copy
1735 X3=X1
1740 Y$(0)=STR$(VAL(Y$(0))+1)
1745 Y$(VAL(Y$(0)))=Y2$(X3)
1750 X3=X3+1
1755 IF X3<=X2 THEN 1740
1760 RETURN
1999
2000 'SUBROUTINE - fill matrix
2005 X=FNF(2,0)
2010 RETURN
2099
2100 DEF FNF(X,X1)
2105  X1=1 'pointer to brothers in this row
2110  IF DEC(SUB$(Y$(X),X1+14,2))=0 THEN 2150 'a terminal
2115  X2=FNF(DEC(SUB$(Y$(X),X1+14,2)),0) 'recursive call
2120  GOTO 3525 'next brother
2149
2150  'deal with terminals
2155  IF OCC("no  |nn  |np  |ve  |",SUB$(Y$(X),X1,4))=0 THEN 3525
2156  '              to next brother
2199
2200  'case item found
2205  X2=VAL(Y2$(0))+1
```

Semantic analysis 1 - MT25C1

```
2210  X3=DEC(SUB$(Y$(X),X1+4,2))
2215  Y2$(X2)=GAP$(7)&SEG$(Y1$(X3),POS(Y1$(X3),"|",1)+1,LEN(Y1$(X3)))
2220  Y2$(X2)=Y2$(X2)&SUB$(Y$(X),X1,2)
2224
2225  'is there an op below this
2230  X2=0
2235  IF X3=1 THEN 2260 'this isn't first wordTEMP CHANGE!!
2240  FOR X3=1 TO X3-1
2245   X2=X2+LEN(Y1$(X3))-POS(Y1$(X3),"|",1)+1
2250  NEXT X3
2255  ' X2=X2-1 'remove 1 for last space - NOT THOUGHT NEC. COS OF `|'
2260  X2=X2+A1 'add start pos of text
2265  IF SUB$(A$(D+1),X2,1)<>" " THEN 2350 'yes
2270  'no - so look round for another
2275  IF X1=1 THEN 2375 'can't be any more
2280  X3=22
2285  IF SUB$(Y$(X),X1-X3,1)>"Z" THEN 2295
2290  IF SUB$(Y$(X),X1-X3,1)>="A" THEN 2375 'net - so abandon
2295  X2=X2-LEN(Y1$(DEC(SUB$(Y$(X),X1-X3+4,2))))-1
2300  X2=X2+POS(Y1$(DEC(SUB$(Y$(X),X1-X3+4,2))),"|",1)
2305  IF SUB$(A$(D+1),X2,1)="A" THEN 2315 'go back further
2310  IF SUB$(A$(D+1),X2,1)<>" " THEN 2350 'yes
2315  IF X1-X3=1 THEN 2375 'fails
2320  X3=X3+22
2325  GOTO 2285
2330  X2=X1-X3
2349
2350  'op found
2355  X3=VAL(Y2$(0))+1
2360  Y2$(X3)=RPL$(Y2$(X3),SUB$(A$(D+1),X2,1),2)
2365  Y2$(X3)=RPL$(Y2$(X3),SUB$(A$(2),UPK(SUB$(A$(D+1),X2,1)),1),1)
2370  GOTO 2400 'add pos of item
2375  'no op found
2380  X3=VAL(Y2$(0))+1
2385  Y2$(X3)=RPL$(Y2$(X3),PAK$(0,1),2)
2399
2400  'add pos of item
2405  X4=DEC(SUB$(A$(0),9,2))+(D-7)
2410  Y2$(X3)=RPL$(Y2$(X3),ENC$(X4-DEC(SUB$(A$(7),1,2))+1,2),3)
2415  Y2$(X3)=RPL$(Y2$(X3),ENC$(POS(A$(D),SUB$(Y$(X),X1,22),P1),2)
          &" ",5)
2499
2500  'getting links
2505  X$=""
2510  IF OCC("ve  |",SUB$(Y$(X),X1,4))>0 THEN 2650
          'can't have fore links
2515  'go back through parse
2520  X2=X1
2525  IF X2=1 THEN 2555 'can't have a fore link
2530  X2=X2-22
2535  IF OCC("pr  |co  |",SUB$(Y$(X),X2,4))=0 THEN 2525
2540  X$=Y1$(DEC(SUB$(Y$(X),X2+4,2)))
2545  X$=SEG$(X$,POS(X$,"|",1)+1,LEN(X$))
2550  GOTO 2650
2555  'look at nearest 1st cousin to LH uncle
```

Semantic analysis 1 - MT25C1

```
2560  X2=DEC(SUB$(Y$(X),X1+10,2)) 'row
2565  X3=DEC(SUB$(Y$(X),X1+12,2)) 'column
2570  IF X3=1 THEN 2650 'no links possible
2575  X3=X3-22
2580  IF SUB$(Y$(X2),X3,1)>"Z" THEN 2625 'a unit - test
2585  IF SUB$(Y$(X2),X3,1)<"A" THEN 2625 'a unit - test
2590  'a net - look for sons
2595  X2=DEC(SUB$(Y$(X2),X3+14,2))
2600  X3=LEN(Y$(X2))-21
2605  GOTO 2580
2624
2625  'a unit - test
2630  IF OCC("pr  |co  |",SUB$(Y$(X2),X3,4))=0 THEN 2650 'fails
2635  X$=Y1$(DEC(SUB$(Y$(X2),X3+4,2)))
2640  X$=SEG$(X$,POS(X$,"|",1)+1,LEN(X$))
2649
2650  'add to Y2$()
2655  Y2$(VAL(Y2$(0))+1)=Y2$(VAL(Y2$(0))+1)&"$w"&X$
2699
2700  'after link
2705  X$=""
2710  IF DEC(SUB$(Y$(X),X1+4,2))=VAL(Y1$(0)) THEN 2950 'can't be any
            - so
2711  '            add to Y2$()
2715  IF X1+21=LEN(Y$(X)) THEN 2750 'no more in this phrase
2720  'test next item
2725  IF OCC("pr  |co  |",SUB$(Y$(X),X1+22,4))=0 THEN 2875
            'none, go ^ tree
2730  X$=Y1$(DEC(SUB$(Y$(X),X1+26,2)))
2735  X$=SEG$(X$,POS(X$,"|",1)+1,LEN(X$))
2740  GOTO 2950 'add to Y2$()
2749
2750  'chase up tree to get a cousin
2752  X4=X
2753  X3=X1
2755  X2=DEC(SUB$(Y$(X4),X3+10,2)) 'row
2760  X3=DEC(SUB$(Y$(X4),X3+12,2)) 'column
2765  IF X3+21=LEN(Y$(X2)) THEN 2850 'no links possible
2770  X3=X3+22
2775  IF SUB$(Y$(X2),X3,1)>"Z" THEN 2825 'a unit - test
2780  IF SUB$(Y$(X2),X3,1)<"A" THEN 2825 'a unit - test
2785  'find link down
2790  X2=DEC(SUB$(Y$(X2),X3+14,2))
2795  X3=1
2800  GOTO 2775
2825  'test
2830  IF OCC("pr  |co  |",SUB$(Y$(X2),X3,4))=0 THEN 2950
2835  X$=Y1$(DEC(SUB$(Y$(X2),X3+4,2)))
2840  X$=SEG$(X$,POS(X$,"|",1)+1,LEN(X$))
2845  GOTO 2950 'add to Y2$()
2849
2850  'no link possible - so go up tree
2855  IF X2=1 THEN 2950 'end reached - add to Y2$()
2860  X4=X2
2865  GOTO 2755
```

Semantic analysis 1 - MT25C1

```
2874
2875  'next item may be a net - so follow down
2880  X2=X
2885  X3=X1
2890  IF SUB$(Y$(X2),X3,1)>"Z" THEN 2825 'not a net - so test
2895  IF SUB$(Y$(X2),X3,1)<"A" THEN 2825 'not a net - so test
2900  X2=DEC(SUB$(Y$(X2),X3+11,2))
2905  X3=1
2910  GOTO 2890
2949
2950  'add to Y2$()
2955  Y2$(VAL(Y2$(0))+1)=Y2$(VAL(Y2$(0))+1)&"$v"&X$&"$$"
2999
3000  'read dictionary
3005  X$=SEG$(Y2$(VAL(Y2$(0))+1),8,POS(Y2$(VAL(Y2$(0))+1),"$w",8)-3)
3010  X2=0
3015  FOR X3=1 TO LEN(X$)
3020   X2=X2+(POS(D$(2),SUB$(X$,X3,1),1)*DEC(SUB$(D$(1),(X3*2)-1,2)))
3025  NEXT X3
3030  X$=ENC$(MOD(X2,DEC(SUB$(D$(0),1,2))),2)
3199
3200  'search
3205  X2=0 'start of dict-1
3210  X2=POS(D$(3),X$,X2+1)
3215  IF X2=0 THEN 3350 'failure
3220  IF MOD(X2+3,4)<>0 THEN 3210
3224
3225  'read file
3230  RESET#1:DEC(SUB$(D$(3),X2+2,2))
3235  READ#1:X1$
3240  'concatenate trailers (if necessary)
3245  IF DEC(SUB$(X1$,LEN(X1$)-1,2))=0 THEN 3390
3250  X3=0 'search area start
3255  X4=LOF(1) 'search area end
3260  RESET#1:INT((X3+X4)/2)
3265  READ#1:X2$
3270  IF SUB$(X2$,1,2)=SUB$(X1$,LEN(X1$)-1,2) THEN 3375 'success
3275  IF SUB$(X2$,1,2)>SUB$(X1$,LEN(X1$)-1,2) THEN 3300 'in lower half
3280  'in upper half
3285  IF X3=(INT((X3+X4)/2))+1 THEN 3365 'failure to find trailer
3290  X3=(INT((X3+X4)/2))+1
3295  GOTO 3260
3300  'in lower half
3305  IF X4=INT((X3+X4)/2) THEN 3365 'failure to find trailer
3310  X4=INT((X3+X4)/2)
3315  GOTO 3260
3350  'failure - report error
3355  X=512 'no dict entry
3360  GOTO 3370
3365  X=513 'no trailer found
3370  X=FNZ(SEG$(Y3$(X1),8,POS(Y3$(X1),"$w",8)-3),CUL,X)
3374
3375  'whole record present
3380  X1$=SUB$(X1$,1,LEN(X1$)-4)&SEG$(X2$,3,LEN(X2$))
3385  GOTO 3245
```

Semantic analysis 1 - MT25C1

```
3389
3390  'check that this is the correct record
3392  X2$=SEG$(Y2$(VAL(Y2$(0))+1),8,POS(Y2$(VAL(Y2$(0))+1),"$w",8)-3)
          &"#"
3393  IF LEN(X2$)>LEN(X1$) THEN 3210
3394  IF SUB$(X1$,1,LEN(X2$))<>X2$ THEN 3210
3397  X$=SUB$(X1$,1,LEN(X1$)-4)
3398  X1$=X2$=""
3399
3400  'success - now find semantic info
3405  X2=POS(X$,"#$",1) 'field marker to start of syntactic cats
3410  X3=X2+2 'advance pointer to beginning of cats
3412  X2=VAL(Y2$(0))+1
3415  IF SUB$(X$,X3,2)=SUB$(Y2$(X2),POS(Y2$(X2),"$w",8)-2,2) THEN 3450
3420  X3=X3+6 'advance pointer 'cos cat not yet found
3425  IF SUB$(X$,X3,2)<>"$[" THEN 3415 'end of cats not yet reached
3430  X$=SUB$(Y2$(X2),POS(Y2$(X2),"$w",8)-2,2)
          'report cat not found error
3435  X=FNZ(X$&SEG$(Y2$(X2),8,POS(Y2$(X2),"$w",8)-3),CUL,515)
3449
3450  'extract analysis data
3455  X2=DEC(SUB$(X$,X3+2,2)) 'start of data for this syntactic cat
3460  X3=1 'counter to no. of meanings in analysis data
3465  X4=X2 'pointer to end of each meaning packet
3470  X4=POS(X$,"$*",X4+1) 'find end of next meaning packet
3475  IF X3=UPK(SUB$(X$,X2,1)) THEN 3490 'all packets have been found
3480  X3=X3+1 'not all packets have been found, so increment counter
3485  GOTO 3470 '& look again
3490  Y2$(VAL(Y2$(0))+1)=Y2$(VAL(Y2$(0))+1)&"$*"&SEG$(X$,X2,X4+1)
3495   'add analysis data to store
3499
3500  'ending
3505  Y2$(0)=STR$(VAL(Y2$(0))+1)
3524
3525  'increment pointers
3530  X1=X1+22
3535  IF X1<LEN(Y$(X)) THEN 2110
3540  X$=X1$=X2$=""
3545 FNEND
9900 DEF FNZ(X$,X,X1) 'errors
9901  PRINT "ERROR";X1;" AT";X,"(";X$;")"
9905  NO ERROR
9910  X$=ENC$(X,4)&ENC$(X1,2)&X$
9915  FILE#1:"MT1XD1",2771
9920  READ#1:X1$
9925  FILE#1:"ERROR",2771
9930  IF LOF(1)>0 THEN 9940
9935  MARGIN#1:44
9940  RESET#1:LOF(1)
9945  WRITE#1:"MT25C1"&SUB$(X1$,5,2)&SUB$(X$,1,MRG(1)-8)
9950  CHAIN "MT11C1,2771"
9955 FNEND
9999 END
```

* * * END OF PRINT * * *

FLOWCHARTS

	Page
Main routine - MT25C1/1	230
Process downward reading - MT25C1/2	231
Process upward reading - MT25C1/3	232
Load next syntactic tree - MT25C1/4	233
Store case items - MT25C1/5	234
Change order of interposed operators - MT25C1/6	236
Add to temporary store -MT25C1/7	237

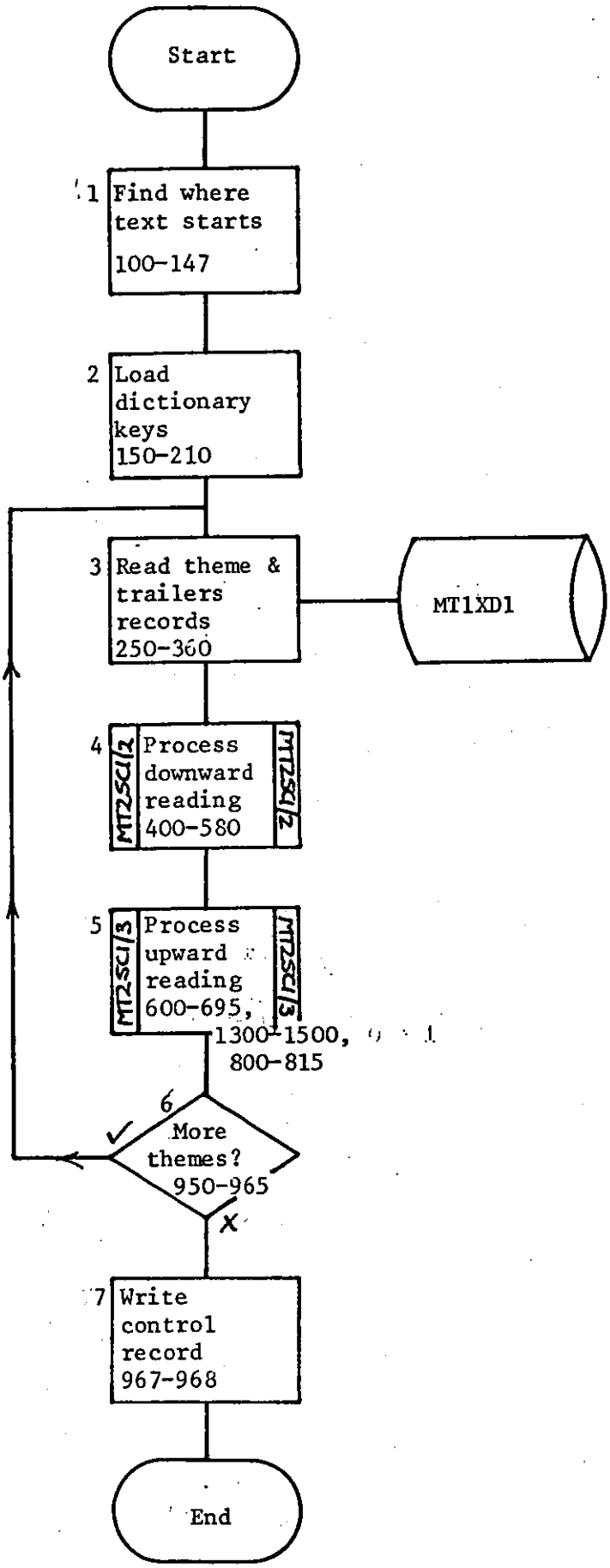

Semantic analysis 1 / main routine / Sheet 1 of 1 MT25C1/1

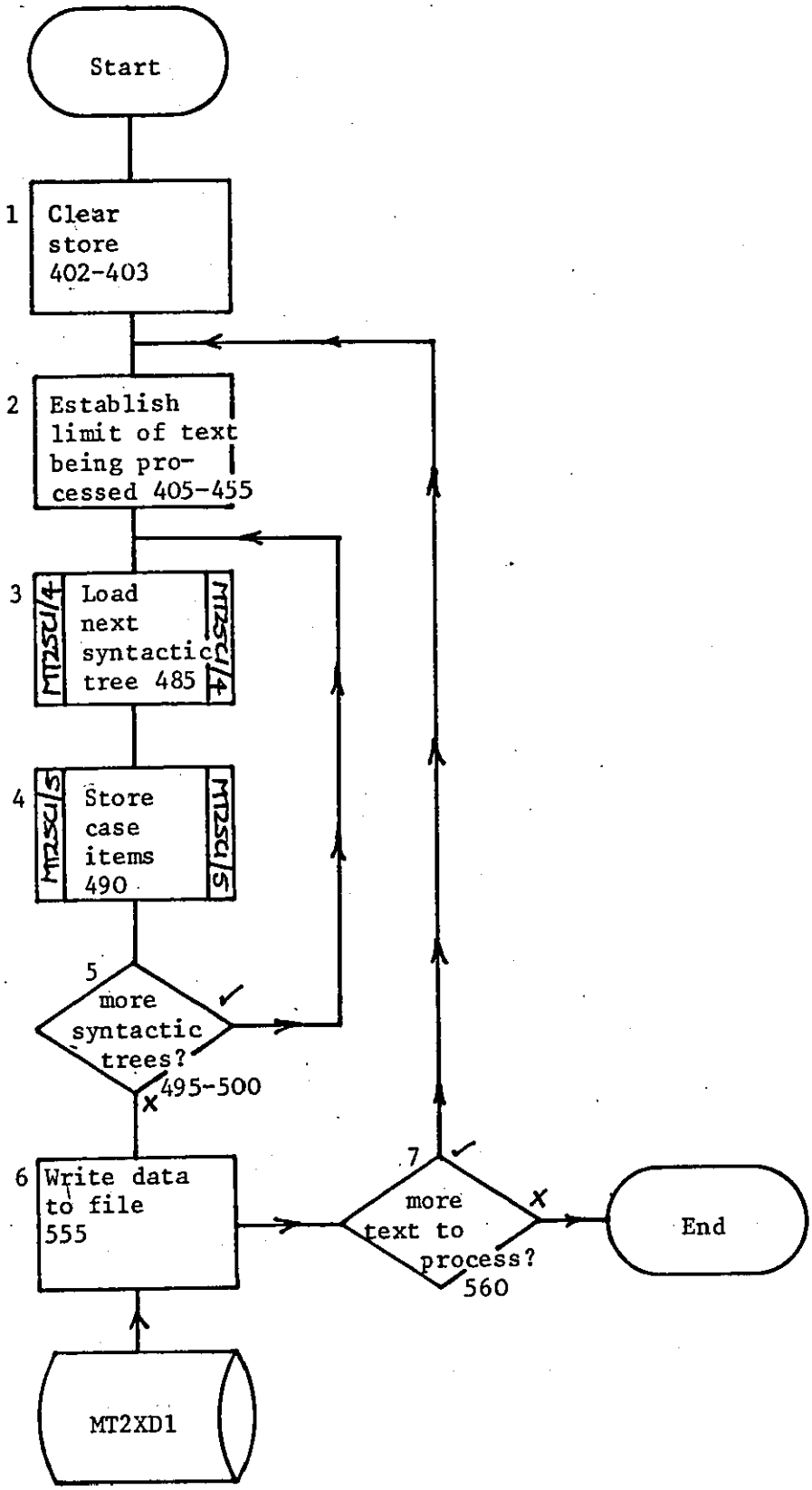

Semantic analysis 1 / process downward reading / Sheet 1 of 1

MT25C1/2

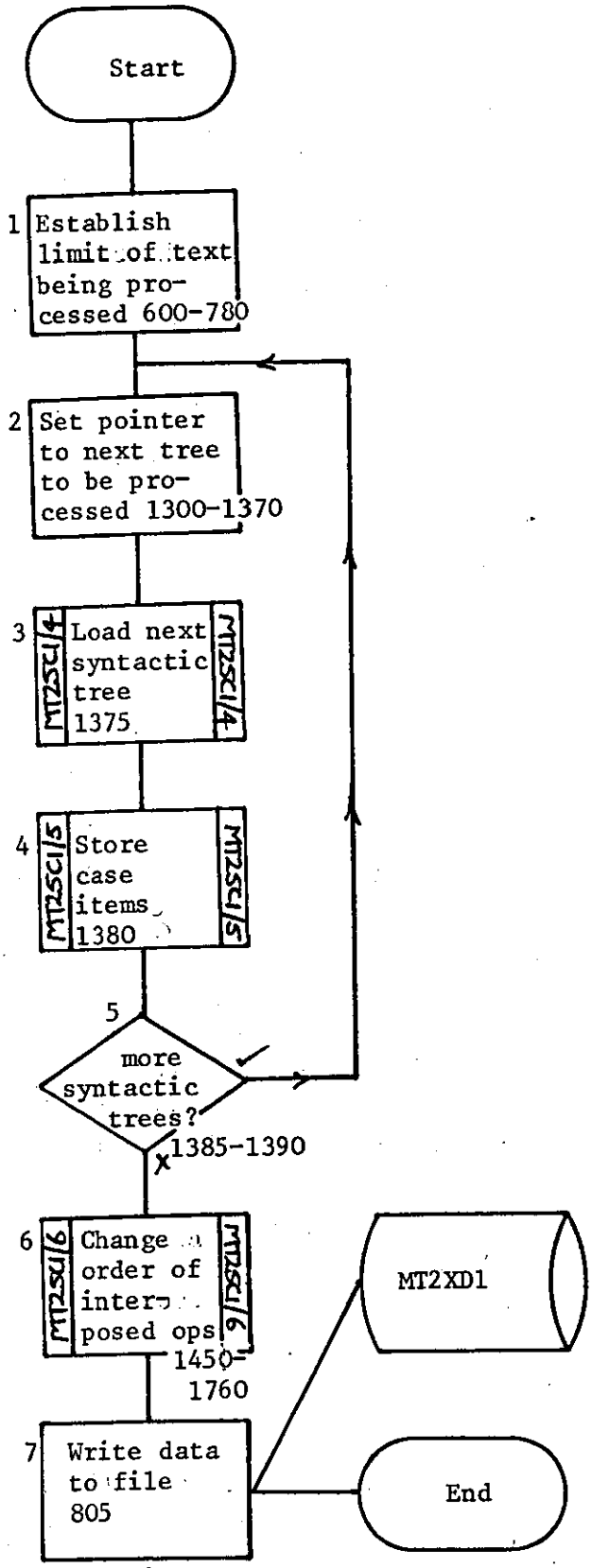

Semantic analysis 1 / process upward reading / Sheet 1 of 1

MT25C1/3

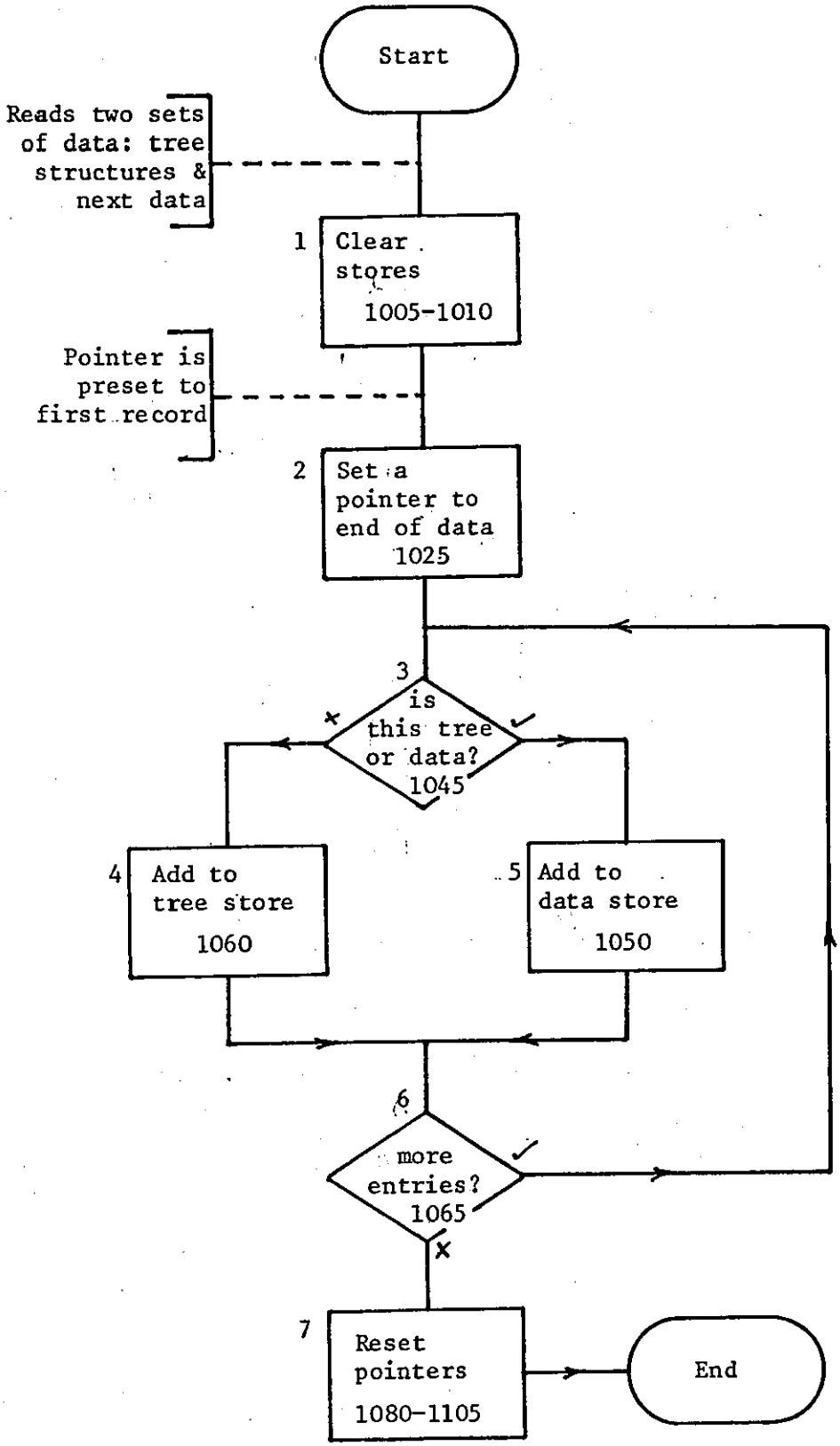

Semantic analysis 1 / load next syntactic tree / Sheet 1 of 1

MT25C1/4

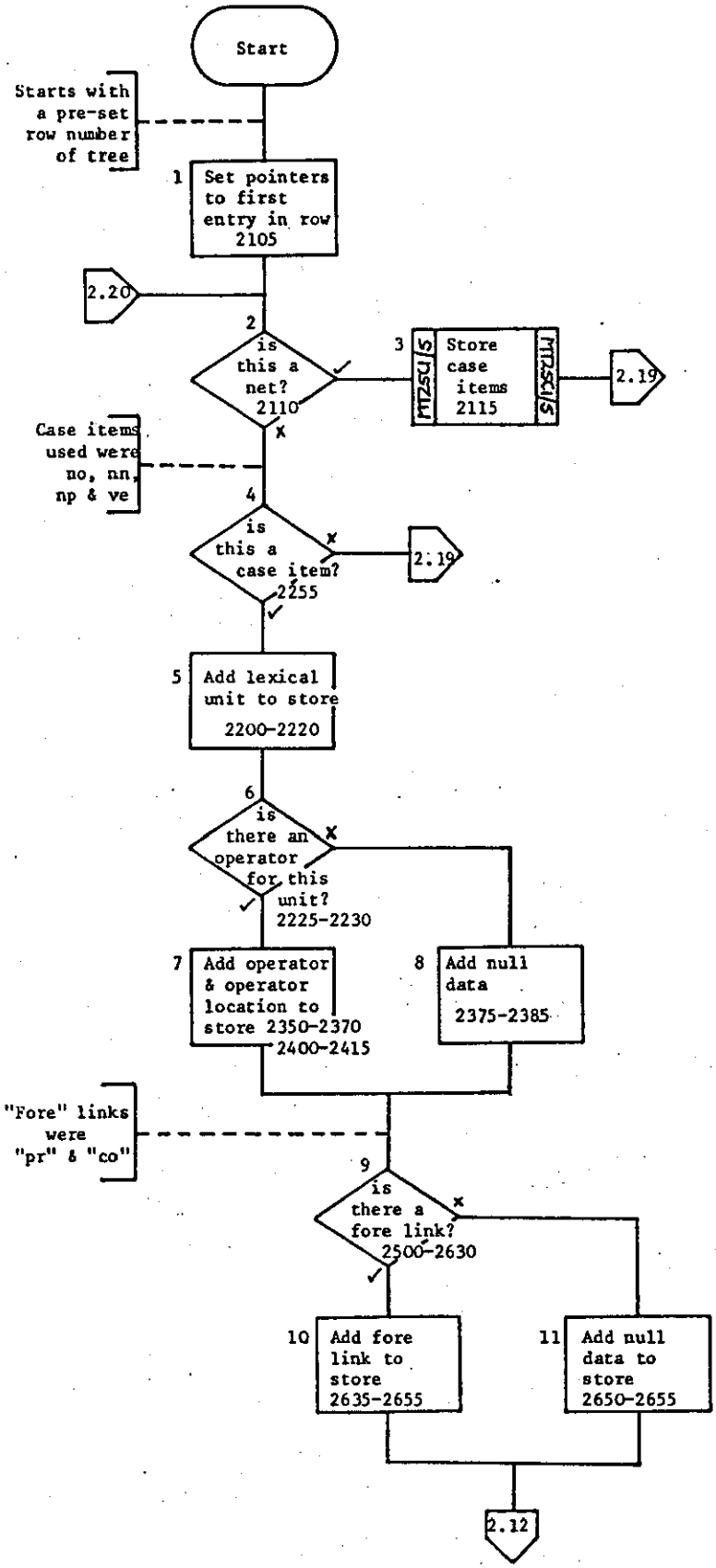

Semantic analysis / store case items /Sheet 1 of 2 / MT25C1/5

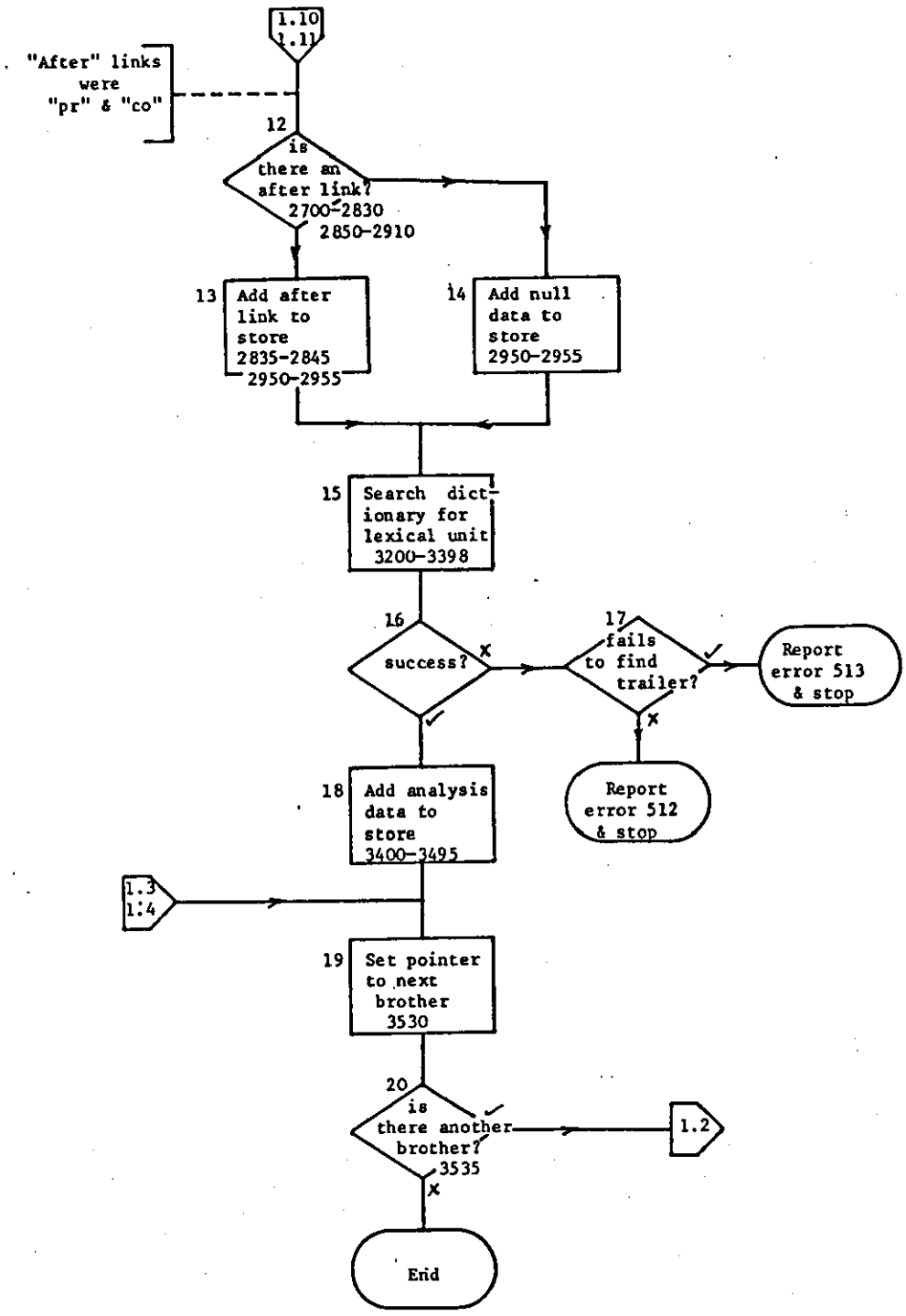

Semantic analysis / store case items /Sheet 2 of 2 MT25C1/5

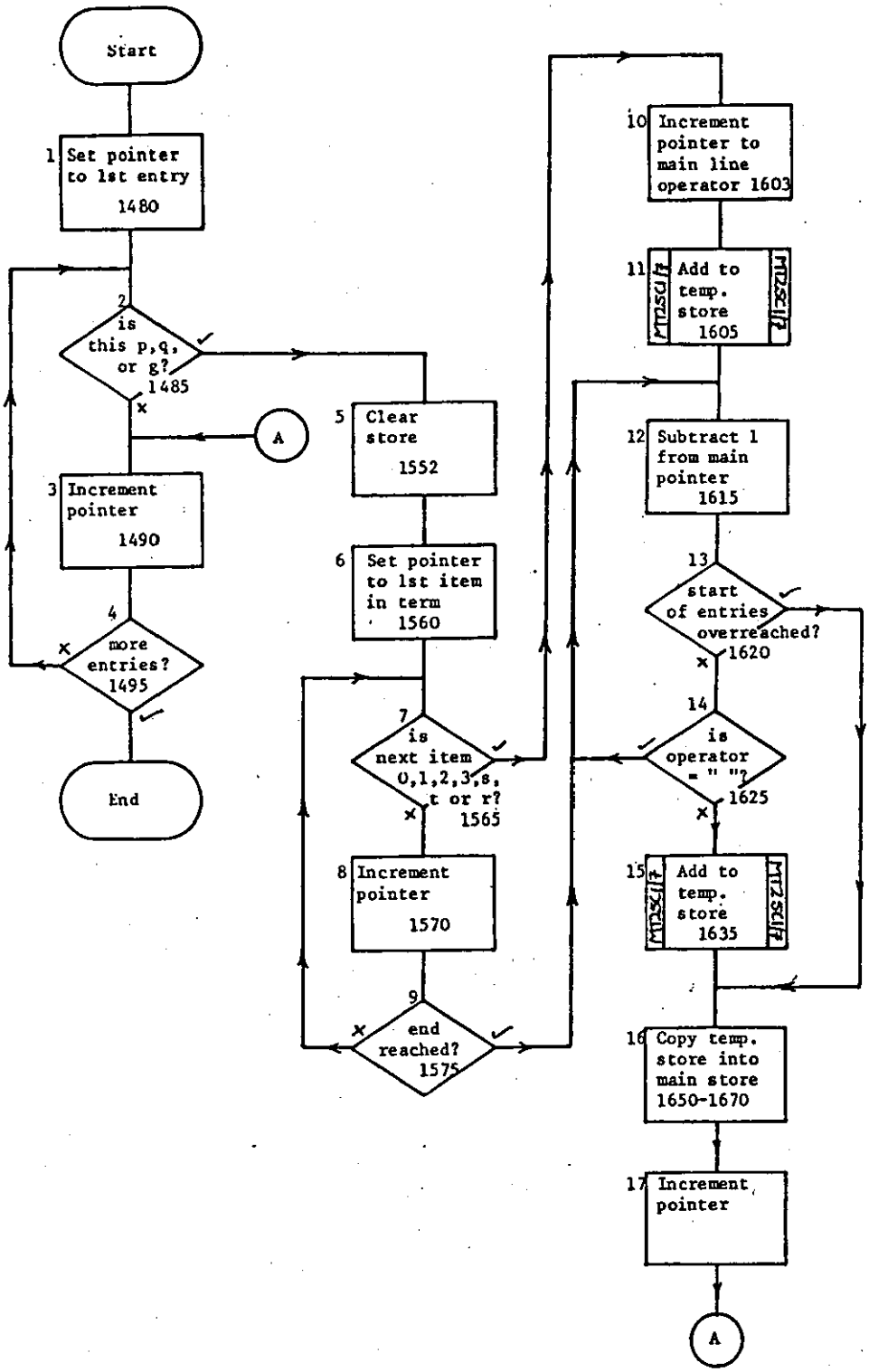

Semantic analysis / change order of interposed operators /

Sheet 1 of 1 / MT25C1/6

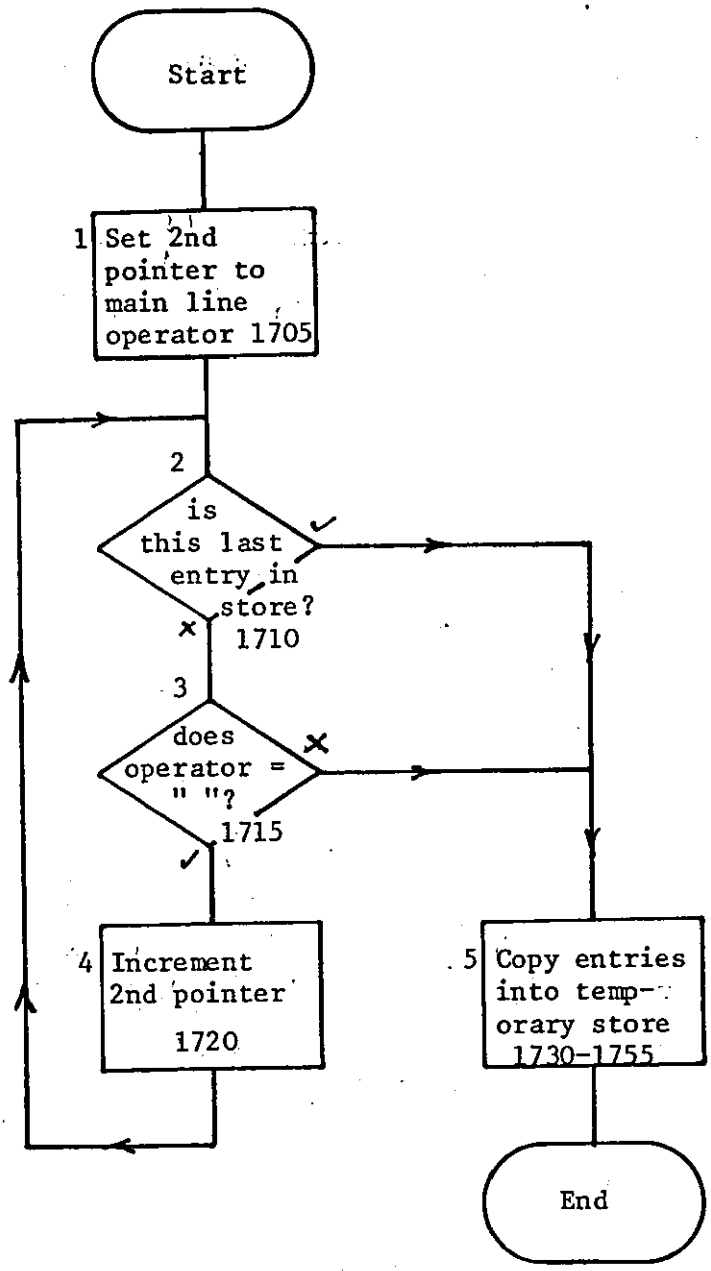

Semantic analysis 1 / add to temporary store / Sheet 1 of 1

MT25C1/7

APPENDIX J

PROGRAM MT27C1 (SEMANTIC ANALYSIS 2)

Program listing 239

Flowcharts 251

Semantic analysis 2 - MT27C1

```
1 REM Semantic analysis 2 - PJ Hancox - DLIS - LUT
5 ON ERROR GOTO 900
10 DIM Y$(14),Y1$(7),Y2$(7),G$(65)
20 PRINT FSP
55 FILE#1:"MT2XD1",2771
60 FILE#2:"MT3XD1",2771
65 SCRATCH#2
70 MARGIN#2:174
75 READ#1:X$
80 C$=ENC$(0,2)
85 C$=C$&C$&SUB$(X$,5,2)&C$&C$
90 WRITE#2:C$
99
100 'main control area
101 PRINT CUL
105 'housekeeping
115 MAT Y1$=NUL$
125 Y1$(0)=""
130 X$="MTC1G1" 'load grammar
135 GOSUB 2000 'load grammar
140 GOSUB 2100 'read data record
149
150 ' * * * 1st parse area * * *
160 GOSUB 300'build control string
165 X1$=FNB$(X$,"",0,0) 'parse
170 IF LEN(X1$)>0 THEN 180
175 X=FNZ("",CUL,511) 'failure to create 1 parse
177 GOTO 640 'get next reading
180 GOSUB 350 'adds top line & prints
185 GOSUB 400 'writes to store
190 GOSUB 450 'lops off constitute for backtracking
195 X1$=FNB$(X1$,X2$,0,0) 'backtracking call on RTN
200 IF LEN(X1$)>0 THEN 180 'more readings
205 GOTO 500 'restructure parse
299
300 'SUB ROUTINE build control record
305 X$=""&ENC$(0,2)
310 X$=X$&X$&X$&X$&X$&X$&X$&"FULL"
330 P=0 'pointer to data
335 MAT Y$=NUL$
340 Y$(0)="1" 'where pointer writes its first record
345 RETURN
349
350 'SUBROUTINE add top line & print
355 Y$(1)="FULL"&ENC$(1,2)&ENC$(VAL(Y1$(0)),2)&ENC$(0,2)
360 Y$(1)=Y$(1)&ENC$(0,2)&ENC$(0,2)&ENC$(2,2)&ENC$(1,2)&ENC$(0,2)
          &ENC$(0,2)
370 RETURN
399
400 'SUBROUTINE write parse 1 records to store
410 RESET#2:LOF(2)
415 FOR X2=0 TO VAL(Y$(0))
420  WRITE#2:Y$(X2)
425 NEXT X2
430 FOR X2=0 TO VAL(Y1$(0))
```

Semantic analysis 2 - MT27C1

```
435  WRITE#2:Y1$(X2)
440 NEXT X2
445 C$=RPL$(C$,ENC$(LOF(2)-1,2),1)
447 RETURN
449
450 'SUBROUTINE lops off 1 constitute for backtracking
455 X2$=SUB$(Y$(1),LEN(Y$(1))-21,22)
460 Y$(1)=SUB$(Y$(1),1,LEN(Y$(1))-22) 'lop off 1 contitute record
475 X1$=SUB$(RPL$(X$,SUB$(X$,1,2),3),1,6)&ENC$(X1,2)
480 X1$=X1$&ENC$(LEN(Y$(X1))+1,2)&ENC$(0,2)&ENC$(0,2)&SUB$(G$(X),6,4)
490 X2$=SUB$(X2$,15,2) 'row which this constitute was linked to
495 RETURN
499
500 ' * * * 2nd parse area * * *
503 X$="MTC2G1"
505 GOSUB 2000 'load grammar
510 X=DEC(SUB$(C$,3,2))+1 'where next structure is
512 RESET#2:X
513 READ#2:Y$(0)
515 FOR X2=X+1 TO X+VAL(Y$(0))
517  READ#2:Y$(X2-X)
518 NEXT X2
520 X=X+VAL(Y$(0))+1
522 READ#2:Y2$(0)
525 FOR X2=X+1 TO X+VAL(Y2$(0))
530  READ#2:Y2$(X2-X)
533 NEXT X2
539 MAT Y1$=NUL$\Y1$(0)="0"
540 X1=FND(2,1,0,0) 'extracts PREDs & ARGs
541 IF X1=0 THEN 570
545 MAT Y2$=NUL$
547 Y2$(0)=ENC$(0,2)&ENC$(0,2)
549
550 ' * * * 2nd parse * * *
555 GOSUB 300 'build control string
557 X1$=FNB$(X$,"",0,0) 'parse
560 IF LEN(X1$)>0 THEN 600 'accept this parse
570 C$=RPL$(C$,ENC$(LOC(2)-1,2),3)
572 IF SUB$(C$,1,2)<>SUB$(C$,3,2) THEN 510 'get next 1st parse
573 IF DEC(SUB$(C$,7,2))>0 THEN 590
          'constraint can't be relaxed further
575 C$=RPL$(C$,ENC$(1,2),7)
577 C$=RPL$(C$,SUB$(C$,9,2),3)
585 GOTO 510
590 X=FNZ("",CUL,511) 'failure to create 1 parse
595 GOTO 640 'get next reading
599
600 'write successful parse to store
605 GOSUB 350 'add top line
608 RESET#2:LOF(2)
610 FOR X=0 TO VAL(Y$(0))
615  WRITE#2:Y$(X)
620 NEXT X
625 FOR X=0 TO VAL(Y1$(0))
630  WRITE#2:Y1$(X)
```

Semantic analysis 2 - MT27C1

```
635 NEXT X
637 WRITE#2:ENC$(0,2)&C$
638 GOTO 642
640 RESET#2:LOF(2)
641 WRITE#2:ENC$(1,2)&C$
642 C$=ENC$(LOF(2)-1,2)&SUB$(C$,5,2)
645 C$=SUB$(C$,1,2)&C$&ENC$(0,2)&SUB$(C$,1,2)
649
650 'get next set of data
655 FILE#1:"MT2XD1",2771
660 READ#1:X$
665 IF DEC(SUB$(X$,9,2))>=LOF(1)-1 THEN 700 'done
685 C$=RPL$(C$,ENC$(0,2),7)
690 GOTO 100
699
700 'done
705 RESET#2:0
710 WRITE#2:C$
715 CHAIN "MT29C1,2771"
899
900 'reporting program errors
905 NO ERROR
910 X=FNZ("",ERL,ERR) 'error reporting
999
2000 'SUBROUTINE load grammar
2005 MAT G$=NUL$
2010 FILE#1:X$,2771
2015 READ#1:G$(LOC(1))
2020 IF MORE#1 THEN 2015
2090 RETURN
2100 'SUBROUTINE read data
2103 X1$=""
2105 FILE#1:"MT2XD1",2771
2110 RESET#1:0
2115 READ#1:X$
2130 X=DEC(SUB$(X$,9,2)) 'start of next set of data
2135 RESET#1:X
2140 READ#1:X$
2145 X1$=X1$&X$
2150 IF DEC(SUB$(X1$,3,2))>LEN(X1$) THEN 2140
2155 Y1$(DEC(SUB$(X1$,1,2)))=SEG$(X1$,5,LEN(X1$))
2160 IF DEC(SUB$(X1$,1,2))=VAL(Y1$(0)) THEN 2175
2165 X$=X1$=""
2170 GOTO 2140
2175 X=LOC(1)
2180 RESET#1:0
2185 READ#1:X$
2190 RESET#1:0
2195 WRITE#1:RPL$(X$,ENC$(X,2),9)
2200 X$=X1$=""
2205 RETURN
2299
2400 DEF FND(X,X1,X2,X3) 'chases through tree for 2nd parse items
2405  'housekeeping
2415  ON POS("LM",SUB$(Y$(X),X1+3,1),1)+1 GOTO 2425,2700,2450
```

Semantic analysis 2 - MT27C1

```
2425  X1=X1+22
2430  IF X1<LEN(Y$(X)) THEN 2415
2435  GOTO 2900 'end cos no more on this level
2449
2450  'FRAMe
2455  X2=DEC(SUB$(Y$(X),X1+14,2)) 'row of constituents
2460  X3=1
2465  'strategy - look for PRED, then ARGs and FRAMs
2470  'look for PRED
2475  IF SUB$(Y$(X2),X3+3,1)="D" THEN 2500
2480  X3=X3+22
2485  IF X3<LEN(Y$(X2)) THEN 2475
2490  GOTO 2915 'fails
2499
2500  'PRED found
2505  GOSUB 2750 'writes data to Y1$()
2510  IF P=99 THEN 2915
2549
2550  'now look for ARGs & FRAMs
2555  X3=1
2560  IF SUB$(Y$(X2),X3,4)="ARG " THEN 2600
2565  IF SUB$(Y$(X2),X3,2)="FR" THEN 2650
2570  X3=X3+22
2575  IF X3<LEN(Y$(X2)) THEN 2560
2580  GOTO 2425 'end of this net
2599
2600  'ARG found
2605  GOSUB 2750 'write data to Y1$()
2610  IF P=99 THEN 2915
2615  GOTO 2570 'look for next item
2649
2650  'FRAM found
2655  X4=FND(X2,1,0,0) 'processes FRAMe
2660  IF X4=0 THEN 2915
2665  GOTO 2570 'look for next item
2699
2700  'ARGL found
2705  X2=X ' ) store values so
2710  X3=X1 ') can use SUBROUTINE
2715  GOSUB 2750
2720  IF P=99 THEN 2915
2725  GOTO 2425 'end of this "net"
2749
2750  'SUBROUTINE
2755  X4=VAL(Y1$(0))+1
2760  Y1$(X4)=Y2$(DEC(SUB$(Y$(X2),X3+6,2)))
2765  Y1$(X4)=RPL$(Y1$(X4),SUB$(Y$(X2),X3,4)&PAK$(X2,1)&ENC$(X3,2),1)
2770  'find constituent
2775  X4=X2
2780  X5=X3-1
2785  X$=SUB$(Y$(X4),X5+15,4)
2790  X4=DEC(SUB$(X$,1,2))
2795  X5=DEC(SUB$(X$,3,2))
2800  IF X4>0 THEN 2785
2810  X$=SEG$(Y2$(X5),POS(Y2$(X5),"$w",8),POS(Y2$(X5),"$v",8)-1)
```

Semantic analysis 2 - MT27C1

```
2820  X4=VAL(Y1$(0))+1
2825  X5=POS(Y1$(X4),"$w",8)-1\P=POS(Y1$(X4),"$v",8)
2830  Y1$(X4)=SUB$(Y1$(X4),1,X5)&X$&SEG$(Y1$(X4),P,LEN(Y1$(X4)))
2835  FOR X5=1 TO 4
2840   P=POS("ABCDEFGHIJKLMNOPQRSTUVWXYZ",SUB$(Y1$(X4),X5,1),1)
2845   IF P=0 THEN 2850\Y1$(X4)=RPL$(Y1$(X4),CHR$(P+96),X5)
2850  NEXT X5
2855  'delete unnecessary case info
2860  X5=POS(Y1$(X4),"$*",8)+4
2865  IF POS("ap",SUB$(Y1$(X4),1,1),1)=VAL(SUB$(Y1$(X4),X5,1))
          THEN 2885 'ok
2870  X5=POS(Y1$(X4),"$*",X5+1)+3
2875  IF X5>3 THEN 2865
2880  P=99\RETURN
2885  'semantic packet found - cut out irrelevant data
2887  Y1$(X4)=SUB$(Y1$(X4),1,POS(Y1$(X4),"$*",X5+1)+1)
2890  P=POS(Y1$(X4),"$*",8)+1
2892  Y1$(X4)=SUB$(Y1$(X4),1,P)&SEG$(Y1$(X4),X5,LEN(Y1$(X4)))
2895  Y1$(0)=STR$(X4)
2897  RETURN
2899
2900  'ending
2905  LET FND=1
2910  GOTO 2920
2915  LET FND=0
2920 FNEND
2999
6000 DEF FNE(X,X1,X2,X$,X1$) 'manipulating grammar
6010  'find section
6015  IF LEN(X$)>0 THEN 6030 'inverse
6020  ON POS("LEW",SUB$(X1$,15,1),1) THEN 6100,6150,6200
6025
6030  ON POS("LEW",SUB$(X1$,15,1),1) THEN 6300,6370,6400
6099
6100  'LOAD(FRAM) load frame as grammar
6105  GOSUB 6500 'SUB 1 store current grammar
6110  'add to store
6115  X3=DEC(SUB$(Y2$(0),1,2))+1
6120  Y2$(X3)=PAK$(X,1)&PAK$(P,1)&SUB$(Y2$(0),3,2)
6125  Y2$(X3)=Y2$(X3)&SEG$(Y1$(P),POS(Y1$(P),"$*",8)+2,LEN(Y1$(P)))
6130  Y$(X1)=RPL$(Y$(X1),SUB$(Y2$(0),3,2),X2)
          'record previous state of store
6135  Y2$(0)=ENC$(X3,2)&ENC$(X3,2)
6140  GOSUB 6600 'SUB 3 load grammar
6145  GOTO 6950
6149
6150  'ERAS(FRAM)
6155  GOSUB 6500 'SUB 1 store current grammar
6160  Y2$(X4)=RPL$(Y2$(X4),PAK$(X,1)&PAK$(P,1),1)
6165  Y$(X1)=RPL$(Y$(X1),SUB$(Y2$(0),3,2),X2)
6170  Y2$(0)=RPL$(Y2$(0),SUB$(Y2$(X4),3,2),3)
6175  GOSUB 6800 'SUB 4 reload previous grammar
6180  GOTO 6950 'end
6199
6200  'WRIT(D ON E) state done
```

Semantic analysis 2 - MT27C1

```
6205  X$=SUB$(G$(X),7,1)
6210  X2=X
6215  IF SUB$(G$(X2-1),6,1)="-" THEN 6235
6220  IF SUB$(G$(X2-1),7,1)<>X$ THEN 6235
6225  X2=X2-1
6230  GOTO 6215
6235  IF SUB$(G$(X2),6,1)="-" THEN 6260
6240  IF SUB$(G$(X2),7,1)<>X$ THEN 6260
6245  G$(X2)=SUB$(G$(X2),1,5)&"-"&SUB$(G$(X2),6,4)
          &SEG$(G$(X2),11,LEN(G$(X2)))
6250  X2=X2+1
6255  IF X2<=VAL(G$(0)) THEN 6235
6260  GOTO 6950 'end
6299
6300  'undo a frame (ie inverse of LOAD(FRAM))
6305  GOSUB 6500 'SUB 1 store current grammar
6310  X3=0 'counter for closing up store
6315  X=1
6320  IF X<>X4 THEN 6330
6325  X3=1
6330  Y2$(X)=Y2$(X+X3)
6335  X=X+1
6340  IF X<=DEC(SUB$(Y2$(0),1,2)) THEN 6320
6345  Y2$(0)=ENC$(DEC(SUB$(Y2$(0),1,2))-1,2)&SUB$(Y$(X1),X2,2)
6350  GOSUB 6800 'SUB 4 reload old grammar
6355  GOTO 6950 'end
6369
6370  'get back into frame - inverse of ERAS(FRAM)
6375  GOSUB 6500 'SUB 1 store current grammar
6380  Y2$(0)=RPL$(Y2$(0),SUB$(Y$(X1),X2,2),3)
6385  GOSUB 6800 'SUB 4 reload previous grammar
6390  GOTO 6950 'end
6399
6400  'undo a deleted WRIT(D ON E)
6405  X$=SUB$(G$(X),8,1)
6410  X2=X
6415  IF SUB$(G$(X2-1),6,1)<>"-" THEN 6425
6417  IF SUB$(G$(X2-1),8,1)<>X$ THEN 6425
6420  X2=X2-1
6422  GOTO 6415
6425  IF SUB$(G$(X2),8,1)<>X$ THEN 6445
6427  IF SUB$(G$(X2),6,1)<>"-" THEN 6445
6430  G$(X2)=SUB$(G$(X2),1,5)&SUB$(G$(X2),7,4)&" "
          &SEG$(G$(X2),11,LEN(G$(X2)))
6435  X2=X2+1
6440  IF X2<=VAL(G$(0)) THEN 6425
6445  GOTO 6950 'end
6499
6500  'SUBROUTINE 1 find start of S2
6505  X4=DEC(SUB$(Y2$(0),3,2))
6510  IF X4=0 RETURN 'no current grammar
6515  X3=5 'start of grammar
6520  IF G$(X3)="FRAM" THEN 6535
6525  X3=X3+1
6530  GOTO 6520
```

Semantic analysis 2 - MT27C1

```
6535  IF SUB$(G$(X3),1,4)=" S2 " THEN 6550
6540  X3=X3+1
6545  GOTO 6535
6549
6550  '& store current contents of grammar
6555  Y2$(X4)=SUB$(Y2$(X4),1,POS(Y2$(X4),"$*",5)+1)
6560  FOR X5=X3 TO VAL(G$(0))
6565   Y2$(X4)=Y2$(X4)&ENC$(X5,2)&G$(X5)&"|"
6570   G$(X5)=""
6575  NEXT X5
6580  G$(0)=STR$(X3-1)
6585  RETURN
6599
6600  'SUBROUTINE 3 load new grammar
6602  X4=DEC(SUB$(Y2$(0),3,2))
6603  IF X4=0 RETURN
6605  X$=" S2  a    S2  WRIT(D ON E)" 'state
6610  X3=8 'start of first state in frame
6615  X$=RPL$(X$,SUB$(Y2$(X4),X3,1),7)
6620  IF OCC(SUB$(Y2$(X4),X3+1,8),"0")=8 THEN 6640 'blocked
6625  GOSUB 6850 'SUB 2 add to G$(0)
6630  X$=RPL$(X$,"a",6)
6635  G$(VAL(G$(0)))=X$
6640  X$=RPL$(X$,"     P",1)
6645  IF SUB$(Y2$(X4),X3+9,1)="0" THEN 6660 'no pred
6650  GOSUB 6850 'SUB 2 add to G$(0)
6655  G$(VAL(G$(0)))=X$
6660  X3=POS(Y2$(X4),"/",X3+1)
6665  IF SUB$(Y2$(X4),X3+1,2)="$*" THEN 6685
6670  IF SUB$(Y2$(X4),X3+1,1)<>"[" THEN 6620
6675  X3=X3+2
6680  GOTO 6615
6685  GOSUB 6850 'SUB 2 add to G$(0)
6690  G$(VAL(G$(0)))="     *END"
6695  'end of frame - write subnets if necessary
6700  X2=5
6705  IF SUB$(G$(X2),1,4)="FRAM" THEN 6720
6710  X2=X2+1
6715  GOTO 6705
6720  FOR X2=X2 TO VAL(G$(0))
6725   IF SUB$(G$(X2),6,1)>"Z" THEN 6755
6730   IF SUB$(G$(X2),6,1)<"A" THEN 6755
6735   G$(VAL(G$(0))+1)=SUB$(G$(X2),6,4)
6740   G$(VAL(G$(0))+2)=" S1  FRAM S2  ERAS(FRAM)"
6745   G$(VAL(G$(0))+3)=" S2  *END"
6750   G$(0)=STR$(VAL(G$(0))+3)
6755  NEXT X2
6760  RETURN
6799
6800  'SUBROUTINE 4 reload old grammar
6805  X4=DEC(SUB$(Y2$(0),3,2))
6810  IF X4=0 RETURN
6815  X3=POS(Y2$(X4),"$*",5)+2
6820  G$(DEC(SUB$(Y2$(X4),X3,2)))=SEG$(Y2$(X4),X3+2,POS(Y2$(X4),"|",X
          3+2)-1)
```

Semantic analysis 2 - MT27C1

```
6825  X5=DEC(SUB$(Y2$(X4),X3,2))
6830  X3=POS(Y2$(X4),"|",X3+2)+1
6835  IF X3<LEN(Y2$(X4)) THEN 6820
6840  G$(0)=STR$(X5)
6845  RETURN
6849
6850  'SUBROUTINE 2 add to G$(0)
6855  G$(0)=STR$(VAL(G$(0))+1)
6860  RETURN
6899
6950  'end
6955  X$=X1$=""
6960 FNEND
6999
7000 DEF FNM(X,X1,X$) 'test
7050  'which grammar
7055  ON POS("12",SUB$(G$(1),4,1),1) GOTO 7100,7200
7099
7100  'grammar 1
7103  IF OCC("ABCDEFGHIJKLMNOPQRSTUVWXYZ",SUB$(X$,1,1))>0 THEN 7900
7105  'structure of test: 1=op; 2=conj; 3=semantic cat
7110  IF SUB$(Y1$(X),1,1)<>SUB$(X$,1,1) THEN 7915 'op fails
7115  IF SUB$(X$,2,1)<>"&" THEN 7900 'end of test
7150  'semantic cat test
7155  X1=POS(Y1$(X),"$*",8)+4 'first semantic record
7160  IF X1>LEN(Y1$(X)) THEN 7915 'fails
7163  IF SUB$("AP",VAL(SUB$(Y1$(X),X1,1)),1)=SUB$(X$,3,1) THEN 7900
          'ok
7165  X1=POS(Y1$(X),"$*",X1+1)+3
7170  IF X1<>3 THEN 7160
7175  GOTO 7915 'cat fails
7199
7200  'grammar 2
7203  IF OCC("ABCDEFGHIJKLMNOPQRSTUVWXYZ",SUB$(X$,1,1))>0 THEN 7310
7205  'structure of test: 1=A or P; 2-4=case cat
7210  'also test semantic markers
7215  IF SUB$(X$,1,1)<>SUB$(Y1$(X),1,1) THEN 7915
7225  'right type of unit: now test rest of test (if necessary)
7230  IF OCC("pred|arg1",SUB$(Y1$(X),1,4))=0 THEN 7250 'an argument
7235  IF SUB$(Y1$(X),1,4)=SUB$(X$,1,4) THEN 7900 'success
7240  GOTO 7915 'failure
7249
7250  'calculate match for args
7255  X1=POS(Y1$(X),"$*",8)+3 'this is start of markers
7257  GOSUB 7400
7260  X2=POS(Y2$(X4),"["&SUB$(X$,2,1),1)+2
7265  X3=0
7270  IF SUB$(Y2$(X4),X2+X3,1)="1" THEN 7300 'ok
7275  IF SUB$(Y1$(X),X1+X3,1)="1" THEN 7300 'ok
7280  IF SUB$(Y1$(X),X1+X3,1)<>SUB$(Y2$(X4),X2+X3,1) THEN 7915
7300  X3=X3+1
7305  IF X3<8 THEN 7270
7310  IF DEC(SUB$(C$,7,2))>0 THEN 7900 'dubious success
7315  IF LEN(Y2$(0))=0 THEN 7900
7317  IF DEC(SUB$(Y2$(0),1,2))=0 THEN 7900
```

Semantic analysis 2 - MT27C1

```
7320  GOSUB 7400
7322  IF X4=0 THEN 7900
7325  X2=POS(Y2$(X4),"["&SUB$(X$,2,1),1)+11
7330  IF X2=11 THEN 7900 'success 'cos net name isn't a case name
7350  'prepositions
7355  IF X=1 THEN 7900 'dubious success
7360  X3=POS(Y1$(X),"$w",8)+2 'find argument prep.
7365  IF SUB$(Y1$(X),X3,1)="$" THEN 7900
            'dubious success cos prep not there
7370  X4=DEC(SUB$(Y2$(0),3,2)) 'find slot prep.
7375  IF SUB$(Y2$(X4),X2,1)="/" THEN 7915 'no slot prep. - so fail
7380  X$=SEG$(Y2$(X4),X2,POS(Y2$(X4),"/",X2))
7385  IF OCC(X$,SEG$(Y1$(X),X3,POS(Y1$(X),"$",X3)-1))=0 THEN 7915
            'fails
7390  GOTO 7900 'success
7400  X4=DEC(SUB$(Y2$(0),3,2)) 'SUBROUTINE
7405  RETURN
7900  'endings
7905  LET FNM=1
7910  GOTO 7920
7915  LET FNM=0
7920  X$=""
7925 FNEND
8000 DEF FNB$(X$,X2$,X,X1) 'ATN parser
8004  X1$=X2$
8005  X2$=SUB$(X$,15,4) 'name of net
8010  IF LEN(X1$)=0 THEN 8050 'not a backtracking call
8015  X1=DEC(SUB$(X1$,1,2)) ')
8020  X1$="" '                > housekeeping for backtracking call
8025  GOTO 8600 '             )
8049
8050  'housekeeping for non-backtracking call
8060  Y$(0)=STR$(VAL(Y$(0))+1)
8065  X1=VAL(Y$(0))
8099
8100  'find start of net
8105  X=5
8110  IF SUB$(G$(X),1,4)=X2$ THEN 8130
8115  X=X+1
8120  GOTO 8110
8130  X2$="S1 " 'first state must be "S1"
8149
8150  'find state
8155  IF SUB$(G$(X),2,3)=X2$ THEN 8200 'success
8160  X=X+1
8165  GOTO 8155
8199
8200  'what kind of test is this
8205  IF SUB$(G$(X),6,1)="*" THEN 8500 'end test
8210  IF P+1>VAL(Y1$(0)) THEN 8550 'get next test, because end of
8211  '     data has been reached without an end to the net
8215  IF SUB$(G$(X),6,1)<"A" THEN 8250 'unit
8220  IF SUB$(G$(X),6,1)<="Z" THEN 8350 'net
8249
8250  'this is a unit
```

Semantic analysis 2 - MT27C1

```
8255  IF FNM(P+1,0,SUB$(G$(X),6,4))=0 THEN 8550 'get next test
8260  'add record
8265  P=P+1
8270  Y$(X1)=Y$(X1)&SUB$(G$(X),6,4)&ENC$(P,2)&ENC$(P,2)'name&st
          &end pos
8280  Y$(X1)=Y$(X1)&ENC$(X,2)&SUB$(X$,7,4) 'rule & link from above
8285  Y$(X1)=Y$(X1)&ENC$(0,2)&ENC$(P,2)&ENC$(0,2)&ENC$(0,2)'linksdown
          &along
8290  X2$=G$(X)
8300  GOTO 8450 'change pointer along
8349
8350  'this is a net
8352  IF FNM(P+1,0,SUB$(G$(X),6,4))=0 THEN 8550
          'test for preps if approp.
8355  X1$=ENC$(P,2)&ENC$(P,2)&ENC$(X,2) 'start & end pos & rule
8360  X1$=X1$&ENC$(VAL(Y$(0)),2)&ENC$(LEN(Y$(VAL(Y$(0))))+1,2)
          'above link
8365  X1$=X1$&ENC$(0,2)&ENC$(0,2)&SUB$(G$(X),6,4) 'blanks & name
8367  X2$=G$(X)
8370  X1$=FNB$(X1$,"",0,0) 'call on ATN
8375  IF LEN(X1$)=0 THEN 8550 'fails - get next test
8380  'add record (X1 is current record row)
8385  Y$(X1)=Y$(X1)&SUB$(X2$,6,4)&SUB$(X$,1,2)&ENC$(P,2)'name,st
          &endpos
8400  Y$(X1)=Y$(X1)&ENC$(X,2)&SUB$(X$,7,4)'rule
          & link from above constit
8405  Y$(X1)=Y$(X1)&SUB$(X1$,7,4)&ENC$(0,2)
          &ENC$(0,2)'links down + along
8449
8450  'update previous sister constituent
8455  IF LEN(Y$(X1))>23 THEN 8480 'this isn't first item at this level
8460  X$=RPL$(X$,ENC$(0,2)&ENC$(0,2),11) 're-write link from above
8480  IF LEN(X2$)<14 THEN 8482
8481  X3=FNE(X,X1,LEN(Y$(X1))-3,"",X2$) 'manipulate grammar
8482  X2$=SUB$(G$(X),11,3) 'name of next state
8485  IF SUB$(G$(X),1,1)<>" " THEN 8150 'find next state
8490  X=X-1 'get back to the beginning of this net
8495  GOTO 8485
8499
8500  'end
8505  IF X1>2 THEN 8515 'this isn't initial net
8510  IF P+1<=VAL(Y1$(0)) THEN 8600 'fails cos not all data is covered
8515  X1$=SUB$(X$,1,2)&ENC$(P,2) 'start & end pos
8520  X1$=X1$&ENC$(X,2)&ENC$(X1,2) 'rule & current row
8525  X1$=X1$&ENC$(LEN(Y$(X1))-22,2) 'column of current row
8530  X1$=X1$&ENC$(0,2)&ENC$(0,2)&SUB$(G$(X),6,4) 'blanks & last name
8535  LET FNB$=X1$ ')
8540  X$=X1$="" '    > housekeeping
8545  GOTO 8950 '    )
8549
8550  'get next test in this state
8555  X=X+1 'increment pointer
8557  IF X>VAL(G$(0)) THEN 8600 'to backtracking
          - this gets unloaded FRAM
8560  IF SUB$(G$(X),1,5)<>"     " THEN 8600 'to backtracking
```

Semantic analysis 2 - MT27C1

```
8565  GOTO 8200 'to "what kind of test is this"
8599
8600  'backtracking
8605  IF LEN(Y$(X1))=0 THEN 8800 'total failure on this level
8610  're-instate pointers
8615  X=DEC(SUB$(Y$(X1),LEN(Y$(X1))-13,2)) 'rule
8620  P=DEC(SUB$(Y$(X1),LEN(Y$(X1))-15,2))-1 'position
8621  IF LEN(G$(X))<14 THEN 8625
8622  X3=FNE(X,X1,LEN(Y$(X1))-3,"'",G$(X))
            'undo manipulation of grammar
8625  'if this is second item in net, re-instate pointer to above
8630  IF LEN(Y$(X1))<>22 THEN 8635 'not 2nd item
8632  X$=RPL$(X$,SUB$(Y$(X1),11,4),7)
8635  IF SUB$(Y$(X1),LEN(Y$(X1))-21,1)<"A" THEN 8640
            'go back over units
8637  IF SUB$(Y$(X1),LEN(Y$(X1))-21,1)<="Z" THEN 8700
            'go back over nets
8640  'this is a unit, not a network
8645  Y$(X1)=SEG$(Y$(X1),1,LEN(Y$(X1))-22)
            'lop off 1 constitute record
8660  GOTO 8550 'next test
8699
8700  'backtracking down to individual units
8705  X2$=SUB$(Y$(X1),LEN(Y$(X1))-21,22)
8710  Y$(X1)=SUB$(Y$(X1),1,LEN(Y$(X1))-22)
            'lop off 1 constitute record
8725  X1$=SUB$(X$,1,2)&SUB$(X$,1,2)&SUB$(X$,5,2) 'start & end pos
         & rule
8730  X1$=X1$&ENC$(X1,2)&ENC$(LEN(Y$(X1))+1,2) 'link from above
8735  X1$=X1$&ENC$(0,2)&ENC$(0,2)&SUB$(G$(X),6,4) 'blanks & name
8740  X2$=SUB$(X2$,15,2) 'row which this constituent was linked to
8745  X1$=FNB$(X1$,X2$,0,0) 'call on RTN
8750  IF LEN(X1$)=0 THEN 8550 'fails - get next test
8755  'add record (X1 is current record row)
8760  Y$(X1)=Y$(X1)&SUB$(G$(X),6,4)&SUB$(X$,1,2)&ENC$(P,2)'name,st
         &endpos
8765  GOTO 8400
8799
8800  'total failure on this level
8805  FOR X2=X1+1 TO VAL(Y$(0)) ')
8810   Y$(X2-1)=Y$(X2) '          > cut out the failed row
8815  NEXT X2 '                   )
8820  Y$(0)=STR$(VAL(Y$(0))-1) '& change overall pointer
8824
8825  'now update all pointers to previously existing rows
8830  FOR X2=1 TO VAL(Y$(0)) 'row
8835   FOR X3=1 TO LEN(Y$(X2)) STEP 22 'constituents
8840    FOR X4=10 TO 14 STEP 4
8845     IF DEC(SUB$(Y$(X2),X3+X4,2))<>X1 THEN 8860
8850     Y$(X2)=RPL$(Y$(X2),ENC$(0,2)&ENC$(0,2),X3+X4)
8855     GOTO 8870
8860     IF DEC(SUB$(Y$(X2),X3+X4,2))<X1 THEN 8870
8865     Y$(X2)=RPL$(Y$(X2),ENC$(DEC(SUB$(Y$(X2),X3+X4,2))-1,2),X3+X4)
8870    NEXT X4
8875   NEXT X3
```

Semantic analysis 2 - MT27C1

```
8880  NEXT X2
8885  LET FNB$="" '   )
8890  X$=X1$=X2$="" ' > housekeeping
8895  GOTO 8950 '     )
8950 FNEND
9900 DEF FNZ(X$,X,X1) 'terms
9901  PRINT "ERROR ";X1,X
9910  X$=ENC$(X,4)&ENC$(X1,2)&X$
9925  FILE#1:"ERROR",2771
9930  IF LOF(1)>0 THEN 9940
9935  MARGIN#1:44
9940  RESET#1:LOF(1)
9945  WRITE#1:"MT27C1"&SUB$(C$,5,2)&SUB$(X$,1,MRG(1)-8)
9950  IF X1>1000 THEN 9960
9955  IF X1>500 THEN 9970
9960  CHAIN "MT11C1,2771"
9970  X$=""
9975 FNEND
9999 END
```

* * * END OF PRINT * * *

FLOWCHARTS

	Page
Main routine - MT27C1/1	252
RTN analyser - MT27C1/2	253
Test match - MT27C1/3	255
Perform actions - MT27C1/4	256
Extract PREDicates and ARGuments - MT27C1/5	257
Store case units - MT27C1/6	258

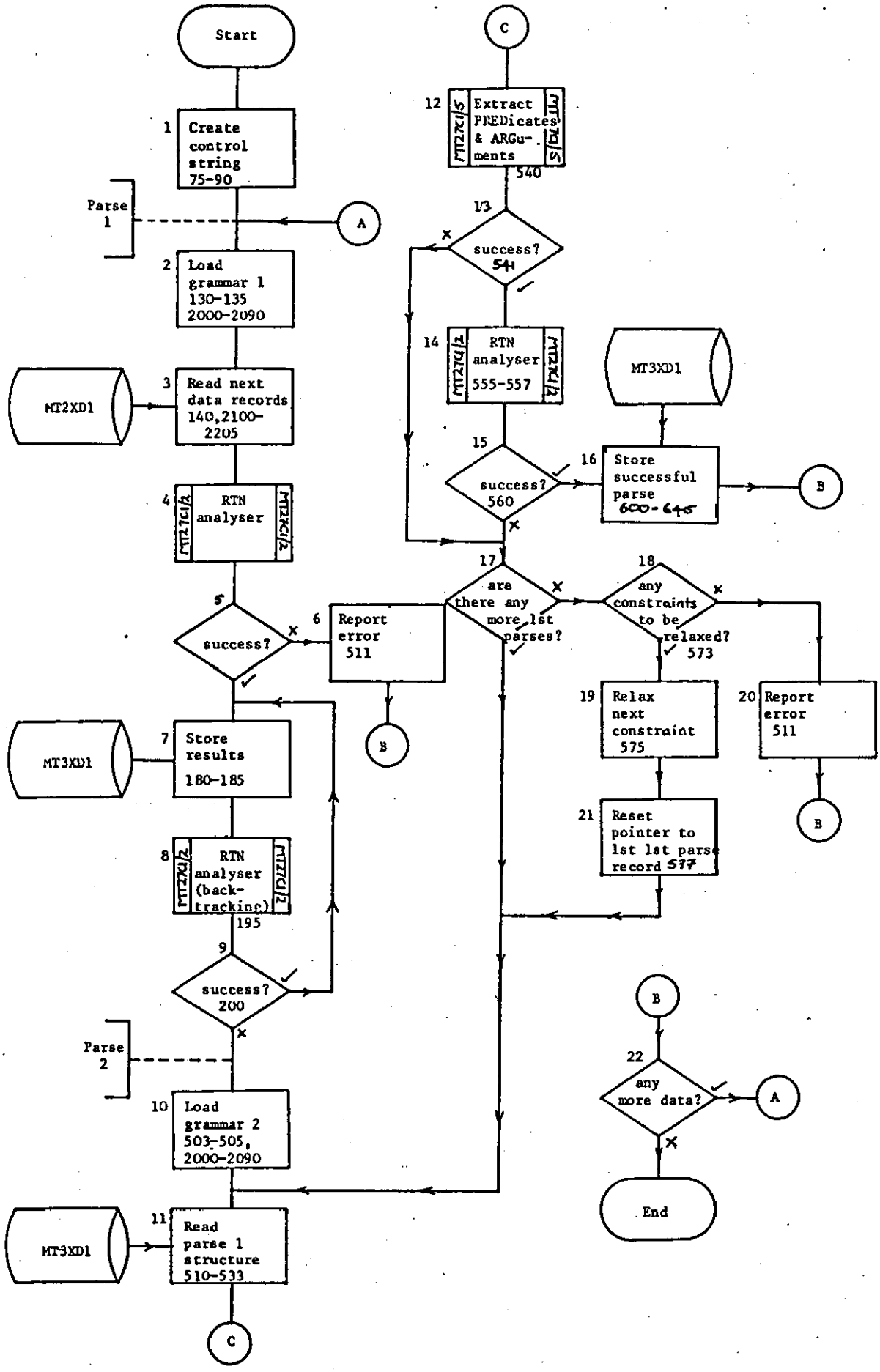

Semantic analysis 2 / main routine / Sheet 1 of 1 MT27C1/1

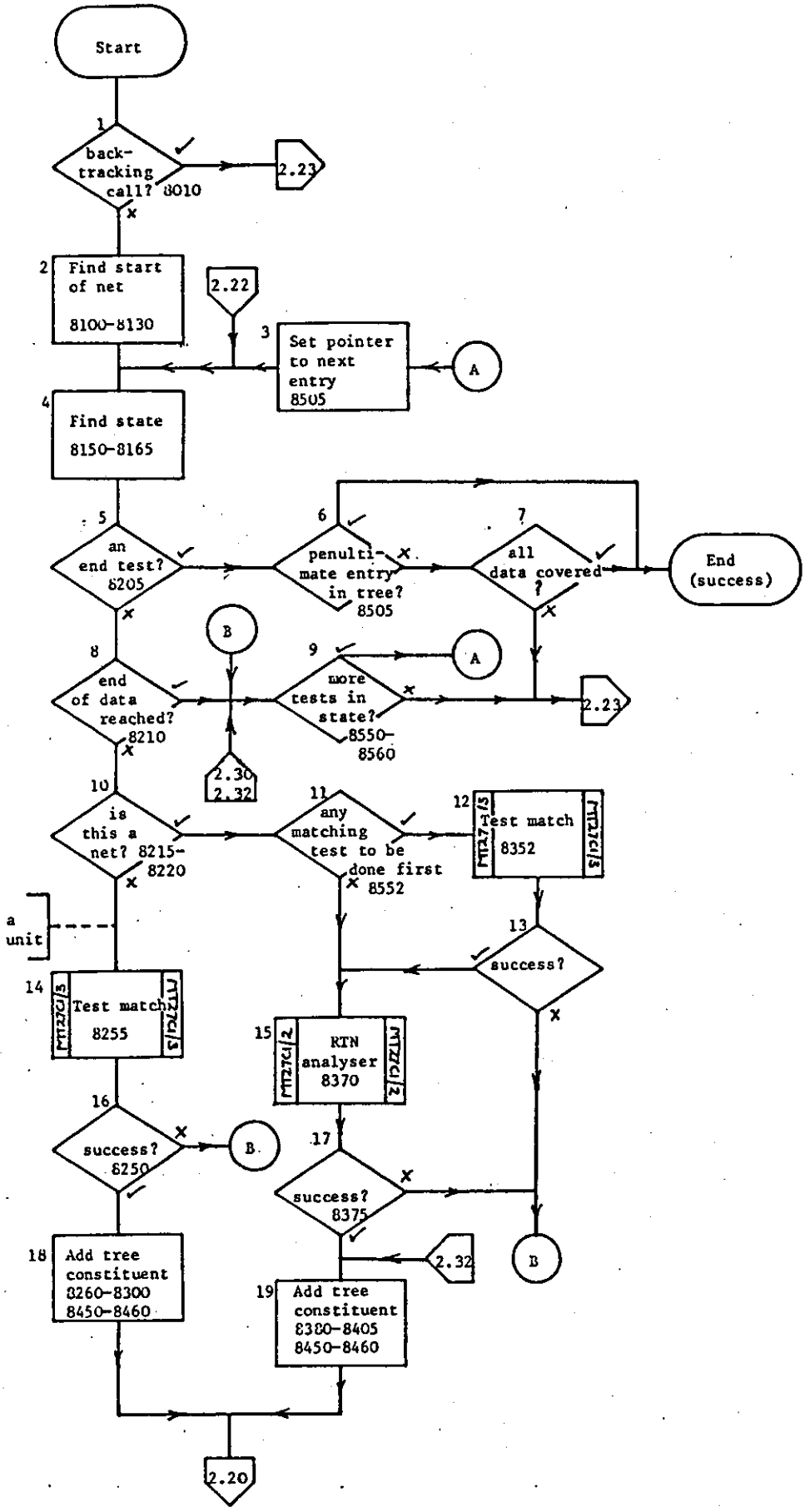

Semantic analysis 2 / RTN analyser / Sheet 1 of 2 / MT27C1/2

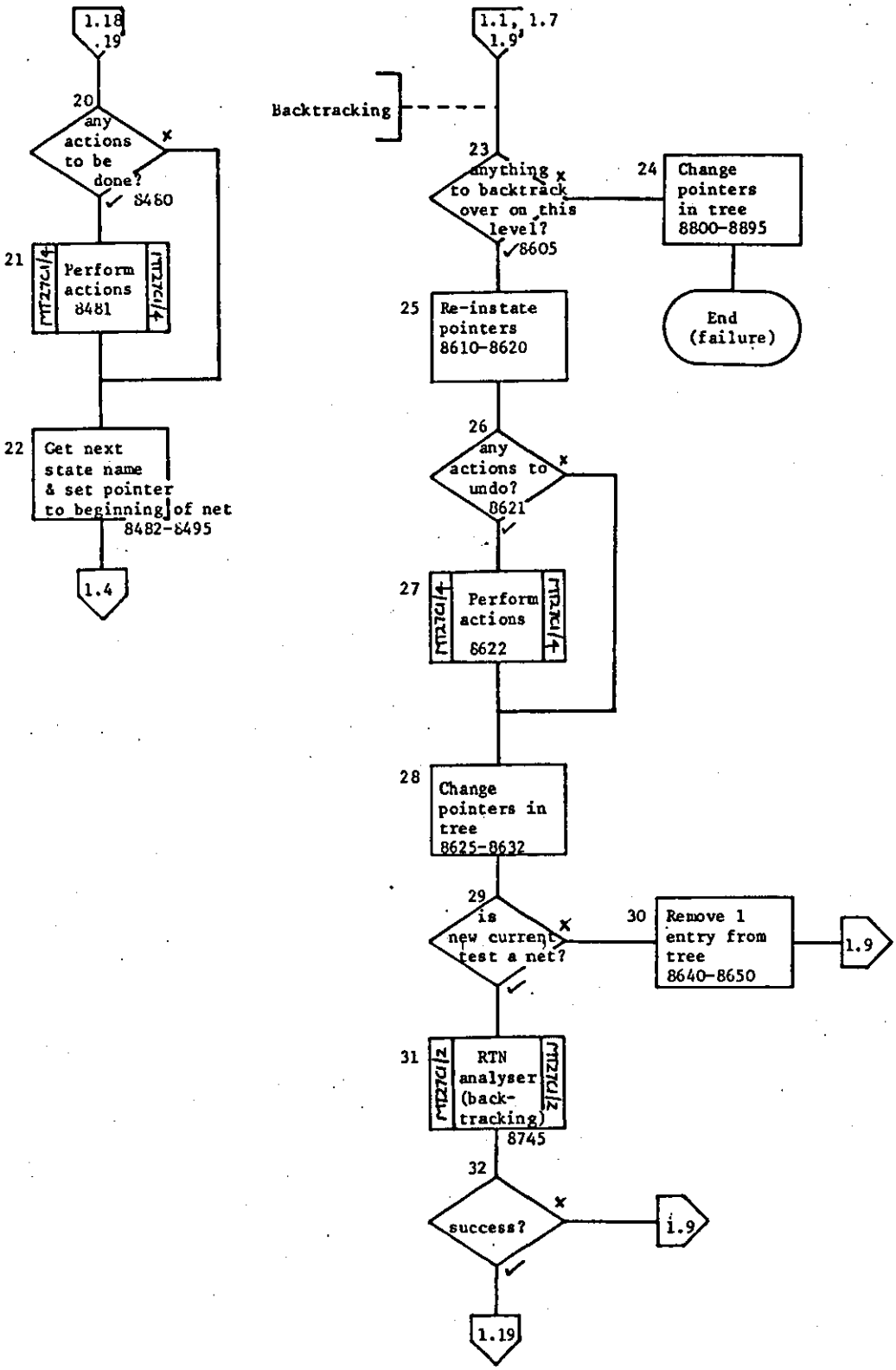

Semantic analysis 2 / RTN analyser / Sheet 2 of 2 / MT27C1/2

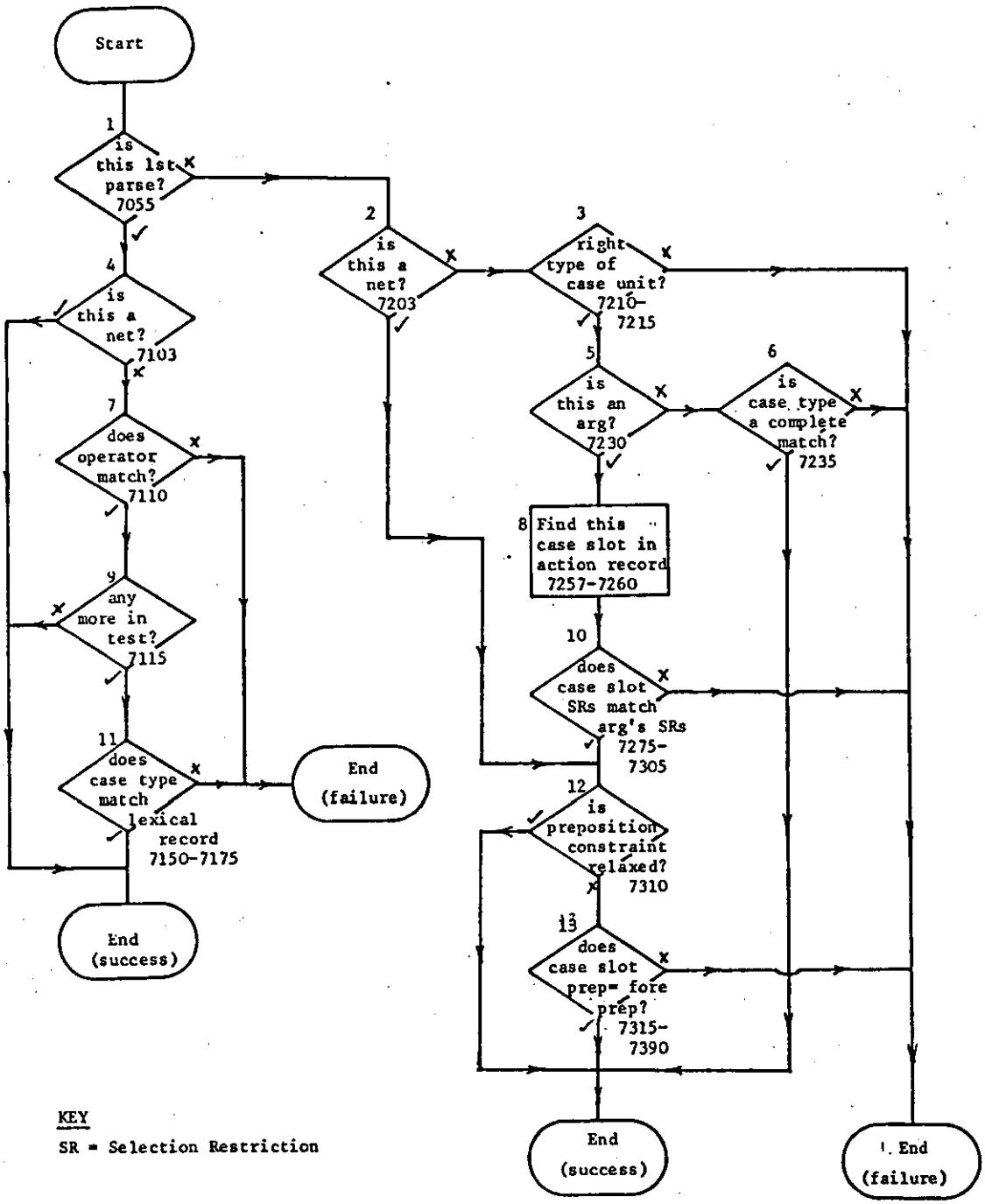

Semantic analysis 2 / test match / Sheet 1 of 1 / MT27C1/3

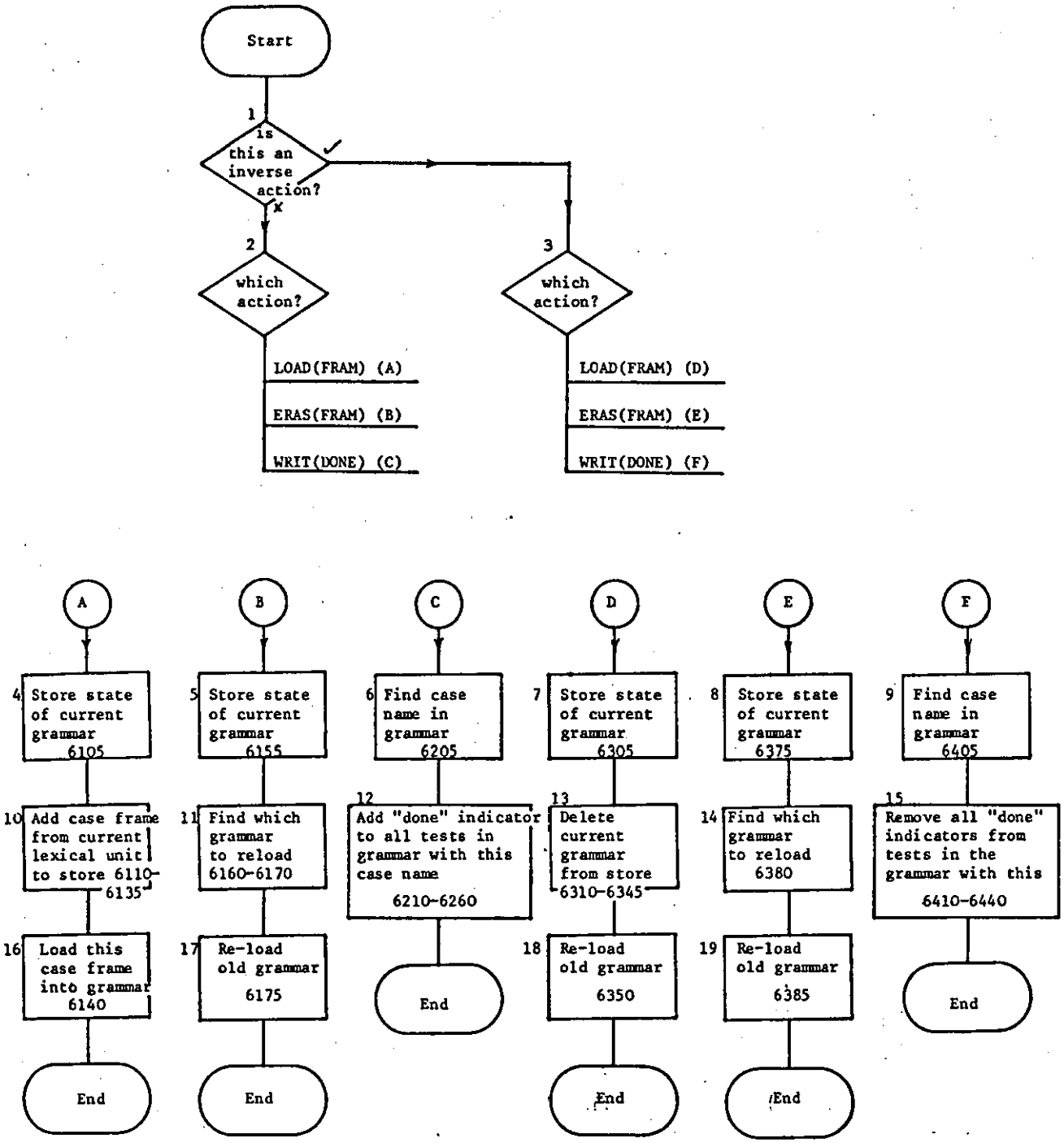

Semantic analysis 2 / perform actions / Sheet 1 of 1 / MT27C1/4

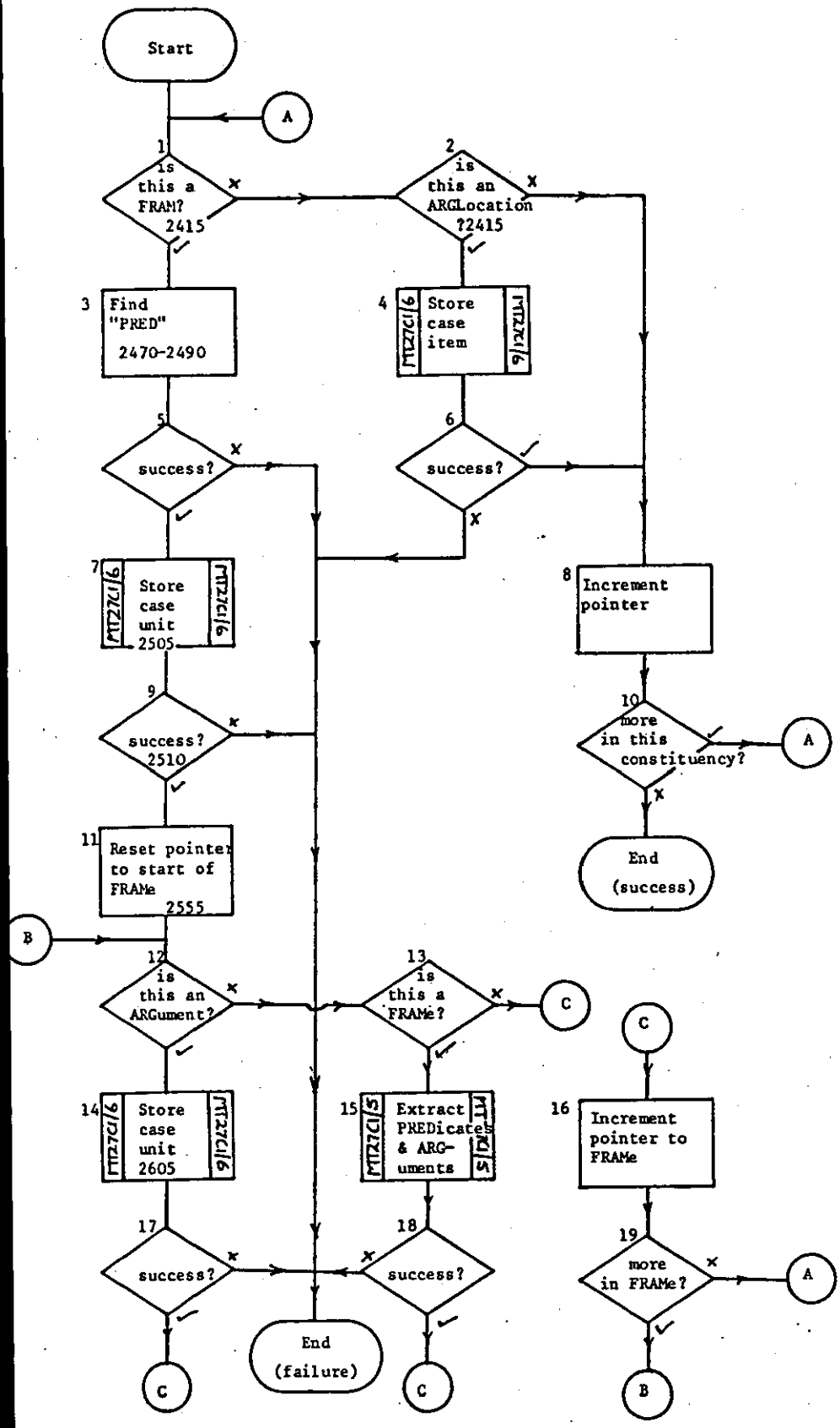

Semantic analysis 2 / extract PREDicates and ARGuments / Sheet 1 of 1 /

MT27C1/5

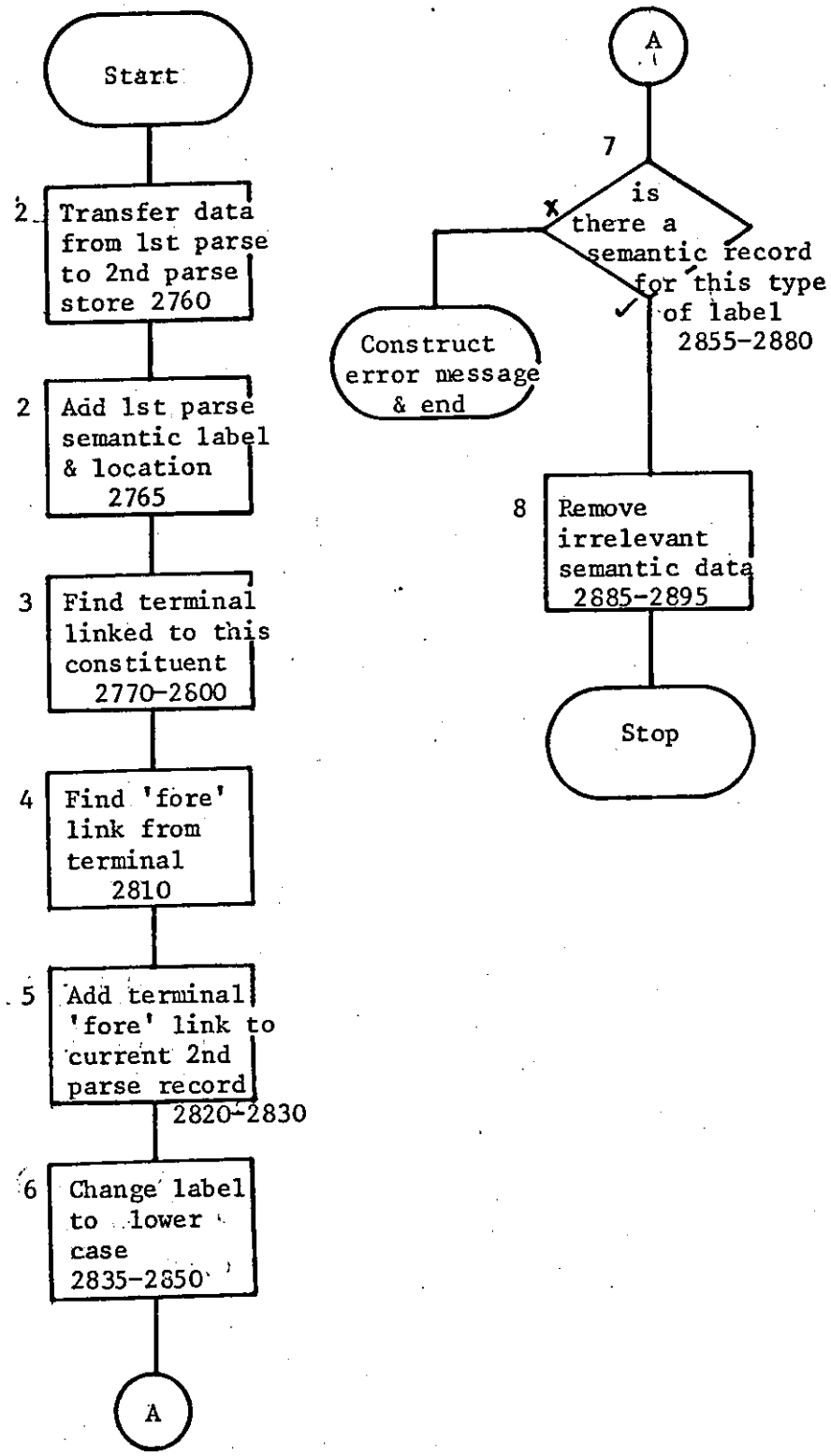

Semantic analysis 2 / store case units / Sheet 1 of 1

MT27C1/6

APPENDIX K

PROGRAM MT29C1 (SEMANTIC ANALYSIS 3)

Program listing 260

Flowcharts 266

Semantic analysis 3 - MT29C1

```
1 REM Semantic analysis 3 - P J Hancox - DLIS - LUT
5 ON ERROR GOTO 900
7 PRINT FSP
10 DIM Y$(25),Y1$(7),Y2$(15),Y3$(7),Y4$(25),Y5$(10),T(3,5)
100 'files
105 FILE#1:"MT3XD1",2771
110 FILE#2:"MT2XD1",2771
115 SCRATCH#2
120 MARGIN#2:174
125 FILE#3:"MT1XD1",2771
149
150 'read backwards through #1 to get indiviual records
155 T(0,1)=0 'no of records in file
160 X=LOF(1)-1 'start at end of file
165 RESET#1:X
170 READ#1:X$
175 IF DEC(SUB$(X$,1,2))>0 THEN 200
180 T(0,1)=T(0,1)+1 'add details to string
185 T(1,T(0,1))=X 'loc of control record
190 T(2,T(0,1))=DEC(SUB$(X$,5,2))+1 '1st parse
195 T(3,T(0,1))=DEC(SUB$(X$,3,2))+1 '2nd parse
200 IF DEC(SUB$(X$,11,2))=0 THEN 250
205 X=DEC(SUB$(X$,11,2))
210 GOTO 165
249
250 'are there really any records
255 IF T(0,1)=0 THEN 475 'no records so chain
299
300 'read in 1st parse
305 RESET#1:T(2,T(0,1))
310 READ#1:Y$(0)
315 X=1
320 READ#1:Y$(X)
325 X=X+1
330 IF X<=VAL(Y$(0)) THEN 320
335 READ#1:Y1$(0)
340 X=1
345 READ#1:Y1$(X)
350 X=X+1
355 IF X<=VAL(Y1$(0)) THEN 345
360 RESET#1:T(3,T(0,1))
365 READ#1:Y2$(0)
370 X=1
375 READ#1:Y2$(X)
380 X=X+1
385 IF X<=VAL(Y2$(0)) THEN 375
390 READ#1:Y3$(0)
395 X=1
400 READ#1:Y3$(X)
405 X=X+1
410 IF X<=VAL(Y3$(0)) THEN 400
415 T(0,1)=T(0,1)-1
420 GOSUB 1000 'concatenate structures
425 'write final structure to #2
427 GOSUB 3000 'SUBROUTINE abbreviate structures
```

Semantic analysis 3 - MT29C1

```
430 RESET#2:LOF(2)
435 FOR X=0 TO VAL(Y4$(0))
440  WRITE#2:Y$(X)
445 NEXT X
450 FOR X=0 TO VAL(Y1$(0))
455  WRITE#2:SUB$(Y1$(X),1,7)&" "&SEG$(Y1$(X),8,LEN(Y1$(X)))
460 NEXT X
474
475 'get next reading, if any
480 IF T(0,1)>0 THEN 300
485 CHAIN "MT31C1,2771"
499
900 'errors
905 X=FNZ("",ERL,ERR)
999
1000 'subroutine write records
1050 MAT Y4$=NUL$
1055 Y4$(0)="1"
1060 X$=FNA$(0,2,0,1,1) 'runs structures together
1065 Y4$(1)="FULL"&ENC$(0,2)&ENC$(0,2)&ENC$(0,2)
1070 Y4$(1)=Y4$(1)&ENC$(0,2)&ENC$(0,2)
1075 Y4$(1)=Y4$(1)&ENC$(2,2)&ENC$(1,2)&ENC$(0,2)&ENC$(0,2)
1099
1100 'change labels
1105 'set up dictionary of old/new names
1110 MAT Y$=NUL$
1115 Y$(1)="FULL=FULL"
1120 Y$(2)="FRAM=FRAM"
1125 Y$(3)="pred=PRED"
1130 Y$(4)="argl=GLOC"
1135 Y$(5)="PART=PART"
1140 Y$(6)="aA  |PA  =AGEN"
1145 Y$(7)="aB  |PB  =BENE"
1150 Y$(8)="aP  |PP  =PAT "
1155 Y$(9)="aE  |PE  =EXP "
1160 Y$(10)="aI  |PI  =INST"
1165 Y$(11)="aC  |PC  =COM "
1170 Y$(12)="aL  |PL  =LOC "
1171
1175 Y$(13)="af  |Pf  =FROM"
1180 Y$(14)="at  |Pt  =THRU"
1185 Y$(15)="ae  |Pe  = TO  "
1190 Y$(16)="aF  |PF  =FACT"
1295 Y$(0)="16"
1299
1300 'search through structure
1305 FOR X=VAL(Y4$(0)) TO 1 STEP-1
1310  FOR X1=1 TO LEN(Y4$(X)) STEP 22
1315   X2=1 'search for label in dictionary
1320   X3=POS(SUB$(Y$(X2),1,POS(Y$(X2),"=",1)),SUB$(Y4$(X),X1,4),1)
1325   IF X3>0 THEN 1345
1330   X2=X2+1
1335   IF X2<=VAL(Y$(0)) THEN 1320
1340   GOTO 1400 'go to chase up tree
1345   Y4$(X)=RPL$(Y4$(X),SUB$(Y$(X2),POS(Y$(X2),"=",1)+1,4),X1)
```

Semantic analysis 3 - MT29C1

```
1350   GOTO 1550 'loop
1399
1400   'chase up tree
1405   X2=X 'row pointer upward
1410   X3=1 'column pointer upward (links are only from 1st item)
1415   X4=DEC(SUB$(Y4$(X2),X3+10,2))
1420   IF X4=0 THEN 1550 'no more to do - so loop
1425   X3=DEC(SUB$(Y4$(X2),X3+12,2))
1430   X2=X4
1435   IF MOD(X3+21,22)=0 THEN 1445
1440   X3=X3+1
1445   IF SUB$(Y4$(X2),X3,4)<>"pred" THEN 1460
1450   Y4$(X)=RPL$(Y4$(X),SUB$(Y4$(X2),X3,4),X1)
1455   GOTO 1550 'loop
1460   IF SUB$(Y4$(X2),X3,1)<>"a" THEN 1525 'look further up tree
1465   Y4$(X)=RPL$(Y4$(X),"arg ",X1)
1470   GOTO 1550 'loop
1499
1525   'look further up the tree
1530   GOTO 1415
1549
1550   'loop
1555  NEXT X1
1560 NEXT X
1599
1600 'reunite structures
1605 MAT Y$=NUL$
1610 Y$(0)="0"
1615 X1=0 'records which syntactic structure is currently held
1620 FOR X=1 TO VAL(Y1$(0))
1625  IF DEC(SUB$(Y1$(X),3,2))=X1 THEN 1700 'this structure is loaded
1630  GOSUB 1800 'loads structures
1635  Y$(0)="1"
1640  X1=X2=DEC(SUB$(Y1$(X),3,2))
1650  Y$(0)=STR$(VAL(Y$(0))+1)
1655  RESET#3:X2
1660  READ#3:Y$(VAL(Y$(0)))
1665  X2=DEC(SUB$(Y$(VAL(Y$(0))),1,2))
1670  IF X2>0 THEN 1650
1674
1675  'loaded - now concatenate into row 1
1680  X2=2
1685  Y$(1)=""&Y$(1)&SEG$(Y$(X2),3,LEN(Y$(X2)))
1690  X2=X2+1
1695  IF X2<=VAL(Y$(0)) THEN 1685
1699
1700  'find terminal for this item
1705  X$=ENC$(0,2)&ENC$(X,2)
1710  X2=VAL(Y4$(0))
1715  X3=0
1720  X3=POS(Y4$(X2),X$,X3+1)
1725  IF X3=0 THEN 1740
1730  IF MOD(X3+7,22)=0 THEN 1750 'found
1735  GOTO 1720
1740  X2=X2-1
```

Semantic analysis 3 - MT29C1

```
1745  IF X2>0 THEN 1715
1749
1750  'found - now change Y$(1)
1755  X2=X2+LOF(2) 'actual location of record in file
1760  X4=DEC(SUB$(Y1$(X),5,2))+18
1765  Y$(1)=RPL$(Y$(1),ENC$(X2,2)&ENC$(X3-14,2),X4)
1770  X3=X3-14
1775  IF MOD(X3+21,22)=0 THEN 1785
1780  X3=X3+1
1785  X3=(((X3+21)/22)*10)-9
1790  Y$(1)=RPL$(Y$(1),ENC$(X3,2),X4+2)
1792  'done - loop
1794 NEXT X
1796 GOSUB 1800 'loads structures
1798 RETURN
1799
1800 'reload structures
1803 IF VAL(Y$(0))=0 RETURN 'no structures to write
1805 X2=2
1810 Y$(X2)=RPL$(Y$(X2),SUB$(Y$(1),1,LEN(Y$(X2))-2),3)
1815 Y$(1)=SEG$(Y$(1),LEN(Y$(X2))-1,LEN(Y$(1)))
1820 X2=X2+1
1825 IF X2<=VAL(Y$(0)) THEN 1810
1830 RESET#3:X1
1835 WRITE#3:Y$(2)
1840 X2=3
1845 IF X2>VAL(Y$(0)) THEN 1870
1850 RESET#3:DEC(SUB$(Y$(X2-1),1,2))
1855 WRITE#3:Y$(X2)
1860 X2=X2+1
1865 GOTO 1845
1870 MAT Y$=NUL$
1875 RETURN
1999
2000 DEF FNA$(X,X1,X2,P,P1) 'runs structures together
2050  'housekeeping
2055  X=VAL(Y4$(0))+1 'where to go
2060  Y4$(0)=STR$(X)
2065  'X1 = row of Y2$()
2070  'X2 = column of Y2$()
2099
2100  'check what kind of constituent this is
2105  IF DEC(SUB$(Y2$(X1),X2+15,2))>0 THEN 2600 'a net
2110  'allocate net name
2120  Y4$(X)=Y4$(X)&SUB$(Y2$(X1),X2+1,4)&ENC$(0,2)&ENC$(0,2)&ENC$(0,2)
2125  Y4$(X)=Y4$(X)&ENC$(P,2)&ENC$(P1,2) 'link from above
2130  Y4$(X)=Y4$(X)&ENC$(VAL(Y4$(0))+1,2)&ENC$(0,2)&ENC$(0,2)
          &ENC$(0,2)
2149
2150  'now get sub parts
2155  MAT Y5$=NUL$
2160  Y5$(0)="1"
2165  X3=DEC(SUB$(Y2$(X1),X2+17,2))
2170  X4=UPK(SUB$(Y3$(X3),5,1))
2175  X5=DEC(SUB$(Y3$(X3),6,2))
```

Semantic analysis 3 - MT29C1

```
2180 Y5$(1)=SUB$(Y$(X4),X5,22)
2199
2200 'now go through
2205 X3=1
2210 FOR X4=1 TO LEN(Y5$(X3)) STEP 22
2215  X5=DEC(SUB$(Y5$(X3),X4+14,2))
2220  IF X5=0 THEN 2250 'no further action
2230  Y5$(X3)=RPL$(Y5$(X3),ENC$(VAL(Y5$(0))+1,2)&ENC$(0,2),X4+14)
2235  Y5$(0)=STR$(VAL(Y5$(0))+1)
2240  Y5$(VAL(Y5$(0)))=Y$(X5)
2245  Y5$(VAL(Y5$(0)))=RPL$(Y5$(VAL(Y5$(0))),ENC$(X3,2),11)
2250 NEXT X4
2255 X3=X3+1
2260 IF X3<=VAL(Y5$(0)) THEN 2210
2274
2275 'all sub-parts assembled - add to Y4$()
2280 'update upwards pointers
2285 X3=VAL(Y4$(0))-1
2290 X4=2 'rows
2295 Y5$(X4)=RPL$(Y5$(X4),ENC$(X3+DEC(SUB$(Y5$(X4),11,2)),2)
          &ENC$(1,2),11)
2300 X4=X4+1
2305 IF X4<=VAL(Y5$(0)) THEN 2295
2310 'done - now increment downward pointers
2315 X4=2
2320 FOR X5=15 TO LEN(Y5$(X4)) STEP 22
2325  IF DEC(SUB$(Y5$(X4),X5,2))=0 THEN 2335
2330  Y5$(X4)=RPL$(Y5$(X4),ENC$(X3+DEC(SUB$(Y5$(X4),X5,2)),2),X5)
2335 NEXT X5
2340 X4=X4+1
2345 IF X4<=VAL(Y5$(0)) THEN 2320
2349
2350 'now update pointers to top row
2355 Y5$(2)=RPL$(Y5$(2),ENC$(X,2)&ENC$(LEN(Y4$(X))-21,2),11)
2360 'copy
2365 X3=2
2370 Y4$(0)=STR$(VAL(Y4$(0))+1)
2375 Y4$(VAL(Y4$(0)))=Y5$(X3)
2380 X3=X3+1
2385 IF X3<=VAL(Y5$(0)) THEN 2370
2390 'done - increment counters
2395 GOTO 2900
2399
2600 'a net
2615 Y4$(X)=Y4$(X)&SUB$(Y2$(X1),X2+1,4)&ENC$(0,2)&ENC$(0,2)&ENC$(0,2)
2620 Y4$(X)=Y4$(X)&ENC$(P,2)&ENC$(P1,2) 'link from above
2625 Y4$(X)=Y4$(X)&ENC$(0,2)&ENC$(0,2)&ENC$(0,2)&ENC$(0,2)
2630 X3=DEC(SUB$(Y2$(X1),X2+15,2))
2635 X4=DEC(SUB$(Y2$(X1),X2+17,2))
2640 X$=FNA$(0,X3,0,X,LEN(Y4$(X))-21) 'recursive call
2645 Y4$(X)=RPL$(Y4$(X),X$,LEN(Y4$(X))-7)
2650 'done
2655 GOTO 2900 'increment pointers
2899
2900 'increment pointers
```

Semantic analysis 3 - MT29C1

```
2905  X2=X2+22
2910  IF X2<LEN(Y2$(X1)) THEN 2100
2915  LET FNA$=ENC$(X,2)&ENC$(1,2)
2920  X$=""
2925 FNEND
2999
3000 'SUBROUTINE abbreviate structures
3005 MAT Y$=NUL$
3010 FOR X=1 TO VAL(Y4$(0))
3015  FOR X1=1 TO LEN(Y4$(X)) STEP 22
3020   Y$(X)=Y$(X)&SUB$(Y4$(X),X1,4)
3022   Y$(X)=Y$(X)&PAK$(DEC(SUB$(Y4$(X),X1+10,2)),1)
3025   X2=DEC(SUB$(Y4$(X),X1+12,2))
3030   GOSUB 3100
3035   Y$(X)=Y$(X)&PAK$(DEC(SUB$(Y4$(X),X1+14,2)),1)
3037   X2=DEC(SUB$(Y4$(X),X1+16,2))
3040   GOSUB 3100
3045  NEXT X1
3050 NEXT X
3055 Y$(0)=Y4$(0)
3085 RETURN
3099
3100 'SUBROUTINE change pointers
3105 IF MOD(X2+21,22)=0 THEN 3115
3110 X2=X2+1
3115 X2=(((X2+21)/22)*10)-9
3120 Y$(X)=Y$(X)&ENC$(X2,2)
3125 RETURN
9899
9900 DEF FNZ(X$,X,X1) 'errors
9901  PRINT "ERROR";X1;" AT";X
9905  NO ERROR
9910  X$=ENC$(X,4)&ENC$(X1,2)&X$
9915  FILE#1:"MT1XD1",2771
9920  READ#1:X1$
9925  FILE#1:"ERROR",2771
9930  IF LOF(1)>0 THEN 9940
9935  MARGIN#1:44
9940  RESET#1:LOF(1)
9945  WRITE#1:"MT29C1"&SUB$(X1$,5,2)&SUB$(X$,1,MRG(1)-8)
9950  CHAIN "MT11C1,2771"
9955 FNEND
9999 END
```

* * * END OF PRINT * * *

FLOWCHARTS

	Page
Main routine - MT29C1/1	267
Unify first and second parses - MT29C1/2	268
Run first and second parses together - MT29C1/3	269

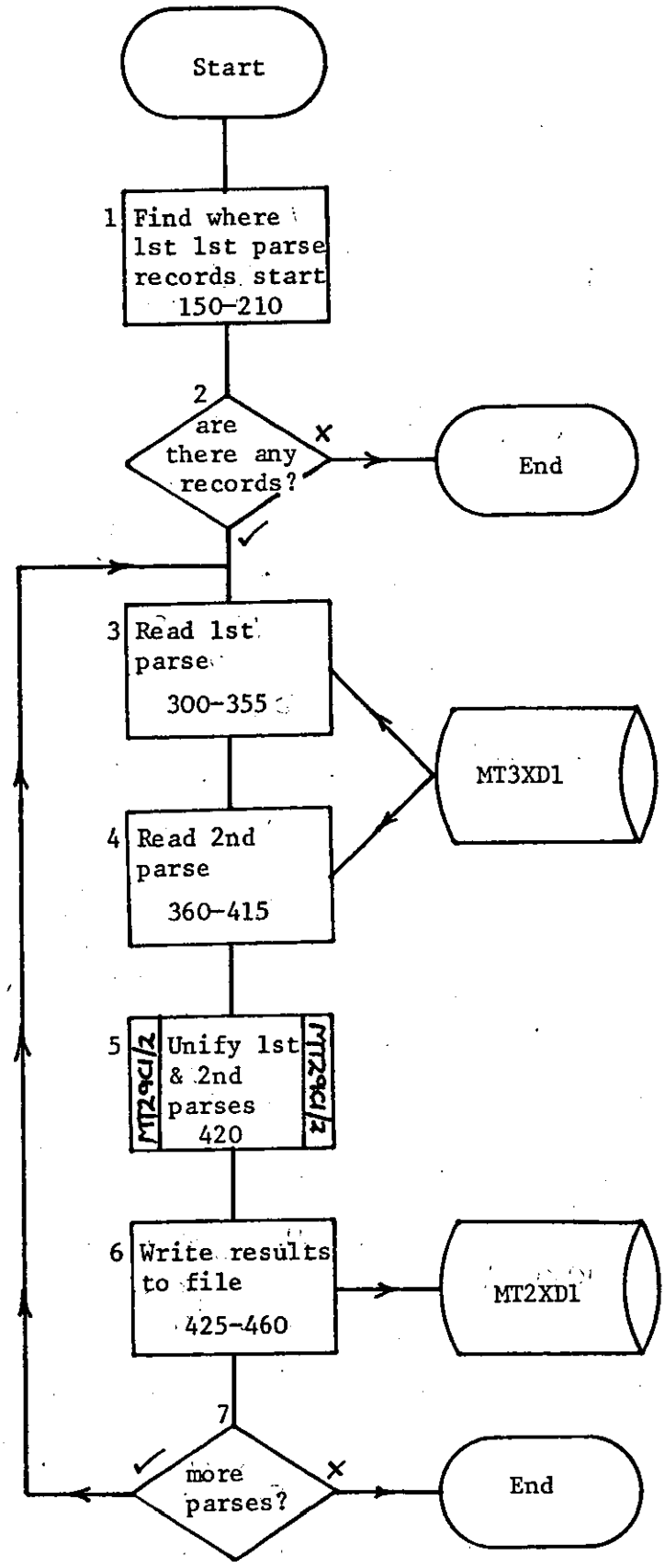

Semantic analysis 3 / main routine / sheet 1 of 1 MT29C1/1

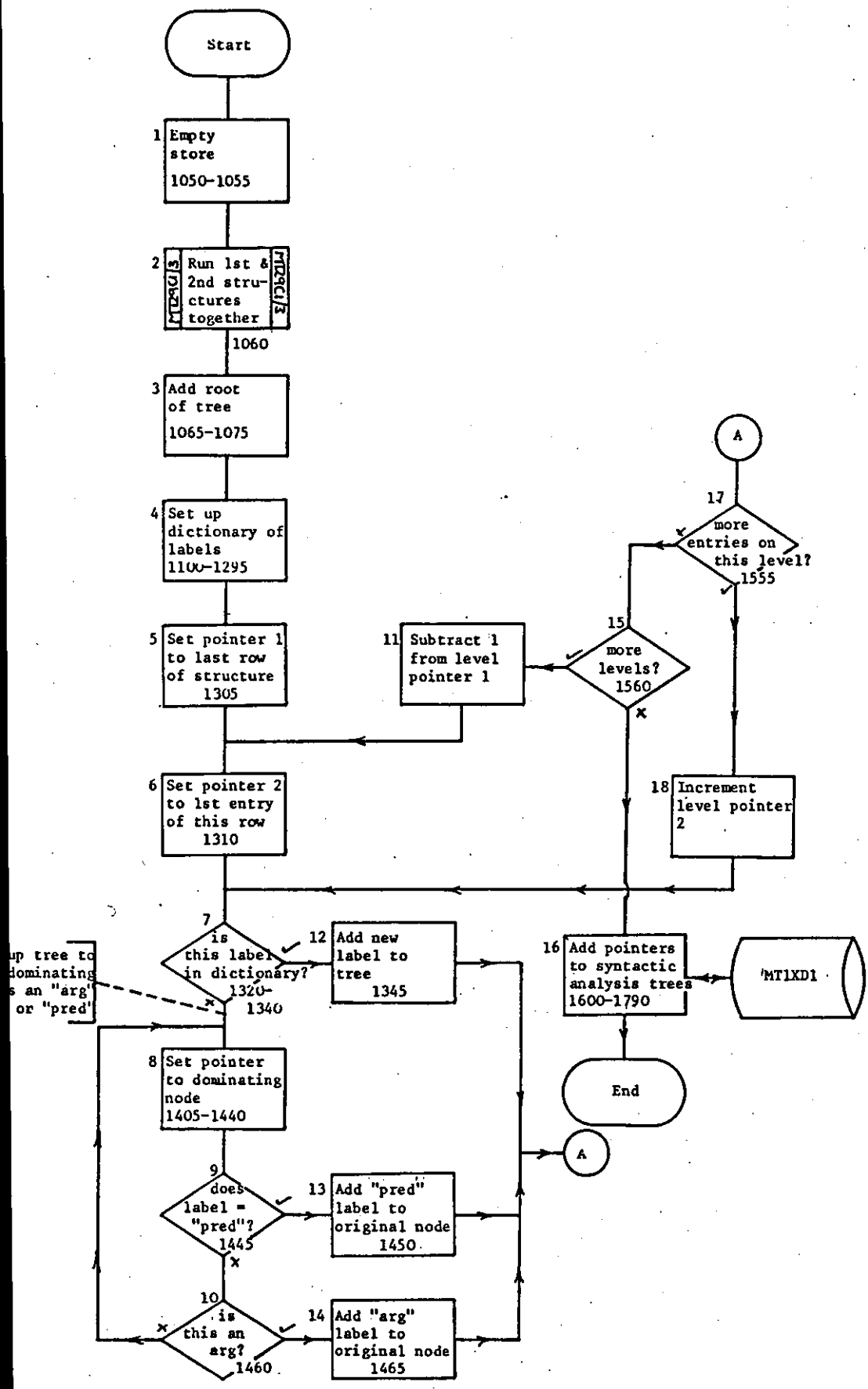

Semantic analysis 3 / unify first and second parses / Sheet 1 of 1

MT29C1/2

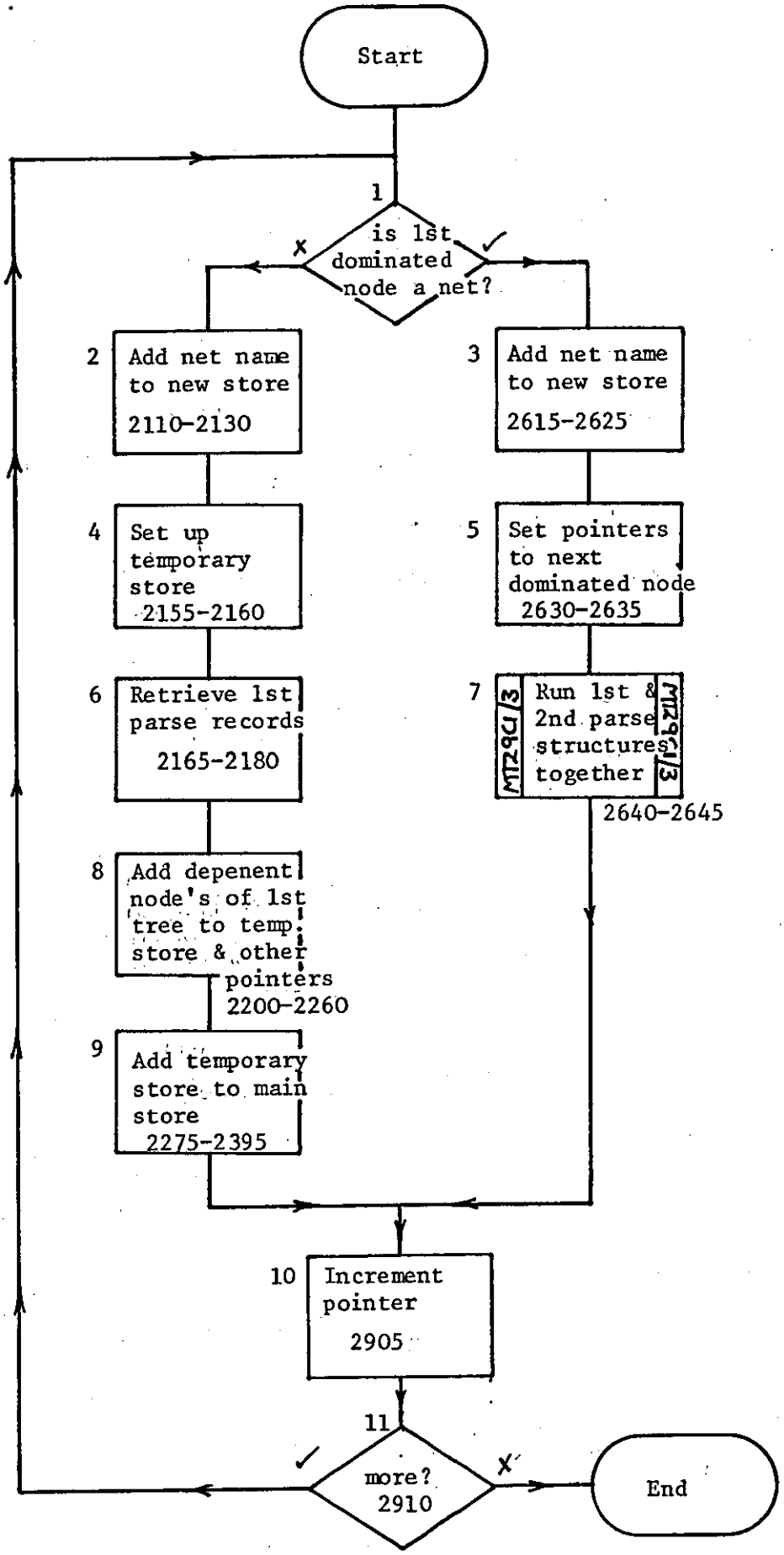

Semantic analysis 3 / run first and second parses together /

Sheet 1 of 1 MT29C1/3

APPENDIX L

PROGRAM MT31C1 (TRANSFER)

Program listing 271

Flowcharts 281

Transfer - MT31C1

```
1 REM English-French transfer - P J Hancox - DLIS - LUT
5 PRINT FSP
7 ON ERROR GOTO 975
10 DIM A$(20),Y$(15),Y1$(15),Y2$(13),D$(3)
20 FILE#2:"MT3XD1",2771
99
100 'reading PRECIS manipulation coding
102 GOSUB 400
105 SCRATCH#2
110 MARGIN#2:MRG(1)
120 WRITE#2:ENC$(6,2)&ENC$(6,2)&ENC$(0,2)&ENC$(0,2)
125 RESET#1:1
130 FOR A=1 TO 7
135  READ#1:A$
140  WRITE#2:A$
143 NEXT A
145 A=8+LEN(A$)
146 RESET#1:0
147 READ#1:A$(0)
148 A$(0)=ENC$(A-1,2)&SUB$(A$(0),3,4)&ENC$(0,2)&ENC$(0,2)
149 'A$(0) holds recs processed/total recs/TLtheme rec/TLcontrol rec
150 'read records - theme by theme
155 RESET#1:A
160 READ#1:A$(1)
170 FOR B=2 TO DEC(SUB$(A$(1),1,2))
175  READ#1:A$(B)
180 NEXT B
185 A$(0)=RPL$(A$(0),ENC$(DEC(SUB$(A$(0),1,2))+DEC(A$(1)),2),1)
190 FILE#1:"MTENFR",2771
195 GOTO 500
199
300 'SUBROUTINE - getting synactic parses if necessary
303 A$(0)=SUB$(A$(0),1,10)&ENC$(0,2)&ENC$(0,2)
305 FILE#1:"MT1XD1",2771
315 B=DEC(SUB$(A$(A+1),1,2))
320 IF B=0 THEN 350
325 RESET#1:B
330 READ#1:A$
335 A$(A+1)=A$(A+1)&SEG$(A$,3,LEN(A$))
340 B=DEC(SUB$(A$,1,2))
345 GOTO 320
350 A$(A+1)=SEG$(A$(A+1),3,LEN(A$(A+1)))
355 FILE#1:"MTENFR",2771
360 RETURN
399
400 'read dictionary keys
403 IF LEN(D$(0))>0 THEN 500
405 MAT D$=NUL$
410 FILE#1:"MTEFH1",2771
415 RESET#1:0
420 READ#1:D$(0)
422 READ#1:D$(1)
425 READ#1:A$
427 D$(1)=D$(1)&A$
430 READ#1:D$(2) 'chars
```

Transfer - MT31C1

```
435 READ#1:A$
440 D$(3)=D$(3)&A$
445 IF MORE#1 THEN 435
449
450 'read grammar
452 X=1
455 G$=GAP$(MRG(1)*LOF(1)-1)
460 FILE#1:"MTEFG1",2771
465 RESET#1:1 'from where to start to load records
467 READ#1:A$
470 IF DEC(SUB$(A$,1,2))+2=LEN(A$) THEN 487
475 READ#1:B$
480 A$=A$&B$
485 GOTO 470
487 G$=RPL$(G$,"|"&SEG$(A$,3,LEN(A$)),X)
488 X=X+LEN(A$)-1
490 IF MORE#1 THEN 467
495 G$=SUB$(G$,1,X-1)&"|"
497 FILE#1:"MT1XD1",2771
498 RETURN
499
500 'go through each text
505 A$(0)=RPL$(A$(0),ENC$(LOF(2),2),7) 'theme record
510 RESET#2:LOF(2)
515 WRITE#2:ENC$(0,2)
525 A=2 'downward text
526 GOSUB 300
527 A$(0)=RPL$(A$(0),ENC$(LOF(2),2),9) 'individual control
528 RESET#2:LOF(2)
529 WRITE#2:"D"&ENC$(LOF(2),2)
530 GOSUB 2000
535 A=5 'upward text
536 GOSUB 300
537 A$(0)=RPL$(A$(0),ENC$(LOF(2),2),9) 'individual control
538 RESET#2:LOF(2)
539 WRITE#2:"U"&ENC$(LOF(2),2)
540 GOSUB 2000
550 'dates
555 IF DEC(SUB$(A$(8),1,2))=0 THEN 575 'name
560 FOR A=9 TO 8+((DEC(SUB$(A$(8),1,2)))*3) STEP 3
562  A$(0)=RPL$(A$(0),ENC$(LOF(2),2),9) 'individual control
563  RESET#2:LOF(2)
564  WRITE#2:"d"&ENC$(LOF(2),2)
565  GOSUB 4000 'dates
570 NEXT A
575 'o & n
580 A=9+((DEC(SUB$(A$(8),1,2)))*3)
585 IF DEC(SUB$(A$(A),1,2))=0 THEN 605
590 FOR A=A+1 TO A+((DEC(SUB$(A$(A),1,2)))*3) STEP 3
591  GOSUB 300
592  A$(0)=RPL$(A$(0),ENC$(LOF(2),2),9) 'individual control
593  RESET#2:LOF(2)
594  WRITE#2:"o"&ENC$(LOF(2),2)
595  GOSUB 2000
600 NEXT A
```

Transfer - MT31C1

```
605 'lead only isn't used in Eng-Fre
610 're-write control record
615 RESET#2:DEC(SUB$(A$(0),7,2))
620 READ#2:A$
625 RESET#2:DEC(SUB$(A$(0),7,2))
630 WRITE#2:ENC$(LOF(2)-DEC(SUB$(A$,1,2))-1,2)
640 A=DEC(SUB$(A$(0),1,2))
699
700 'get next theme - if any
720 IF DEC(SUB$(A$(0),3,2))<=DEC(SUB$(A$(0),1,2)) THEN 800 'done
725 A=DEC(SUB$(A$(0),1,2))+1
730 MAT A$=NUL$
735 A$(0)=RPL$(A$(0),ENC$(0,2)&ENC$(0,2),7)
737 FILE#1:"MT1XD1",2771
740 GOTO 150
799
800 'chain
805 IF X5>0 THEN 815
810 CHAIN "MT43C1,2771"
815 CHAIN "MT41C1,2771"
899
975 'errors
980 A=FNZ(ENC$(ERL,4)&ENC$(ERR,2))
985 A=FNZ(ENC$(X,4)&ENC$(X1,2)&A$)
999
2000 'processing text (ie not dates)
2005 'set pointers
2020 MAT Y2$=NUL$
2025 Y2$(0)="7"
2100 'first put single structure into Y$() & Y1$()
2105 MAT Y$=NUL$
2110 MAT Y1$=NUL$
2115 Y$(0)=Y1$(0)=""
2117 C=0 'pointer to length of text
2120 X=POS(A$(A+1),"#|",1) 'end of tree & data
2125 X2=1 'pointer to length of this text
2130 X1=POS(SUB$(A$(A+1),1,X),"##",X2) 'end of individual row
2135 IF X1>0 THEN 2145
2140 X1=X 'set to end of tree
2145 ON VAL(SUB$(A$(A+1),X2+1,1)) GOTO 2150,2160
2150 Y1$(UPK(SUB$(A$(A+1),X2+2,1)))=SEG$(A$(A+1),X2+3,X1-1)
2155 GOTO 2165
2160 Y$(UPK(SUB$(A$(A+1),X2+2,1)))=SEG$(A$(A+1),X2+3,X1-1)
2165 IF X1=X THEN 2180 'no more
2170 X2=X1+1 'reset pointer to tree
2175 GOTO 2130 'next row
2180 A$(A+1)=SEG$(A$(A+1),X+2,LEN(A$(A+1)))
          'reset pointer to next tree
2199
2200 'decompose trees
2203 X1=1 'pointer to each individual item
2204 C=DEC(SUB$(A$(0),11,2))
2205 X=2 'first row to work on
2207 X2=VAL(Y2$(0)) 'used throughout recursive function calls
2210 Y2$(X2)="{"&SUB$(Y$(X),X1,4)&PAK$(0,1)&PAK$(0,1)&ENC$(0,2)
```

Transfer - MT31C1

```
2212 X3=FND(DEC(SUB$(Y$(X),X1+14,2)),DEC(SUB$(Y$(X),X1+16,2)))
2215 Y2$(X2)=Y2$(X2)&"}"
2217 IF X1+22>LEN(Y$(X)) THEN 2227
2220 X1=X1+22
2222 Y2$(0)=STR$(X2+1)
2225 GOTO 2207
2227 A$(0)=RPL$(A$(0),ENC$(C,2)&ENC$(C,2),11)
2229
2230 'place semantic info on NPs & VPs
2231 X2=7
2232  X1=2 'first label
2235  ON POS("VN",SUB$(Y2$(X2),X1,1),1)+1 GOTO 2285,2237,2242
2237  X3=POS(Y2$(X2),"ve  ",X1) 'NP
2240  GOTO 2250
2242  X3=X4=0
2243  X4=POS(Y2$(X2),"no  ",X1)\ GOSUB 2247 'NP
2244  X4=POS(Y2$(X2),"np  ",X1)\ GOSUB 2247 'NP
2245  X4=POS(Y2$(X2),"nn  ",X1)\ GOSUB 2247 'NP
2246  GOTO 2250
2247  IF X4=0 RETURN
2248  IF X3=0 THEN 2249\ IF X4>X3 RETURN
2249  X3=X4\RETURN
2250  'copy semantic info
2252  Y2$(X2)=RPL$(Y2$(X2),SUB$(Y2$(X2),X3+5,3),X1+5)
2254  IF UPK(SUB$(Y2$(X2),X3+4,1))>0 THEN 2270 'find op loc
2256  X3=X3-1
2258  IF X3=X1+8 THEN 2275 'no op present
2260  IF SUB$(Y2$(X2),X3,1)<>"+" THEN 2254
2262  X3=X3-8
2265  GOTO 2254
2267
2270  'copy op loc
2272  Y2$(X2)=RPL$(Y2$(X2),SUB$(Y2$(X2),X3+4,1),X1+4)
2274
2275  'increment pointers
2277  X1=X1+8
2280  GOTO 2287
2285  X1=X1+1
2287  IF X1>LEN(Y2$(X2)) THEN 2295
2290  GOTO 2235
2295 X2=X2+1
2297 IF X2<=VAL(Y2$(0)) THEN 2232
2299
2300 'search
2302 MAT Y$=NUL$
2303 MAT Y1$=NUL$
2304 Y$(0)=Y1$(0)=""
2305 'first re-write decomposed tree as:
2306 'a) rule
2307 'b) text in dictionary key format
2310 C=7 'row of Y2$() to be worked on
2325 'looping part of routine
2330 X=1 'first label
2335 IF OCC("{}+",SUB$(Y2$(C),X,1))=0 THEN 2375
2340 Y2$(1)=Y2$(1)&SUB$(Y2$(C),X,1)
```

Transfer - MT31C1

```
2345 X=X+1
2350 GOTO 2500 'end reached
2375 'is this a net
2380 IF SUB$(Y2$(C),X,1)<"A" THEN 2425
2385 IF SUB$(Y2$(C),X,1)>"Z" THEN 2425
2390 Y2$(1)=Y2$(1)&SUB$(Y2$(C),X,4)
2395 X=X+8
2400 GOTO 2500 'end reached
2425 'this is a unit
2430 'structure of a unit is:
2435 'label (4 chars)
2436 'semantic info (4 chars)
2437 '"+"
2438 'lexical unit
2440 Y2$(1)=Y2$(1)&SUB$(Y2$(C),X,4)&"{*}" 'add to rule
2445 X=X+9 'this sets it to start of lexical unit
2450 IF POS(Y2$(C),"+",X)=0 THEN 2460
2455 IF POS(Y2$(C),"+",X)<POS(Y2$(C),"}",X) THEN 2470
2460 X1=POS(Y2$(C),"}",X)-1
2465 GOTO 2475
2470 X1=POS(Y2$(C),"+",X)-1
2475 B$=SEG$(Y2$(C),X,X1) 'create key
2480 IF POS(B$,"%",1)=0 THEN 2495
2485 B$=RPL$(B$,"#",POS(B$,"%",1))
2490 GOTO 2480
2495 Y2$(4)=Y2$(4)&B$&"%["&SUB$(Y2$(C),X-9,2)&"]"
2497 X=X1+1
2499
2500 'is end of decomposed tree reached
2505 IF X<=LEN(Y2$(C)) THEN 2335
2524
2525 'now search
2530 X=1 'start of text
2535 'loop for getting each portion of text
2540 X1=LEN(Y2$(4)) 'extreme end of text
2545 IF X1-X>DEC(SUB$(D$(0),3,2)) THEN 2700'key not found (cos too lo
          ng)
2550 A$=ENC$(FNH(X,X1),2) 'create hash code
2555 'search dict - simple version
2560 X2=0 'start of dict -1
2565 X2=POS(D$(3),A$,X2+1)
2570 IF X2=0 THEN 2700
2575 IF MOD(X2+3,4)=0 THEN 2850 'found
2580 GOTO 2565
2599
2700 'key not found - try to reduce
2705 X2=X3=X
2710 X3=POS(SUB$(Y2$(4),1,X1-1),"]",X3+1)
2715 IF X3=0 THEN 2730
2720 X2=X3
2725 GOTO 2710
2730 IF X2=X THEN 2750 'failure with this start
2735 X1=X2
2740 GOTO 2545 'now search dict file (in core)
2749
```

Transfer - MT31C1

```
2750 'complete failure on this level
2755 IF LEN(Y2$(6))>0 THEN 2765 'there is something to backtrack over
2760 A$=SEG$(Y2$(4),X,LEN(Y2$(4)))\X=CUL\X1=552\ GOTO 985
           'nothing left
2765 X=DEC(SUB$(Y2$(6),LEN(Y2$(6))-7,2)) 'start of text
2770 X1=DEC(SUB$(Y2$(6),LEN(Y2$(6))-5,2)) 'end of text
2775 Y2$(5)=SUB$(Y2$(5),1,DEC(SUB$(Y2$(6),LEN(Y2$(6))-3,2))-1)
           'TL text &
2780 Y2$(2)=SUB$(Y2$(2),1,DEC(SUB$(Y2$(6),LEN(Y2$(6))-1,2))-1)'catego
          ries
2785 Y2$(6)=SUB$(Y2$(6),1,LEN(Y2$(6))-8)
           'wipe this entry out of the store
2790 GOTO 2700 'to key not found - try to reduce
2824
2850 'key found - is this the correct record
2855 RESET#1:DEC(SUB$(D$(3),X2+2,2))
2860 READ#1:A$
2865 'concatenate trailers (if necessary)
2870 IF DEC(SUB$(A$,LEN(A$)-1,2))=0 THEN 3000
2875 'binary search
2880 X3=0 'search area start
2885 X4=LOF(1) 'search area end
2890 RESET#1:INT((X3+X4)/2)
2895 READ#1:B$
2900 IF SUB$(B$,1,2)=SUB$(A$,LEN(A$)-1,2) THEN 2950 'success
2905 IF SUB$(B$,1,2)>SUB$(A$,LEN(A$)-1,2) THEN 2930 'in lower half
2910 'in upper half
2915 IF X3=(INT((X3+X4)/2))+1 THEN 2960 'failure to find trailer
2920 X3=(INT((X3+X4)/2))+1
2925 GOTO 2890
2930 'in lower half
2935 IF X4=INT((X3+X4)/2) THEN 2960 'failure to find trailer
2940 X4=INT((X3+X4)/2)
2945 GOTO 2890
2950 A$=SUB$(A$,1,LEN(A$)-4)&SEG$(B$,3,LEN(B$))
2955 GOTO 2870
2960 'failure to find trailers
2965 IF POS(SUB$(A$,1,LEN(A$)-4)," ",1)=0 THEN 2975
2970 A$=SUB$(A$,1,POS(A$," ",1))\X=CUL\X1=553\ GOTO 985
2975 A$=SUB$(A$,1,LEN(A$)-4)\X=CUL\X1=553\ GOTO 985
2999
3000 'whole record retrieved - compare
3005 IF X1-X+2>LEN(A$) THEN 3015
3010 IF SEG$(Y2$(4),X,X1)&" "=SUB$(A$,1,X1-X+2) THEN 3025
3015 A$=SUB$(D$(3),X2,2)
3020 GOTO 2565 'continue search
3024
3025 'success - add to store
3030 Y2$(6)=Y2$(6)&ENC$(X,2)&ENC$(X1,2) 'start & end of text
3035 Y2$(6)=Y2$(6)&ENC$(LEN(Y2$(5)),2)&ENC$(LEN(Y2$(2)),2)
3040 'has this negated an unfound lexical unit
3045 IF LEN(Y2$(3))=0 THEN 3075
3050 IF DEC(SUB$(Y2$(3),1,2))>X1 THEN 3075
3055 Y2$(3)=""
3075 'get TL text & labels
```

Transfer - MT31C1

```
3080 X2=LEN(Y2$(5))
3083 Y2$(5)=Y2$(5)&SEG$(A$,POS(A$," ",1)+4,POS(A$," ",POS(A$," ",1)+4
          )-1)
3085 X2=POS(Y2$(5),"%[",X2+1) 'find label
3090 IF X2=0 THEN 3105
3095 Y2$(2)=Y2$(2)&"+"&SUB$(Y2$(5),X2+2,2)&GAP$(2)
3100 GOTO 3085
3105 IF SUB$(Y2$(2),1,1)<>"+" THEN 3125
3110 Y2$(2)=SEG$(Y2$(2),2,LEN(Y2$(2)))
3124
3125 'tis done - now retrieve rest of text
3130 X=X1+1
3135 IF X1<LEN(Y2$(4)) THEN 2535
3199
3200 'test grammar & add test
3215 X=POS(G$,"|"&Y2$(2)&"=",1) 'find start of rule
3220 IF X>0 THEN 3250
3235 A$=Y2$(2)&"="\X=CUL\X1=551\ GOTO 985
3249
3250 'success
3255 Y2$(6)=SEG$(G$,POS(G$,"=",X)+1,POS(G$,"|",X+1)-1)
3260 'rewrite decomposed trees
3265 X=POS(Y2$(6),"{*}",1)
3270 IF X=0 THEN 3300
3272 IF SUB$(Y2$(5),1,1)<>"*" THEN 3275
3273 Y2$(5)="*"&Y2$(5)
3275 X1=POS(Y2$(5),"%[",1)-1
3280 Y2$(6)=SEG$(Y2$(6),1,X)&SUB$(Y2$(5),1,X1)
          &SEG$(Y2$(6),X+2,LEN(Y2$(6)))
3285 Y2$(5)=SEG$(Y2$(5),X1+6,LEN(Y2$(5)))
3290 GOTO 3265
3299
3300 'run semantic info in
3305 Y2$(5)=Y2$(C) 'SL tree
3310 X=1 'TL label
3315 X1=1 'SL label
3320 X2=POS(Y2$(5),SUB$(Y2$(6),X,4),X1) 'find TL label in SL tree
3325 IF X2=0 THEN 3360 'this isn't present
3330 Y2$(6)=SUB$(Y2$(6),1,X+3)&SUB$(Y2$(5),X2+4,4)
          &SEG$(Y2$(6),X+4,LEN(Y2$(6)))
3349
3350 'increment pointers
3355 X1=X2+1 'SL label
3360 'TL label
3365 IF SUB$(Y2$(6),X,1)<"A" THEN 3390 'a terminal
3370 IF SUB$(Y2$(6),X,1)>"Z" THEN 3390 'a terminal
3375 'a net
3380 X=X+8
3385 GOTO 3400
3390 'a terminal
3395 X=POS(Y2$(6),"}",X+8)
3400 IF X>=LEN(Y2$(6)) THEN 3420 'end
3405 IF OCC("{}+",SUB$(Y2$(6),X,1))=0 THEN 3320 'done
3410 X=X+1
3415 GOTO 3400
```

Transfer - MT31C1

```
3420 X=1 'add dummy semantic info to some units
3422  IF SUB$(Y2$(6),X,1)<"A" THEN 3430
3424  IF SUB$(Y2$(6),X,1)>"Z" THEN 3430
3426  IF SUB$(Y2$(6),X+4,2)<>"+{" THEN 3445
3428  GOTO 3440
3430  X$="pr  ab  ad  no  nn  np  co  ve  de  "
3435  IF MOD(POS(X$,SUB$(Y2$(6),X,4),1)+3,4)<>0 THEN 3445
3437  IF SUB$(Y2$(6),X+4,1)<>"{" THEN 3445
3440  X$=PAK$(0,1)&ENC$(0,2)&PAK$(0,1)
3442  Y2$(6)=SUB$(Y2$(6),1,X+3)&X$&SEG$(Y2$(6),X+4,LEN(Y2$(6)))
3445 X=X+1
3447 IF X<LEN(Y2$(6))-4 THEN 3422
3449
3450 'move tree store
3455 Y2$(C)=Y2$(6)
3460 'get next decomposed tree
3465 IF C+1>VAL(Y2$(0)) THEN 3550 'no more structures to do
3470 C=C+1 'get next tree
3475 FOR X=1 TO 6 'clear work area
3480  Y2$(X)=""
3485 NEXT X
3490 GOTO 2325
3549
3550 'write individual packet to TL file
3555 RESET#2:LOF(2)
3560 X=LOF(2)
3565 WRITE#2:ENC$(0,2)
3570 C=7
3575  Y2$(C)=ENC$(LEN(Y2$(C)),2)&Y2$(C)
3577  IF OCC(Y2$(C),"prep(")=0 THEN 3580
3578  X5=1
3580  WRITE#2:SUB$(Y2$(C),1,MRG(2))
3585  Y2$(C)=SEG$(Y2$(C),MRG(2)+1,LEN(Y2$(C)))
3590  IF LEN(Y2$(C))>0 THEN 3580
3595 C=C+1
3597 IF C<=VAL(Y2$(0)) THEN 3575
3600 RESET#2:X
3605 WRITE#2:ENC$(LOF(2)-X-1,2)
3649
3650 'get next structure
3655 IF LEN(A$(A+1))>0 THEN 2020 'more structures
3660 'rewrite control record
3665 RESET#2:DEC(SUB$(A$(0),9,2))
3670 READ#2:A$
3675 RESET#2:DEC(SUB$(A$(0),9,2))
3680 WRITE#2:RPL$(A$,ENC$(LOF(2)-DEC(SUB$(A$,2,2))-1,2),2)
3685 A$(A)=A$(A+1)=A$(A+2)=""
3690 RETURN 'done
3999
4000 'dates
4010 B$=""
4100 'load dictionary
4105 FILE#1:"MTEFd1",2771
4110 RESET#1:0
4115 X=0
```

Transfer - MT31C1

```
4120 READ#1:Y$(X)
4125 IF END#1 THEN 4140
4130 X=X+1
4135 GOTO 4120
4140 FILE#1:"MTENFR",2771 'reload text dictionary
4149
4150 'matching
4151 'format of rule = English| French - eg  A.D.| ap. J.-C.
4155 'go through text
4160 B=1
4165  IF SUB$(A$(A),B,1)=" " THEN 4265
4170  IF OCC("0123456789-",SUB$(A$(A),B,1))=0 THEN 4200
4175  B$=B$&SUB$(A$(A),B,1)
4180  GOTO 4265
4199
4200  'look for this text in dict
4205  C=1
4210   X=POS(Y$(C),"|",1)-1
4215   IF SUB$(Y$(C),1,X)=SUB$(A$(A),B,X) THEN 4250
4220  C=C+1
4225  IF C<=VAL(Y$(0)) THEN 4210
4230  A$=SEG$(A$(A),B,LEN(A$(A)))\X=CUL\X1=562\ GOTO 985'No entry
4249
4250  'add text
4255  B$=B$&SEG$(Y$(C),X+2,LEN(Y$(C)))
4260  B=B+X-1
4265 B=B+1
4270 IF B<LEN(A$(A)) THEN 4165
4299
4300 'clean string
4305 B=POS(B$,"  ",1)
4310 IF B=0 THEN 4325
4315 B$=SUB$(B$,1,B)&SEG$(B$,B+2,LEN(B$))
4320 GOTO 4305
4325 B=POS(B$,"- ",1)
4330 IF B>0 THEN 4315
4335 IF SUB$(B$,1,1)<>" " THEN 4350
4340 B$=SEG$(B$,2,LEN(B$))
4349
4350 'add to file
4355 RESET#1:LOF(1)-1
4360 WRITE#2:ENC$(1,2)
4365 WRITE#2:B$
4370 RETURN
6999
7000 DEF FND(X,X1) 'decomposes tree
7100  'go through row
7105  X1=1 'start of row
7110  IF SUB$(Y$(X),X1,1)<"A" THEN 7120
7115  IF SUB$(Y$(X),X1,1)<="Z" THEN 7200
7120  'this is a unit
7125  Y2$(X2)=Y2$(X2)&"+"&SUB$(Y$(X),X1,4) 'add label
7126  X3=DEC(SUB$(Y$(X),X1+18,2))
7127  IF X3<64 THEN 7129 'can be packed into 1
7128  X3=(64-(X3-64))*(-1)
```

Transfer - MT31C1

```
7129  Y2$(X2)=Y2$(X2)&PAK$(X3,1)&SUB$(Y$(X),X1+20,2)
7130  IF OCC(" A",SUB$(A$(A+2),C+1,1))>0 THEN 7142 'no op location
7135  Y2$(X2)=Y2$(X2)&SUB$(A$(A+2),C+1,1) 'copy op location
7140  GOTO 7164
7142  IF OCC("np  no  nn  ",SUB$(Y2$(X2),LEN(Y2$(X2))-6,4))>0
          THEN 7148
7144  Y2$(X2)=Y2$(X2)&PAK$(0,1) 'no op location
7146  GOTO 7164
7148  X3=LEN(Y2$(X2))-7
7150  IF SUB$(Y2$(X2),X3,1)="{" THEN 7144 'no op loc
7152  X3=X3-1
7154  IF X3=1 THEN 7144 'no op loc
7156  IF SUB$(Y2$(X2),X3,1)<>"+" THEN 7150 'no op loc
7158  IF UPK(SUB$(Y2$(X2),X3-1,1))>0 THEN 7163 'found
7160  X3=X3-9
7162  GOTO 7150
7163  Y2$(X2)=Y2$(X2)&SUB$(Y2$(X2),X3-1,1)
7164  X3=LEN(Y2$(X2))
7166  Y2$(X2)=Y2$(X2)&"+"&Y1$(DEC(SUB$(Y$(X),X1+16,2))) 'add text
7170  C=C+(LEN(Y2$(X2))-X3)
7175  IF SUB$(A$(A+2),C+1,1)<>"|" THEN 7185
7180  C=C+1
7185  GOTO 7300
7199
7200  'this is a net
7205  Y2$(X2)=Y2$(X2)&"+{"&SUB$(Y$(X),X1,4)&PAK$(0,1)&ENC$(0,2)
          &PAK$(0,1)
7210  X3=FND(DEC(SUB$(Y$(X),X1+14,2)),DEC(SUB$(Y$(X),X1+16,2)))
7215  Y2$(X2)=Y2$(X2)&"}"
7300  'increment pointer
7305  X1=X1+22
7310  IF X1<LEN(Y$(X)) THEN 7110
7315  LET FND=0
7320 FNEND
7499
7500 DEF FNH(A,B) 'creates hash keys
7505  X2=X3=X4=0
7510  FOR X3=A TO B
7515   X4=POS(D$(2),SUB$(Y2$(4),X3,1),1)
7520   X2=X2+(X4*(DEC(SUB$(D$(1),((X3-A+1)*2)-1,2))))
7525  NEXT X3
7530  LET FNH=MOD(X2,DEC(SUB$(D$(0),1,2)))
7535 FNEND
7599
9000 DEF FNZ(A$) 'error routine
9105  NO ERROR
9110  FILE#1:"ERROR",2771
9120  IF LOF(1)>0 THEN 9135
9125  SCRATCH#1
9130  MARGIN#1:198
9135  RESET#1:LOF(1)
9140  WRITE#1:"MT31C1"&SUB$(A$(0),5,2)&SUB$(A$,1,MRG(1)-8)
9150  CHAIN "MT11C1,2771"
9155 FNEND
9999 END
```

FLOWCHARTS

	Page
Main routine - MT31C1/1	282
Process reading - MT31C1/2	283
Decompose trees - MT31C1/3	284
Search dictionary - MT31C1/4	285
Process date - MT31C1/5	286

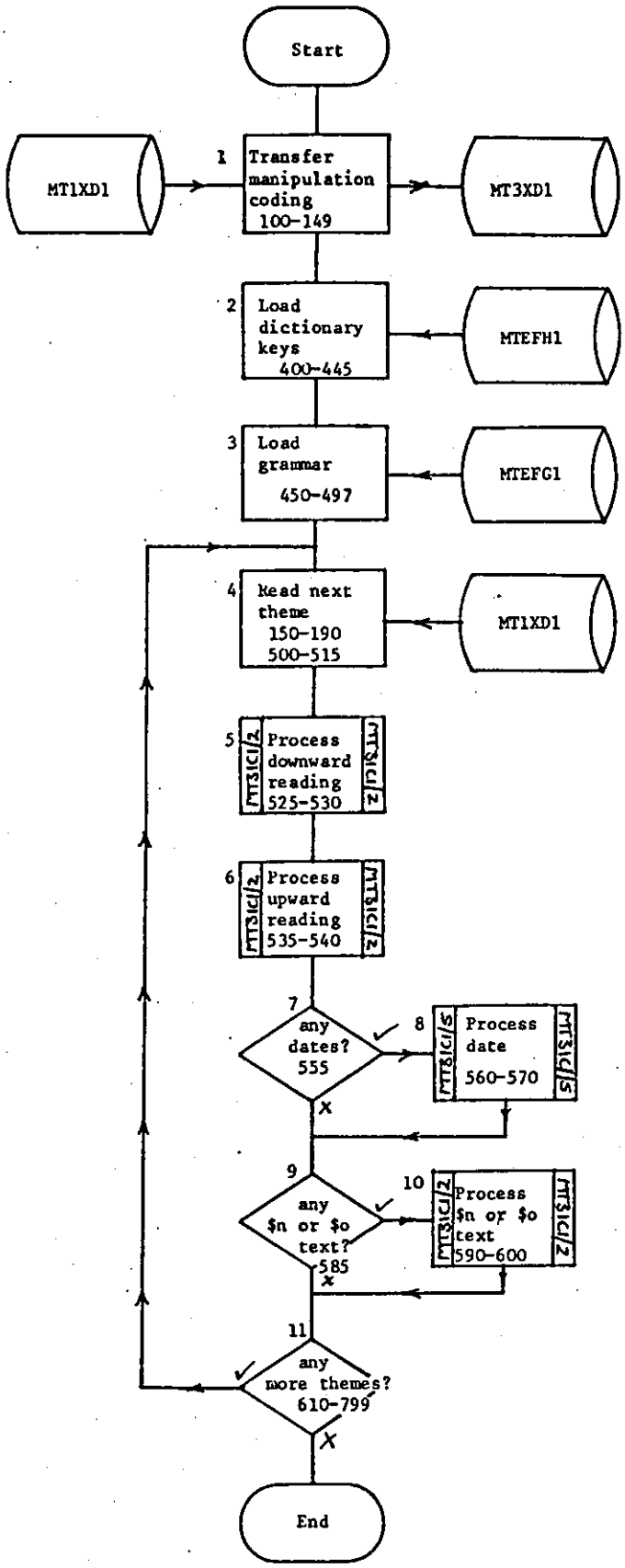

Transfer / main routine / Sheet 1 of 1 / MT31C1/1

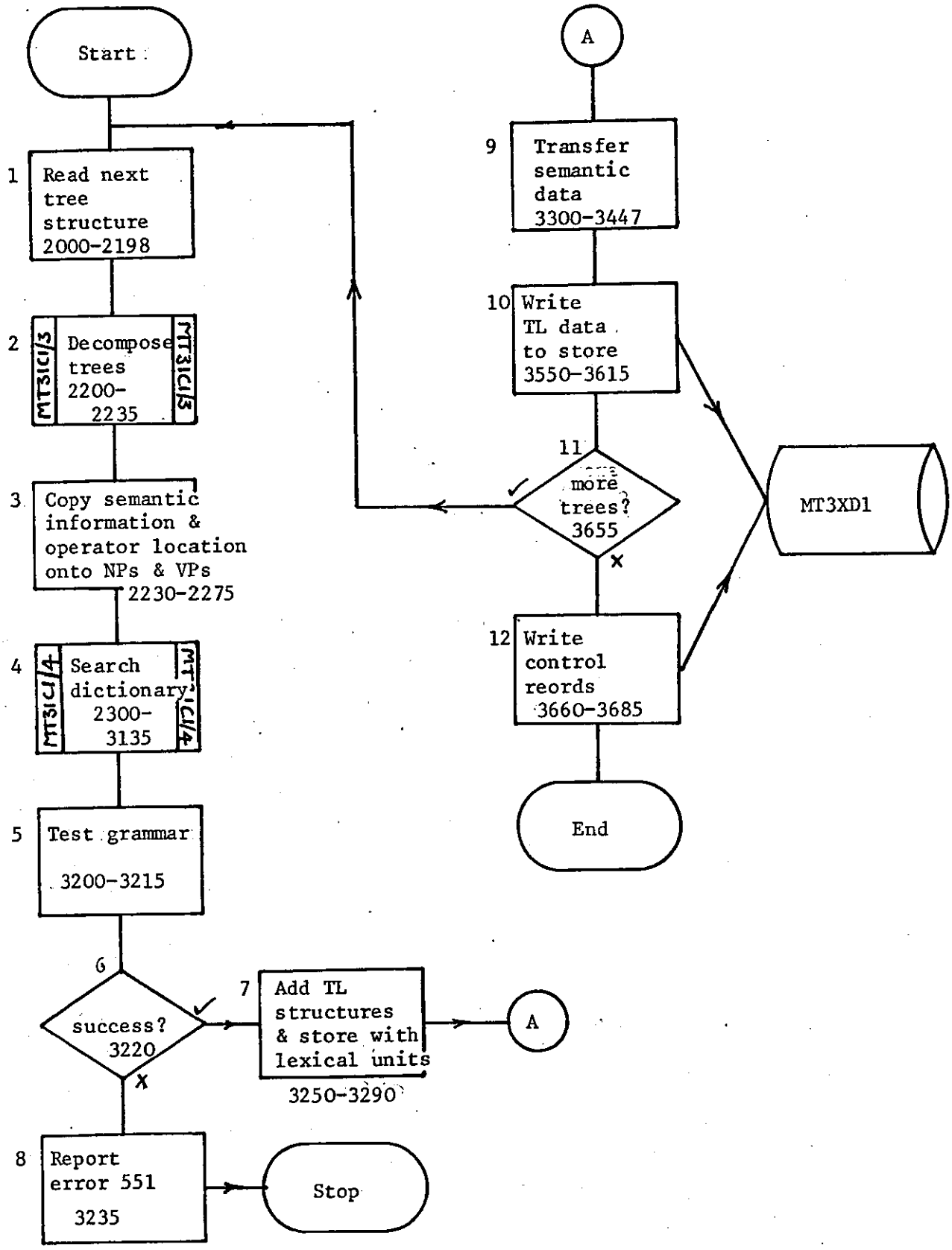

Transfer / process reading / Sheet 1 of 1 MT31C1/2

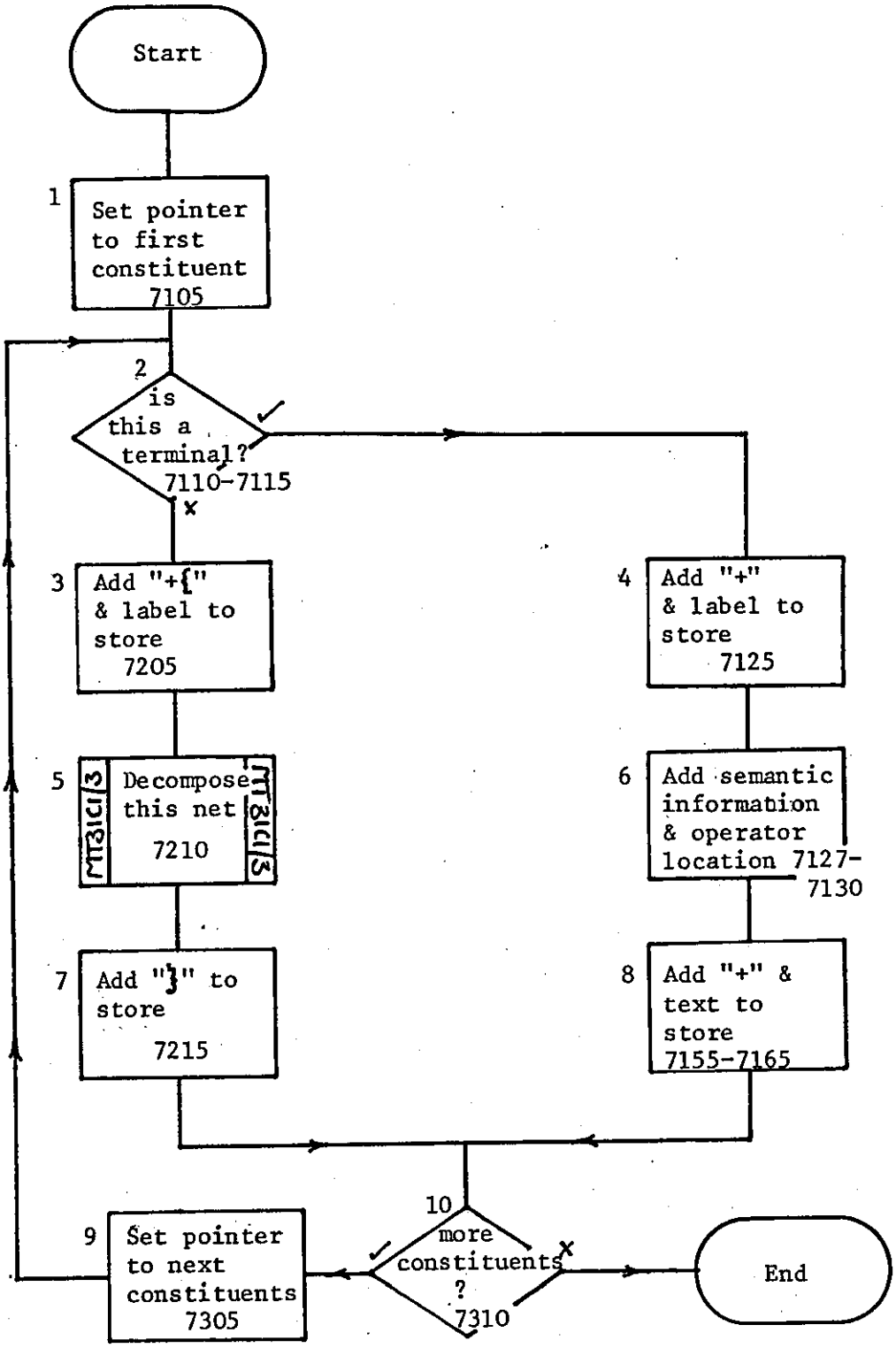

Transfer / decompose trees / Sheet 1 of 1 MT31C1/3

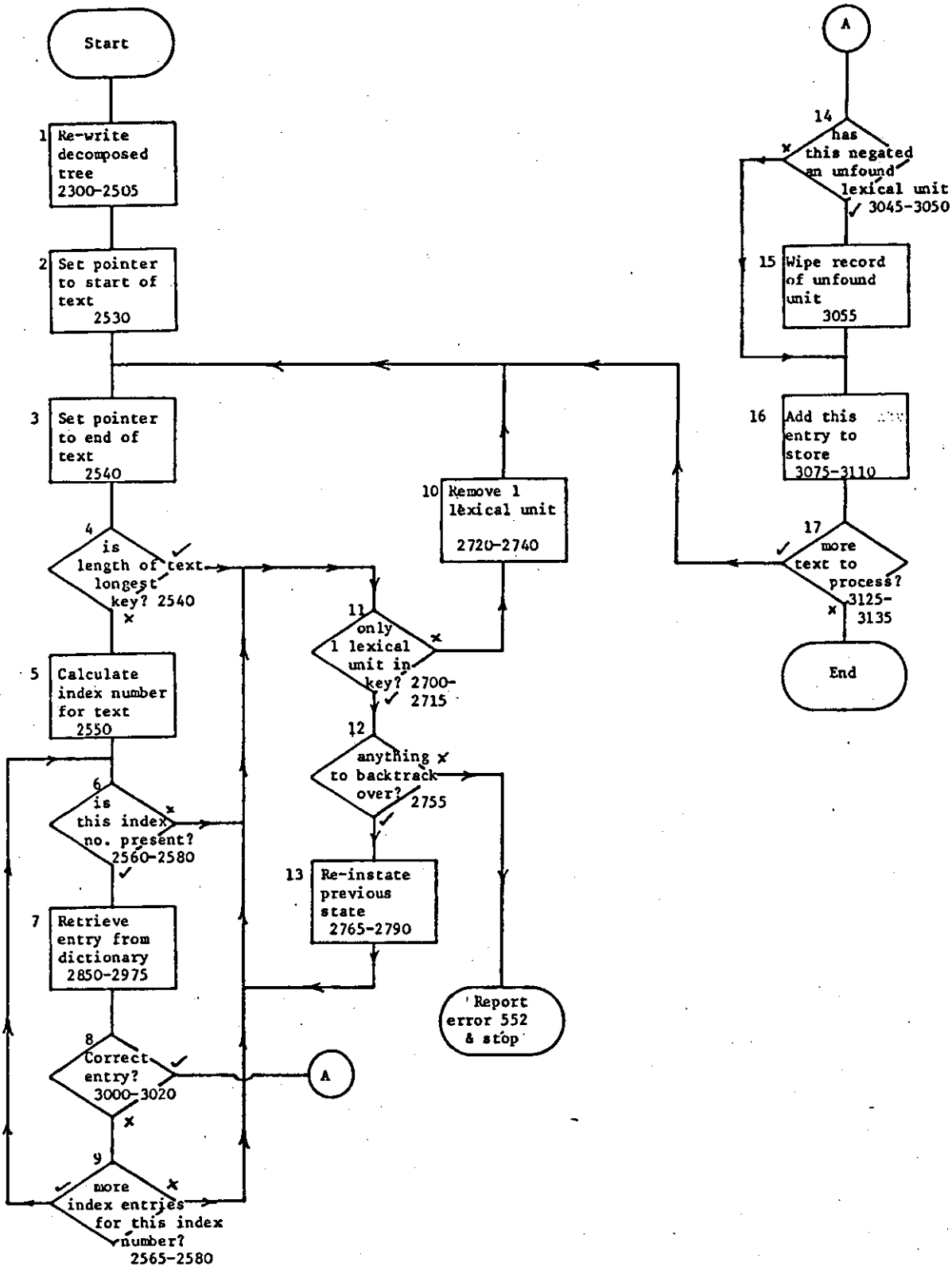

Transfer / search dictionary / Sheet 1 of 1 / MT31C1/4

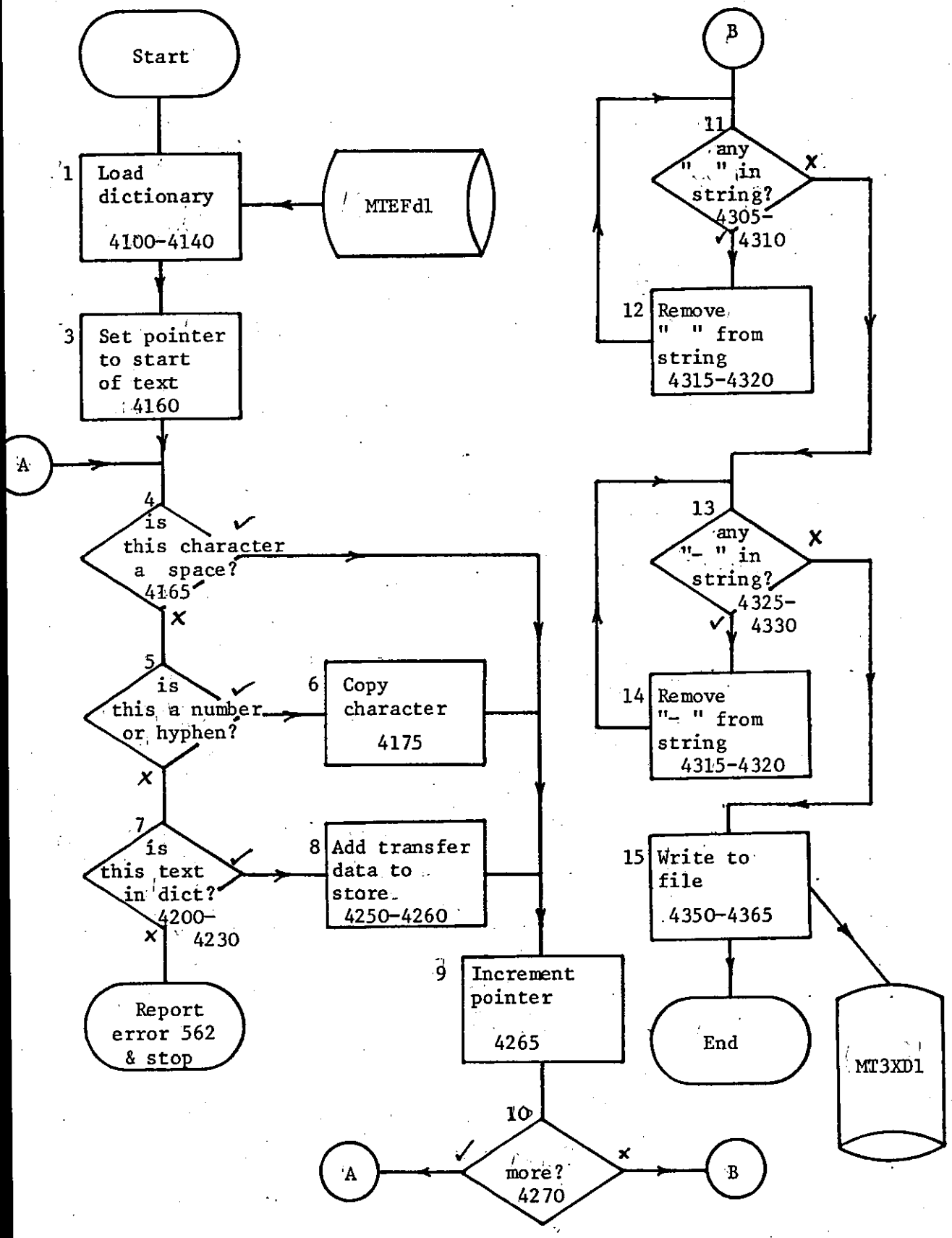

Transfer / process date / Sheet 1 of 1 MT31C1/5

APPENDIX M

PROGRAM MTGCC1 (CONTRACT GRAMMAR)

Program listing 288

Contract grammar - MTGCC1

```
1 REM Synthesis grammar reducing - P J Hancox - DLIS - LUT
10 DIM L$(50),C$(10),K$(20)
99
100 'control dictionary
105 C$(0)="5"
110 C$(1)=" IF |~"
115 C$(2)="OR|^"
120 C$(3)=" THEN |$"
125 C$(4)="ELSE|%"
130 C$(5)="AND|&"
199
200 'conditions
205 K$(0)="12"
210 K$(1)="VWL=|3="
215 K$(2)="vwl=|3="
220 K$(3)="VWL<>|3<"
225 K$(4)="vwl<>|3<"
230 K$(5)="NUM=|1="
235 K$(6)="num=|1="
240 K$(7)="NUM<>|1<"
245 K$(8)="num<>|1<"
250 K$(9)="GEN=|2="
255 K$(10)="gen=|2="
260 K$(11)="GEN<>|2<"
265 K$(12)="gen<>|2<"
299
300 'LHS dictionary
305 L$(0)="22"
310 L$(1)="LOAD DICT|D"
315 L$(2)="DICT|d"
320 L$(3)="SUB TREE|t"
325 L$(4)="LOAD NEXT -TL-TREE|T"
330 L$(5)="SET UNIT|U"
335 L$(6)="UNIT|u"
340 L$(7)="WRITE TREES|W"
345 L$(8)="LOAD SEM-TREE|S"
350 L$(9)="SEM-TREE|s"
355 L$(10)="MORE PHRASES|p"
360 L$(11)="SET PHRASE|p"
365 L$(12)="MORE-TL-TREES|m"
370 L$(13)="LOAD RECORDS|R"
375 L$(14)=" CHAIN |C="
380 L$(15)=" GOTO |G "
385 L$(16)="PUT|P"
390 L$(17)="ERROR|E"
395 L$(18)="TREE=|t="
400 L$(19)="*END|*"
405 L$(20)="LOAD GRAMMAR|g"
410 L$(21)="MORE-PHRASES|p"
415 L$(22)="PHRASE|P"
600 'sorts L$ into order of longest rules
605 FOR X=1 TO VAL(L$(0))-1
610  X1=0
615   FOR X2=1 TO VAL(L$(0))-1
620    IF POS(L$(X2),"|",1)>=POS(L$(X2+1),"|",1) THEN 645
```

Contract grammar - MTGCC1

```
625    X$=L$(X2)
630    L$(X2)=L$(X2+1)
635    L$(X2+1)=X$
640    X1=1
645   NEXT X2
650  IF X1=0 THEN 700
655 NEXT X
699
700 'files
705 PRINT CHR$(31)&LIN$(2)&"Please input source file";
710 INPUT S$,S
715 FILE#1:S$,S
720 PRINT LIN$(2)&"File ";S$;",";STR$(S);" successfully opened"
725 PRINT LIN$(2)&"Please input output file";
730 INPUT O$,O
735 FILE#2:O$,O
740 PRINT LIN$(2)&"File ";O$;",";STR$(O);" successfully opened"
745 SCRATCH#2
750 MARGIN#2:MRG(1)
755 'read file
760 A$=B$=""
765 READ#1:B$
770 A$=A$&B$
775 IF MORE#1 THEN 765
780 B$=""
999
1000 'do conditions
1005 IF OCC(A$,"[")=OCC(A$,"]") THEN 1025
1010 B$="There are unequal numbers of `[(' and `]'"
1015 GOSUB 7000 'edit
1025 'go through each condition in turn
1030 X=0
1035 X=POS(A$,"[",X+1)
1037 IF X=0 THEN 2000
1040 X1=POS(A$,"]",X+1)
1045 B$=SEG$(A$,X+1,X1-1)&"/"
1050 X2=1
1055 X3=1
1057 IF SUB$(C$,1,1)="$" THEN 1100
1060 C$=SUB$(B$,X2,POS(K$(X3),"|",1)-1)
1062 IF C$=SUB$(K$(X3),1,POS(K$(X3),"|",1)-1) THEN 1085
1065 X3=X3+1
1070 IF X3<=VAL(K$(0)) THEN 1060
1075 B$=SUB$(B$,1,X2-1)&"$5="&SEG$(B$,X2,LEN(B$))
1080 GOTO 1100
1085 X4=POS(K$(X3),"|",1)+1
1087 X$="$"&SEG$(K$(X3),X4,LEN(K$(X3)))
1090 B$=SUB$(B$,1,X2-1)&X$&SEG$(B$,X2+X4-2,LEN(B$))
1100 X2=POS(B$,"/",X2)+1
1103 IF X2=1 THEN 1110
1105 IF X2<LEN(B$)-1 THEN 1055
1110 X2=POS(B$,"//",1)
1115 IF X2=0 THEN 1130
1120 B$=SUB$(B$,1,X2)&SEG$(B$,X2+2,LEN(B$))
1125 GOTO 1110
```

Contract grammar - MTGCC1

```
1130 A$=SUB$(A$,1,X)&B$&SEG$(A$,X1,LEN(A$))
1135 X=X1
1140 GOTO 1035
1999
2000 'conditions
2005 X=1
2010 X1=POS(A$," "&SUB$(C$(X),1,POS(C$(X),"|",1)-1)&" ",1)
2015 IF X1=0 THEN 2035
2020 X2=POS(C$(X),"|",1)
2025 A$=SEG$(A$,1,X1)&SEG$(C$(X),X2+1,LEN(C$(X)))
          &SEG$(A$,X1+X2,LEN(A$))
2030 GOTO 2010
2035 X=X+1
2040 IF X<=VAL(C$(0)) THEN 2010
2049
2050 'LHS
2055 X=1
2060 X=FNI(L$(X))
2065 X=X+1
2070 IF X<=VAL(L$(0)) THEN 2060
2199
3000 'rewrite
3005 RESET#2
3010 WRITE#2:SUB$(A$,1,MRG(2))
3015 A$=SEG$(A$,MRG(2)+1,LEN(A$))
3020 IF LEN(A$)>0 THEN 3010
3025 PRINT LIN$(2)&"Grammar ";O$;",";STR$(0);" written"
3030 S TO P
7000 'edit
7005 PRINT CHR$(31)&B$&LIN$(2)
7010 PRINT A$&LIN$(2)&"Do you wish to edit this";
7015 LINPUT B$
7020 IF OCC("Nn",SUB$(B$,1,1))>0 RETURN
7025 PRINT LIN$(2)&"Please enter old text";
7030 LINPUT B$
7035 IF POS(A$,B$,1)>0 THEN 7050
7040 B$="This does not occur"
7045 GOTO 7060
7050 IF OCC(A$,B$)=1 THEN 7070
7055 B$="This occurs more than once"
7060 PRINT LIN$(2)&CHR$(7)&B$
7065 GOTO 7025
7070 X=POS(A$,B$,1)
7075 X1=LEN(B$)
7099
7100 PRINT LIN$(2)&"Please enter new text";
7105 LINPUT B$
7110 A$=SUB$(A$,1,X-1)&B$&SEG$(A$,X+X1,LEN(A$))
7115 B$=""
7120 GOTO 7005
7999
8000 DEF FNI(X$)
8003  IF LEN(X$)=0 THEN 8030
8005  X1=POS(A$,SUB$(X$,1,POS(X$,"|",1)-1),1)
8010  IF X1=0 THEN 8030
```

Contract grammar - MTGCC1

```
8015  X2=POS(X$,"|",1)
8020  A$=SEG$(A$,1,X1-1)&SEG$(X$,X2+1,LEN(X$))
          &SEG$(A$,X1+X2-1,LEN(A$))
8025  GOTO 8005
8030  LET FNI=X
8035 FNEND
9999 END
```

* * * END OF PRINT * * *

APPENDIX N

PROGRAM MT41C1 (GENERATION 1)

Program listing 293

Flowcharts 309

Generation 1 - MT41C1

```
1 REM Synthesis - P J Hancox - DLIS - LUT
3 PRINT FSP
5 ON ERROR GOTO 50
10 DIM D$(3),Y$(16),Y1$(23),Y2$(20),Y3$(2)
20 FILE#2:"MT3XD1",2771 'TL syntactic structures
45 GOTO 100
49
50 'errors
55 X1=FNZ(ENC$(ERL,4)&ENC$(ERR,2))
99
100  FILE#1:"MTFSC1",2771 ' * * * load grammar
105  G$=GAP$(LOF(1)*MRG(1))
110  X1=1
115  READ#1:X$
120  G$=RPL$(G$,X$,X1)
125  X1=X1+LEN(X$)
130  IF MORE#1 THEN 115
135  G$=SUB$(G$,1,X1)
299
300 X$="S1" 'PROCESS GRAMMAR (first state)
349
350 X1=POS(G$,"("&X$&" ",1) 'find state
360 IF X1>0 THEN 400
365 X1=FNZ(ENC$(CUL,4)&ENC$(581,2)&X$) 'state not found
399
400 'state found - evaluate condition
405 X1=POS(G$," ",X1) 'start of IF /OR/ELSE condition
410 ON POS("~^%",SUB$(G$,X1+1,1),1)+1 GOTO 415,450,450,725
415 X2=CUL\ GOTO 1900
449
450 ' IF /OR (~/^) conditions
455 'LEFT-HAND SIDE MAT CHING
460 X1=X1+3 'start of first condition
465 ON OCC("dsmtup",SUB$(G$,X1,1))+1 GOTO 470,505
470 ON OCC("APT",SUB$(G$,X1,1))+1 GOTO 490,515
490 X2=CUL\ GOTO 1900 'error in grammar
499
500 'choose which conditions
505 ON POS("dsmtup",SUB$(G$,X1,1),1)
          GOSUB 2100,2600,2200,3300,4000,4050
510 GOTO 550
515 ON POS("APT",SUB$(G$,X1,1),1) GOSUB 2700,2850,3200
549
550 'evaluate results of match
555 IF X2>0 THEN 700 'success
560 'fail - so find next OR statement
565 IF OCC(SEG$(G$,X1,POS(G$,")",X1))," ^ ")=0 THEN 580
570 X1=POS(G$," ^ ",X1)
575 GOTO 410 'to state found - evaluate condition
580 IF OCC(SEG$(G$,X1,POS(G$,")",X1))," % ")=0 THEN 595
585 X1=POS(G$," % ",X1)
590 GOTO 410 'to state found - evaluate condition
595 X2=CUL\ GOTO 1900 'error in grammar
699
700 'success - but there are more conditions
```

Generation 1 - MT41C1

```
705 IF OCC(SEG$(G$,X1,POS(G$," $ ",X1))," & ")=0 THEN 750 'none
710 X1=POS(G$," & ",X1)+1
715 GOTO 450 'to LHS matching
724
725 'ELSE condition
730 X1=POS(G$,"% ",X1)+2
735 GOTO 775 'RHS conditions
749
750 'LHS condition satisfied - do RHS action(s)
755 X1=POS(G$," $ ",X1)+3 'set to start of RHS action
760 IF X1>0 THEN 775
765 X2=CUL\ GOTO 1900 'error in grammar
774
775 'choose action
780 IF OCC("DTRSU",SUB$(G$,X1,1))>0 THEN 800
785 IF OCC("pEPWGC",SUB$(G$,X1,1))>0 THEN 810
795 X2=CUL\ GOTO 1900 'error in grammar
799
800 ON POS("DTRSU",SUB$(G$,X1,1),1) GOSUB 5200,5300,5600,5900,6100
805 GOTO 850
810 ON POS("pEPWGC",SUB$(G$,X1,1),1)
        GOSUB 6100,6400,6500,6600,6000,6050
849
850 'end of action - are there more
855 IF OCC(SEG$(G$,X1,POS(G$,")",X1))," & ")=0 THEN 900 'done
860 IF SUB$(G$,X1,3)=" & " THEN 875
865 X1=X1+1
870 GOTO 860
875 X1=X1+3
880 GOTO 775
899
900 'done - so get next state
905 X1=POS(G$," S",X1+1)
910 IF X1=0 THEN 930
915 IF OCC("0123456789",SUB$(G$,X1+2,1))=1 THEN 935
930 X2=CUL\ GOTO 1900 'error in grammar
935 'state found
940 X$=SEG$(G$,X1+1,X1+2)
945 X2=X1+3
950 ' IF X2>LEN(G$) THEN 350 'get next state
955 IF OCC("0123456789",SUB$(G$,X2,1))=0 THEN 350 'get next state
960 X$=X$&SUB$(G$,X2,1)
965 X2=X2+1
970 GOTO 950
999
1899
1900 'error in grammar
1905 X1=FNZ(ENC$(X2,4)&ENC$(582,2)&SUB$(G$,X1,36))
1999
2100 'LHS C ON DITI ON S * * * DICT (format = DICT=0 or DICT<>0)
2125 IF LEN(D$(0))>0 THEN 2140 'is dictionary index empty
2130 X2=0
2135 GOTO 2150
2140 X2=1
2150 'now evaluate choice
```

Generation 1 - MT41C1

```
2155 IF SUB$(G$,X1+1,1)<>"=" THEN 2185
2165 ON X2+1 GOTO 2180,2170 ' = condition
2170 X2=0
2175 GOTO 2185
2180 X2=1
2185 RETURN
2199
2200 'format is: MORE-TL-TREES
2220 'find if anything is in Y$()
2225 IF LEN(Y$(0))=0 THEN 2292 'find if anything is in Y$()
2230 IF DEC(SUB$(Y$(0),1,2))>=LOF(2) THEN 2296
2240 RESET#2:DEC(SUB$(Y$(0),1,2)) 'routine to find date records & copy
2245 READ#2:X$
2250 IF LEN(X$)<>3 THEN 2292
2255 IF SUB$(X$,1,1)<>"d" THEN 2292
2257 FILE#3:"MT4XD1",2771 'TL structures copy
2260 RESET#3:LOF(3)
2265 WRITE#3:X$
2270 FOR X2=1 TO 2
2275  READ#2:X$
2280  WRITE#3:X$
2285 NEXT X2
2287 FILE#3:"MT5XD1",2771 'LUs
2290 Y$(0)=RPL$(Y$(0),ENC$(LOC(2),2),1)\ GOTO 2230
2292 X2=1
2294 GOTO 2298
2296 X2=0
2298 RETURN
2299
2600 'SEMANTIC-TREE - format is: SEM-TREE=NULL or SEM-TREE<>NULL
2605 'format is: SEM-TREE=NULL or SEM-TREE<>NULL
2610 IF LEN(Y2$(0))=0 THEN 2645
2615 X2=0
2620 X2=POS(Y$(P1),"NP  ",X2+1)
2625 IF X2=0 THEN 2645 'fails
2630 IF UPK(SUB$(Y$(P1),X2+4,1))=0 THEN 2620
2635 X2=1 'it is here
2640 GOTO 2650
2645 X2=0 'it isn't here
2650 'which reply to give
2655 IF SUB$(G$,X1+1,1)<>"=" THEN 2680
2660 IF X2=1 THEN 2675
2665 X2=1
2670 GOTO 2680
2675 X2=0
2680 RETURN
2699
2700 'format is: ARG-PREP=0 or ARG-PREP<>0
2710 X2=POS(Y$(P1),"NP  ",P)+4 'find if prep is there
2715 X$=FNK$("","",UPK(SUB$(Y$(P1),X2,1)),DEC(SUB$(Y$(P1),X2+1,2)),0)
2716  'gets case relation, returning P or A & name
2720 IF LEN(X$)=0 THEN 2970 'not present
2725 'find word in Y1$()
2730 X1$="1"&SUB$(Y$(P1),POS(Y$(P1),"NP  ",P)+4,4)
2735 GOSUB 9000 'find word in Y1$()
```

Generation 1 - MT41C1

```
2740 IF X2=0 THEN 2970
2742 GOSUB 9800 'get whole LU record
2745 X1$=FNF$("",P1,POS(Y$(P1),"NP  ",P))
2747 X1$=SUB$(X1$,LEN(X1$)-1,2)
2750 'present - find cat packet
2760 GOSUB 3100\ GOSUB 3125
2765 IF X5=0 THEN 2970
2770 IF SUB$(X2$,X5+1,1)="2" THEN 2970 'can't have preps
2775 X5=POS(X2$,"$2",X5)+2 'set to prep field
2780 X5=POS(SEG$(X2$,1,POS(X2$,"$",X5)),"["&SUB$(X$,2,1),1)
2785 IF X5=0 THEN 2970
2790 X$=SEG$(X2$,X5+2,POS(X2$,"$",X5)-1)
2795 X1$="["
2800 GOSUB 3175 'clean string
2805 X1$="+"
2810 GOSUB 3175 'clean string
2815 GOTO 2950 'success
2849
2850 'PRED-PREP
2855 'format is PRED-PREP=0 or PRED-PREP<>0
2860 'find if prep is there
2862 X2=POS(Y$(P1),"NP  ",P)+4
2865 X$=FNK$("","",UPK(SUB$(Y$(P1),X2,1)),DEC(SUB$(Y$(P1),X2+1,2)),0)
2866  'gets case relation, returning P or A & name
2870 IF LEN(X$)=0 THEN 2970 'not present
2875 'find word in Y1$()
2885 X1$="1"&SUB$(X$,3,3)
2890 GOSUB 9000 'find word in Y1$()
2893 IF X2=0 THEN 2970
2894 GOSUB 9800
2895 'present - find cat present
2897 X3=1
2898 X5=POS(Y$(X3),"{"&SEG$(Y1$(X2),5,POS(Y1$(X2),"#",5)-1)&"}",1)
2899 IF X5>0 THEN 2907
2901 X3=X3+1
2903 IF X3<=DEC(SUB$(Y$(0),9,2)) THEN 2898
2905 GOTO 2970 'fails
2907 X1$=SUB$(Y$(X3),X5-8,2)
2910 GOSUB 3100
2911 X$=RPL$(X$,"P",1)
2912 GOSUB 3125
2915 IF X5=0 THEN 2970 'not present
2920 X5=POS(X2$,"["&SUB$(X$,2,1),X5)+11
2925 IF X5=11 THEN 2970 'not present
2930 IF SUB$(X2$,X5,1)="/" THEN 2970 'not present
2935 X$=SEG$(X2$,X5,POS(X2$,"/",X5)-1)
2940 X1$="+"
2945 GOSUB 3175 'clean string
2949
2950 'endings
2952 IF POS(X$," ",1)=0 THEN 2955
2953 X$=RPL$(X$,"%",POS(X$," ",1))
2954 GOTO 2952
2955 X$=SEG$(G$,X1,POS(G$," ",X1))&X$
2960 X2=1
```

Generation 1 - MT41C1

```
2965 GOTO 2980
2970 X$=""
2975 X2=0
2980 'evaluate <> or =
2985 IF OCC(SEG$(G$,X1,POS(G$," ",X1)),"=")=0 THEN 3010
2990 IF X2=0 THEN 3005
2995 X2=0
3000 GOTO 3010
3005 X2=1
3010 RETURN
3099
3100 'SUBROUTINE - find cat
3105 X3=POS(X2$,"#$",5)+2
3110 IF SUB$(X2$,X3,2)=X1$ RETURN
3115 X3=X3+6
3120 GOTO 3110
3124
3125 'SUBROUTINE - find analysis info
3130 X5=DEC(SUB$(X2$,X3+2,2)) 'first cat
3135 X4=UPK(SUB$(X2$,X5,1)) 'no of meanings
3140 X5=X5+1 'pointer to first cat
3145 IF VAL(SUB$(X2$,X5+1,1))=POS("AP",SUB$(X$,1,1),1) RETURN 'found
3150 IF UPK(SUB$(X2$,X5,1))=X4 THEN 3165
3155 X5=POS(X2$,"$*",X5)+2
3160 GOTO 3145
3165 X5=0 'end
3170 RETURN 'not found
3174
3175 'SUBROUTINE clean prep
3180 IF POS(X$,X1$,1)=0 RETURN
3185 X$=SUB$(X$,1,POS(X$,X1$,1)-1)
3190 RETURN
3199
3200 'TREE PREP
3205 'format = TREE-PREP=0 or TREE-PREP<>0
3210 'find if prep is there
3215 X3=POS(Y$(P1),"{",P+8)
3220 X2=POS(SEG$(Y$(P1),1,POS(Y$(P1),"}",X3)),"(",1)
3225 IF X2=0 THEN 2970
3230 X$=SEG$(Y$(P1),X2+1,POS(Y$(P1),")",X2+1)-1)
3235 X2=1
3240 GOTO 2950 'endings
3299
3300 'TREE
3350 'housekeeping
3355 X1=POS(G$,"=",X1)+1 'start of tree
3360 MAT Y3$=NUL$ 'where structures is held
3365 Y3$(0)=ENC$(P,2)&ENC$(0,2) 'start & end of phrase
3370 X2=P
3374
3375 'loop
3380 IF SUB$(G$,X1,1)="!" THEN 3825 'end reached
3385 IF OCC("{}+",SUB$(G$,X1,1))>0 THEN 3450
3387 X3=0
3388 IF SUB$(G$,X1,1)<>"#" THEN 3390
```

Generation 1 - MT41C1

```
3389 X3=1
3390 IF SUB$(G$,X1+X3,1)<"A" THEN 3475
3395 IF SUB$(G$,X1+X3,1)>"Z" THEN 3475
3399
3400 'a net
3405 GOSUB 3700 'test cat & load
3410 IF LEN(X$)=0 THEN 3800 'fails
3415 GOSUB 3765 'get conditions
3417 IF LEN(X$)=0 THEN 3430
3418 X1$=FNF$("",P1,X2) 'find case cat
3420 IF LEN(X1$)=0 THEN 3800 'fails
3422 'X$=FNC$(X1$&X$,"",0,0) 'test conditions
3425 IF LEN(X$)=0 THEN 3800 'fails
3430 X2=X2+8
3433 IF SUB$(G$,X1,4)<>"+{#}" THEN 3447 'is this a blanket symbol
3435 X3=X2+1
3438 X3=POS(Y$(P1),"}",X3+1)
3440 IF OCC(SEG$(Y$(P1),X2,X3),"{")<>OCC(SEG$(Y$(P1),X2,X3),"}")
          THEN 3438
3443 Y3$(VAL(X$))=Y3$(VAL(X$))&SEG$(Y$(P1),X2,X3)
3445 X2=X3+1
3447 GOTO 3380 'success
3449
3450 'tree symbol
3455 IF SUB$(G$,X1,1)<>SUB$(Y$(P1),X2,1) THEN 3800 'fails
3460 X1=X1+1
3465 X2=X2+1
3470 GOTO 3380 'get next item
3474
3475 'a unit
3480 GOSUB 3700 'test cat & load
3485 IF LEN(X$)=0 THEN 3800 'fails
3490 GOSUB 3765 'get conditions
3492 IF LEN(X$)=0 THEN 3505
3494 X1$=FNF$("",P1,X2) 'find case cat
3496 IF LEN(X1$)=0 THEN 3800 'fails
3498 'X$=FNC$(X1$&X$,"",0,0) 'test conditions
3500 IF LEN(X$)=0 THEN 3800 'fails
3505 X2=X2+9 'now test word
3510 X1=POS(G$,"{",X1) 'increment rule pointer
3524
3525 'test unit
3530 IF OCC(SEG$(G$,X1,POS(G$,"}",X1)),"#")>0 THEN 3575
3535 X3=POS(G$,"}",X1)-X1+1
3540 IF SEG$(G$,X1,X3)<>SEG$(Y$(P1),X2,X3) THEN 3800 'fails
3545 X1=X1+X3-1
3550 X2=X2+X3-1
3555 GOTO 3380 'get next item
3574
3575 'optional characters
3580 IF SUB$(G$,X1,3)<>"{#}" THEN 3610
3585 'no conditions
3590 X1=X1+3
3595 X2=POS(Y$(P1),"}",X2)+1
3600 GOTO 3380 'get next item
```

Generation 1 - MT41C1

```
3609
3610 'partly conditional
3615 X1=X1+1
3620 IF SUB$(G$,X1,1)<>"#" THEN 3650
3625 IF SUB$(G$,POS(G$,"}",X1)-1,1)="#" THEN 3675
3630 X$=SEG$(G$,X1+1,POS(G$,"}",X1)-1)
3635 X1$=SEG$(Y$(P1),POS(Y$(P1),"}",X2)-LEN(X$)+1,LEN(X$))
3640 GOTO 3665 'to test
3649
3650 'end conditional
3655 X$=SEG$(G$,X1,POS(G$,"#",X1)-1)
3660 X1$=SUB$(Y$(P1),X2,LEN(X$))
3665 IF X$<>X1$ THEN 3800 'fails
3670 GOTO 3690
3674
3675 'middle conditional
3680 X$=SEG$(G$,X1+1,POS(G$,"#",X1+1)-1)
3685 IF OCC(SEG$(Y$(P1),X2,POS(Y$(P1),"}",X2)),X$)=0 THEN 3800 'fails
3690 X1=POS(G$,"}",X1)+1
3695 X2=POS(Y$(P1),"}",X2)+1
3697 GOTO 3380 'next test
3699
3700 'SUBROUTINE test cat & load
3703 IF SUB$(G$,X1,1)="#" THEN 3710
3705 IF SUB$(G$,X1,4)<>SUB$(Y$(P1),X2,4) THEN 3762 'fails
3710 X$="" 'find load no
3715 X3=X1+4
3720 IF OCC("0123456789",SUB$(G$,X3,1))=0 THEN 3740
3725 X$=X$&SUB$(G$,X3,1)
3730 X3=X3+1
3735 GOTO 3720
3740 IF LEN(X$)>0 THEN 3750
3745 X2=CUL\ GOTO 1900 'error in grammar
3750 Y3$(VAL(X$))=SEG$(Y$(P1),X2,POS(Y$(P1),"+",X2+8)-1)
3752 Y3$(0)=RPL$(Y3$(0),ENC$(VAL(X$),2),3)
3755 X1=X3
3760 GOTO 3763
3762 X$=""
3763 RETURN
3764
3765 'SUBROUTINE are there any conditions
3767 IF SUB$(G$,X1,1)<>"[" THEN 3780
3770 X$=SEG$(G$,X1+1,POS(G$,"]",X1+1)-1)
3775 GOTO 3785
3780 X$=""
3785 RETURN
3799
3800 'endings
3805 X2=0
3810 MAT Y3$=NUL$
3815 Y3$(0)=""
3820 GOTO 3835
3825 Y3$(0)=Y3$(0)&ENC$(X2-1,2)
3830 X2=1
3835 RETURN
```

Generation 1 - MT41C1

```
3999
4000 'UNIT
4001 'format is: UNIT=*END or UNIT<>*END
4005 IF POS(Y$(P1),"+",P+8)=0 THEN 4020
4010 X2=1 'more left
4015 GOTO 4025
4020 X2=0 'no more left
4025 IF SUB$(G$,X1+1,1)="=" THEN 2165
4030 RETURN 'ok
4050 'MORE-PHRASES
4051 'format is: MORE-PHRASES
4055 'find if end of Y$() has been reached
4060 IF DEC(SUB$(Y$(0),9,2))<>P1 THEN 4075 'yes, there are more
4065 X2=0
4070 GOTO 4080
4075 X2=1
4080 RETURN
4099
5000 'RHS ACTI ON S
5100 'LOAD
5105 'formats
5106 'LOAD DICT=filename,volume (5200-5299)
5107 'LOAD NEXT -TL-TREE (5300-5599)
5108 'LOAD RECORDS (5600-5899)
5109 'LOAD SEMANTIC-TREE (5900-5999)
5199
5200 'LOAD DICT=filename,volume
5210 MAT D$=NUL$
5215 X2=POS(G$,",",X1)
5225 FILE#1:SEG$(G$,X1+2,X2-1),VAL(SEG$(G$,X2+1,POS(G$," ",X2)-1))
5230 READ#1:D$(0)
5235 READ#1:D$(1)
5240 READ#1:X$
5245 D$(1)=D$(1)&X$
5250 READ#1:D$(2) 'characters
5255 READ#1:X$
5260 D$(3)=D$(3)&X$
5265 IF MORE#1 THEN 5255
5270 FILE#1:SUB$(D$(0),5,6),2771
5295 RETURN
5299
5300 'LOAD NEXT -TL-TREE
5305 'copies records 0-8 from MT3XD1 => MT4XD1
5306 'reads Downward, upward etc
5307 FILE#3:"MT4XD1",2771
5310 IF LEN(Y$(0))>0 THEN 5360 'not first reading
5315 SCRATCH#3
5320 MARGIN#3:MRG(2)
5325 RESET#2:0
5330 FOR X2=0 TO 8
5335  READ#2:X$
5340  WRITE#3:X$
5345 NEXT X2
5350 Y$(0)=ENC$(LOF(3),2)&ENC$(LOF(3),2)&ENC$(LOF(3),2)
5351 Y$(0)=Y$(0)&ENC$(LOF(3)-1,2)&ENC$(0,2)
```

Generation 1 - MT41C1

```
5352 'end of section, phrase, reading, theme, length of matrix
5355 FILE#3:"MT5XD1",2771
5357 SCRATCH#3
5358 FILE#3:"MT4XD1",2771
5359
5360 'now read off tree
5362 MAT Y2$=NUL$ 'clear semantic tree
5363 Y2$(0)=""
5365 MAT Y$=NUL$ 'this doesn't clear Y$(0)
5370 RESET#2:DEC(SUB$(Y$(0),1,2))
5385 READ#2:X$
5390 IF LEN(X$)<>2 THEN 5425 'not a theme record
5395 RESET#3:LOF(3) 'write to results file
5400 WRITE#3:X$
5405 Y$(0)=RPL$(Y$(0),ENC$(LOF(3)-1,2),7)
5410 READ#2:X$
5424
5425 'read records
5430 Y$(1)=X$
5435  X3=2 'pointer to store
5440  X2=0 'pointer to recs processed
5445  READ#2:Y$(X3)
5450  X2=X2+1
5455  IF LEN(Y$(X3))=2 THEN 5490
5460  IF DEC(SUB$(Y$(X3),1,2))=LEN(Y$(X3))-2 THEN 5485
5465  READ#2:X$
5470  X2=X2+1
5475  Y$(X3)=Y$(X3)&X$
5480  GOTO 5460
5485  Y$(X3)=SEG$(Y$(X3),3,LEN(Y$(X3)))
5490  X3=X3+1
5495 IF X2<>DEC(SUB$(Y$(1),2,2)) THEN 5445
5549
5550 'revise records
5555 Y$(0)=RPL$(Y$(0),ENC$(LOC(2),2)&ENC$(2,2),1)
            'pointer to next section
5560 Y$(0)=RPL$(Y$(0),ENC$(X3-1,2),9) 'length of matrix
5565 FILE#3:"MT5XD1",2771
5590 RETURN
5599
5600 'LOAD RECORDS
5605 'go through each phrase & pick out lexical units
5610 MAT Y1$=NUL$
5615 Y1$(0)="0"
5625 'looping routine
5630 X4=3 'first phrase
5635 X5=1 'first item in phrase
5640 IF X5>LEN(Y$(X4)) THEN 5825 'end reached
5645 IF OCC("{}+",SUB$(Y$(X4),X5,1))=0 THEN 5660
5650 X5=X5+1
5655 GOTO 5640
5659
5660 'is this a phrase or unit
5665 IF SUB$(Y$(X4),X5,1)<"A" THEN 5700 'a unit
5670 IF SUB$(Y$(X4),X5,1)>"Z" THEN 5700 'a unit
```

Generation 1 - MT41C1

```
5675 X5=X5+9 'increment pointer
5680 GOTO 5640 'do next item
5699
5700 'unit found - get LUs
5710 IF SUB$(Y$(X4),X5+9,5)="prep(" THEN 5725
5715 X$=SEG$(Y$(X4),X5+9,POS(Y$(X4),"}",X5+9)-1)
5716 X3=9
5717 X1$="5"&X$
5718 GOSUB 9000
5719 IF X2>0 THEN 5795
5720 GOTO 5730
5725 X$=SEG$(Y$(X4),X5+14,POS(Y$(X4),")",X5+14)-1)
5727 X3=14
5730 IF OCC(X$,"#")=0 THEN 5734
5732 X$=RPL$(X$,"%",POS(X$,"#",1))
5733 Y$(X4)=RPL$(Y$(X4),X$,X5+X3)\ GOTO 5730
5734 X$=FNA$(X$,0)
5735 IF LEN(X$)=0 THEN 5765 'error
5740 'check that correct category is present
5745 X3=POS(X1$,"#$",1)+2
5750 IF SUB$(X1$,X3,2)=SUB$(Y$(X4),X5,2) THEN 5775 'ok
5755 X3=X3+6
5760 IF SUB$(X1$,X3,2)<>"$[" THEN 5750
5765 X1=FNZ(ENC$(CUL,4)&ENC$(583,2)&X$)
5774
5775 'found
5780 GOSUB 5850 'write LU records to file
5795 X5=POS(Y$(X4),"}",X5+9)+1
5800 GOTO 5640
5824
5825 'phrase done - get next
5830 X4=X4+1
5835 IF X4>DEC(SUB$(Y$(0),9,2)) RETURN
5840 IF LEN(Y$(X4))=2 THEN 5830
5845 GOTO 5635 'start next phrase
5850 'SUBROUTINE write LU records to file
5855 X3=VAL(Y1$(0))+1
5860 Y1$(X3)=SUB$(Y$(X4),X5+4,4)
5865 IF LOF(3)>0 THEN 5875
5870 MARGIN#3:174
5873 WRITE#3:ENC$(0,2)
5875 Y1$(X3)=Y1$(X3)&SEG$(X1$,1,POS(X1$,"$[",1))&ENC$(LOF(3),2)
5880 X1$=ENC$(LEN(X1$),2)&X1$
5883 RESET#3:LOF(3)
5885 WRITE#3:SEG$(X1$,1,MRG(3))
5887 X1$=SEG$(X1$,MRG(3)+1,LEN(X1$))
5890 IF LEN(X1$)>0 THEN 5885
5894 Y1$(0)=STR$(X3)
5898 RETURN
5899
5900 'LOAD SEM-TREE
5905 IF LEN(Y2$(0))>0 RETURN 'already in
5907 FILE#3:"MT2XD1",2771
5910 'do it quickly
5915 X$="no"
```

Generation 1 - MT41C1

```
5920 GOSUB 5950
5925 IF LEN(Y2$(0))>0 THEN 5948
5927 X$="nn"
5930 GOSUB 5950
5933 IF LEN(Y2$(0))>0 THEN 5948
5935 X$="np"
5937 GOSUB 5950
5938 IF LEN(Y2$(0))>0 THEN 5948
5940 X$="ve"
5945 GOSUB 5950
5947 IF LEN(Y2$(0))>0 THEN 5948
5948 FILE#3:"MT5XD1",2771\RETURN
5949
5950 'SUBROUTINE - read file
5955 X2=0
5957 X2=POS(Y$(P1),X$&"  ",X2+1)
5960 IF X2=0 RETURN
5963 IF UPK(SUB$(Y$(P1),X2+4,1))=0 THEN 5957
5965 X2=UPK(SUB$(Y$(P1),X2+4,1))
5970 RESET#3:X2
5975 READ#3:X$
5977 IF LEN(X$)<10 THEN 5985
5978 X2=X2-1
5980 IF X2>=0 THEN 5970
5982 RETURN
5985 Y2$(0)=X$
5986 X$=X1$=""
5989 FOR X3=1 TO VAL(Y2$(0))
5991  READ#3:Y2$(X3)
5993 NEXT X3
5997 Y2$(0)=ENC$(VAL(Y2$(0)),2)&ENC$(X2,2)
5998 RETURN
5999
6000 'GOTO
6001 'format is: GOTO statename
6005 X1=POS(G$," ",X1)-1
6010 RETURN
6049
6050 'CHAIN
6051 'format is: CHAIN 'filename,volume'
6060 X$=SEG$(G$,X1+3,POS(G$,"'",X1+3)-1)
6065 CHAIN X$
6099
6100 'SET
6101 'format is: SET UNIT=+n or =n or =-n
6110 X2=POS(G$,"=",X1)
6115 X3=POS(G$," ",X1)-1
6120 IF OCC("-+",SUB$(G$,X2+1,1))=0 THEN 6135
6125 X4=VAL(SEG$(G$,X2+2,X3))
6130 GOTO 6175
6135 X4=VAL(SEG$(G$,X2+1,X3))
6149
6150 'this a direct rather than a relative setting of the pointer
6152 IF SUB$(G$,X1,1)="p" THEN 6350
6155 P=X4
```

Generation 1 - MT41C1

```
6160 GOTO 6345 'to end
6174
6175 'relative settings
6177 IF SUB$(G$,X1,1)="p" THEN 6365
6180 IF SUB$(G$,X2+1,1)="-" THEN 6250
6185 X3=0
6195 IF SUB$(Y$(P1),P,1)<"A" THEN 6220 'a unit
6200 IF SUB$(Y$(P1),P,1)>"Z" THEN 6220 'a unit
6205 'a net
6210 P=P+9
6215 GOTO 6230
6220 'a unit
6225 P=POS(Y$(P1),"}",P+9)+1
6230 IF OCC("{}+",SUB$(Y$(P1),P,1))=0 THEN 6234
6232 P=P+1\ GOTO 6230
6234 IF P>LEN(Y$(P1)) THEN 6345
6235 X3=X3+1
6240 IF X3<>X4 THEN 6195
6245 GOTO 6345
6249
6250 'minus value
6255 IF P=0 THEN 6340
6260 IF OCC("{}+",SUB$(Y$(P1),P,1))=0 THEN 6275
6265 P=P+1
6270 GOTO 6255
6275 'find previous "+"
6280 X3=P
6285 IF X3=1 THEN 6340
6290 IF SUB$(Y$(P1),X3,1)="+" THEN 6305
6295 X3=X3-1
6300 GOTO 6285
6305 IF SUB$(Y$(P1),X3+1,1)<>"{" THEN 6320
6310 X3=X3+1
6315 GOTO 6305
6320 X4=X4-1
6325 P=X3
6330 IF X4>0 THEN 6255
6335 GOTO 6345
6340 P=1
6345 RETURN
6349
6350 'SET-PHRASE
6352 P1=X4
6354 IF LEN(Y$(P1))>3 THEN 6397
6356 P1=P1+1
6358 GOTO 6354
6360 GOTO 6397
6365 IF SUB$(G$,X2+1,1)="-" THEN 6397
6370 X3=0
6375 IF P1>DEC(SUB$(Y$(0),9,2)) THEN 6397
6380 P1=P1+1
6385 IF LEN(Y$(P1))=2 THEN 6375
6390 X3=X3+1
6395 IF X3<>X4 THEN 6375
6397 RETURN
```

Generation 1 - MT41C1

```
6399
6400 'ERROR
6405 'format is: ERROR='number'
6410 X2=VAL(SEG$(G$,X1+3,POS(G$,"'",X1+3)-1))
6415 X$=ENC$(CUL,4)&ENC$(X2,2)
6420 X$=X$&SEG$(Y$(P1),P,POS(Y$(P1),"}",P))
6425 X2=FNZ(X$) 'report error
6499
6500 'PUT - format is: PUT ITEM  eg PUT ARG-PREP
6504 X2=POS(X$," ",X1+2)-X1+5
6505 IF SUB$(G$,X1+4,X2)=SUB$(X$,1,X2) THEN 6515
6510 X2=CUL\ GOTO 1900 'error
6515 X$=SEG$(X$,POS(X$," ",1)+1,LEN(X$))
6520 X2=POS(Y$(P1),"{",P)
6525 X3=POS(Y$(P1),"}",P)
6530 Y$(P1)=SUB$(Y$(P1),1,X2)&X$&SEG$(Y$(P1),X3,LEN(Y$(P1)))
6535 RETURN
6599
6600 'WRITE TREES
6605 X2=LOF(3)
6610 RESET#3:LOF(3)
6615 FOR X3=0 TO VAL(Y1$(0))
6620  WRITE#3:Y1$(X3)
6625 NEXT X3
6630 RESET#3:0
6635 READ#3:X$
6640 RESET#3:0
6645 WRITE#3:SEG$(X$,1,LEN(X$)-2)&ENC$(X2,2)&ENC$(LOF(3),2)
6649
6650 'write trees
6655 FILE#3:"MT4XD1",2771
6660 RESET#3:LOF(3)
6665 FOR X2=1 TO DEC(SUB$(Y$(0),9,2))
6670  IF LEN(Y$(X2))>3 THEN 6685
6675  WRITE#3:Y$(X2)
6680  GOTO 6705
6685  Y$(X2)=ENC$(LEN(Y$(X2)),2)&Y$(X2)
6690  WRITE#3:SUB$(Y$(X2),1,MRG(3))
6695  Y$(X2)=SEG$(Y$(X2),MRG(3)+1,LEN(Y$(X2)))
6700  IF LEN(Y$(X2))>0 THEN 6690
6705 NEXT X2
6710 FILE#3:"MT5XD1",2771
6715 RETURN
6999
7500 DEF FNA$(X$,X4) 'search
7505  FOR P1=1 TO LEN(X$)
7510   P=POS(D$(2),SUB$(X$,P1,1),1)
7515   X4=X4+(P*(DEC(SUB$(D$(1),(P1*2)-1,2))))
7520  NEXT P1
7525  'key done - calculate hash no.
7530  X1$=ENC$(MOD(X4,DEC(SUB$(D$(0),1,2))),2)
7549
7550  'search on core keys
7555  P=0 'start of dict -1
7560  P=POS(D$(3),X1$,P+1)
```

Generation 1 - MT41C1

```
7565  IF P=0 THEN 7850
7570  IF MOD(P+3,4)<>0 THEN 7560
7674
7675  'key found - is this correct record
7680  RESET#1:DEC(SUB$(D$(3),P+2,2))
7685  READ#1:X1$
7690  'concatenate trailers (if necessary)
7695  IF DEC(SUB$(X1$,LEN(X1$)-1,2))=0 THEN 7800
7700  'binary search on backing store
7705  X4=0 'search area start
7710  P1=LOF(1) 'search area end
7715  RESET#1:INT((X4+P1)/2)
7720  READ#1:X2$
7725  IF SUB$(X2$,1,2)=SUB$(X1$,LEN(X1$)-1,2) THEN 7793
7730  IF SUB$(X2$,1,2)>SUB$(X1$,LEN(X1$)-1,2) THEN 7755 'in lower half
7735  'in upper half
7740  IF X4=(INT((X4+P1)/2))+1 THEN 7775 'failure to find trailer
7745  X4=(INT((X4+P1)/2))+1
7750  GOTO 7715
7755  'in lower half
7760  IF P1=INT((X4+P1)/2) THEN 7775 'failure to find trailer
7765  P1=INT((X4+P1)/2)
7770  GOTO 7715
7775  'failure to find trailers
7780  IF POS(SUB$(X1$,1,LEN(X1$)-4),"#",1)=0 THEN 7790
7785  X4=FNZ(ENC$(CUL,4)&ENC$(584,2)&SUB$(X1$,1,POS(X1$,"#",1)-1))
7790  X4=FNZ(ENC$(CUL,4)&ENC$(584,2)&SUB$(X1$,1,LEN(X1$)-4))
7793  'add trailer record
7795  X1$=SUB$(X1$,1,LEN(X1$)-4)&SEG$(X2$,3,LEN(X2$))
7797  GOTO 7695
7799
7800  'whole record retrieved
7805  IF LEN(X$)>LEN(X1$) THEN 7815
7810  IF X$&"#"=SUB$(X1$,1,LEN(X$)+1) THEN 7825 'found
7815  X1$=SUB$(D$(3),P,2)
7820  GOTO 7560 'continue search
7824
7825  X1$=SUB$(X1$,1,LEN(X1$)-4) 'success
7827  LET FNA$="!" 'success
7830  X$=X2$=""
7835  GOTO 7865
7849
7850  'endings
7855  LET FNA$=""
7860  X$=X1$=X2$=""
7865 FNEND
7999
8000 DEF FNK$(X$,X1$,X4,X1,X2) 'find case relation
8050  'find starting point
8055  X4=X4-DEC(SUB$(Y2$(0),3,2)) 'subtract "golden number"
8060  X$=SUB$("AP",POS("ap",SUB$(Y2$(X4),X1,1),1),1)
8074
8075  'now get relation
8080  X1$="pred|PRED|FRAM|arg |FULL|"
8085  X2=UPK(SUB$(Y2$(X4),X1+4,1))
```

Generation 1 - MT41C1

```
8090  IF X2=0 THEN 8265 'no relation present
8095  X1=DEC(SUB$(Y2$(X4),X1+5,2))
8100  X4=X2
8105  IF POS(X1$,SUB$(Y2$(X4),X1,4),1)=0 THEN 8125 'found
8110  GOTO 8085
8124
8125  'relation found
8130  X1$="PART|FROM| TO  THRU"
8135  IF POS(X1$,SUB$(Y2$(X4),X1,4),1)>0 THEN 8150 'change name
8140  X$=X$&SUB$(Y2$(X4),X1,1)
8145  GOTO 8200 'retrieve pos of PRED
8150  'change names
8155  X1$="THRU| TO  "
8160  IF POS(X1$,SUB$(Y2$(X4),X1,4),1)>0 THEN 8185 'complex change
8165  'simple change
8170  X1$="FfGLP%"
8175  X$=X$&SUB$(X1$,POS(X1$,SUB$(Y2$(X4),X1,1),1)+1,1)
8180  GOTO 8200
8185  X1$="HtOe"
8190  X3=X3+1
8195  GOTO 8175
8199
8200  'find attached PRED
8205  IF X1=1 THEN 8270 'none - hard luck
8210  X1=1
8215  IF UPK(SUB$(Y2$(X4),X1+7,1))=0 THEN 8250
8220  X2=UPK(SUB$(Y2$(X4),X1+7,1))
8225  X1=DEC(SUB$(Y2$(X4),X1+8,2))
8230  X4=X2
8235  GOTO 8215
8249
8250  'ending (success)
8255  LET FNK$=X$&PAK$(X4+DEC(SUB$(Y2$(0),3,2)),1)&ENC$(X1,2)
8260  GOTO 8270
8265  LET FNK$=""
8270  X$=X1$=""
8275 FNEND
8299
9000 'find item in Y1$()
9005 X2=1
9020 IF X2>VAL(Y1$(0)) THEN 9045 'not found
9025 IF VAL(SUB$(X1$,1,1))+LEN(X1$)-1>LEN(Y1$(X2)) THEN 9035
9030 IF SUB$(Y1$(X2),VAL(SUB$(X1$,1,1)),LEN(X1$)-1)
          =SEG$(X1$,2,LEN(X1$))RETURN
9035 X2=X2+1
9040 GOTO 9020
9045 X2=0
9050 RETURN
9100 DEF FNF$(X$,X1,X2)
9105  IF SUB$(Y$(X1),X2,4)<>"VP  " THEN 9150
9110  X1=X1-1
9115  X2=LEN(Y$(X1))-3
9120  IF X2=0 THEN 9180 'fails
9125  IF SUB$(Y$(X1),X2,4)="NP  " THEN 9150
9130  X2=X2-1
```

Generation 1 - MT41C1

```
9135  GOTO 9120
9149
9150  'item found
9155  X$=SUB$(Y$(X1),X2+4,3)
9160  X2=POS(Y$(X1),X$,X2+8)
9165  IF X2=0 THEN 9180 'fails
9170  LET FNF$=X$&SUB$(Y$(X1),X2-4,2)
9175  GOTO 9185
9180  LET FNF$=""
9185  X$=""
9190 FNEND
9199
9800 'SUBROUTINE read LU data
9805  RESET#3:DEC(SUB$(Y1$(X2),LEN(Y1$(X2))-1,2))
9810  READ#3:X2$
9815  IF DEC(SUB$(X2$,1,2))=LEN(X2$)-2 THEN 9835
9820  READ#3:X1$
9825  X2$=X2$&X1$
9830  GOTO 9815
9835  X2$=SEG$(X2$,3,LEN(X2$))
9840 RETURN
9899
9900 DEF FNZ(X$) 'error reporting
9910  NO ERROR
9915  FILE#1:"ERROR",2771
9920  IF LOF(1)>0 THEN 9950
9930  SCRATCH#1
9940  MARGIN#1:174
9950  RESET#1:LOF(1)
9952  FILE#2:"MT1XD1",2771
9954  RESET#2:0
9956  READ#2:X1$
9960  WRITE#1:"MT41C1"&SUB$(X1$,5,2)&SUB$(X$,1,MRG(1)-8)
9970  CHAIN "MT11C1,2771"
9990 FNEND
9999 END
```

* * * END OF PRINT * * *

FLOWCHARTS

	Page
Main routine - MT41C1/1	310
DICT - MT41C1/2	312
MORE-TL-TREES - MT41C1/3	313
TREE - MT41C1/4	314
Test category and load - MT41C1/5	317
Retrieve case category - MT41C1/6	318
UNIT - MT41C1/8	319
MORE-PHRASES - MT41C1/9	320
SEM-TREE - MT41C1/10	321
ARG-PREP; PRED-PREP; TREE-PREP - MT41C1/11	322
Retrieve case relation and type of case item - MT41C1/12	323
LOAD DICT - MT41C1/14	324
LOAD NEXT-TL-TREE - MT41C1/15	325
LOAD RECORDS - MT41C1/16	326
CHAIN - MT41C1/17	328
SET UNIT - MT41C1/18	329
SET PHRASE - MT41C1/19	330
ERROR - MT41C1/20	331
WRITE TREES - MT41C1/21	332
GOTO - MT41C1/22	333
LOAD SEM-TREE - MT41C1/23	334
PUT - MT41C1/24	335

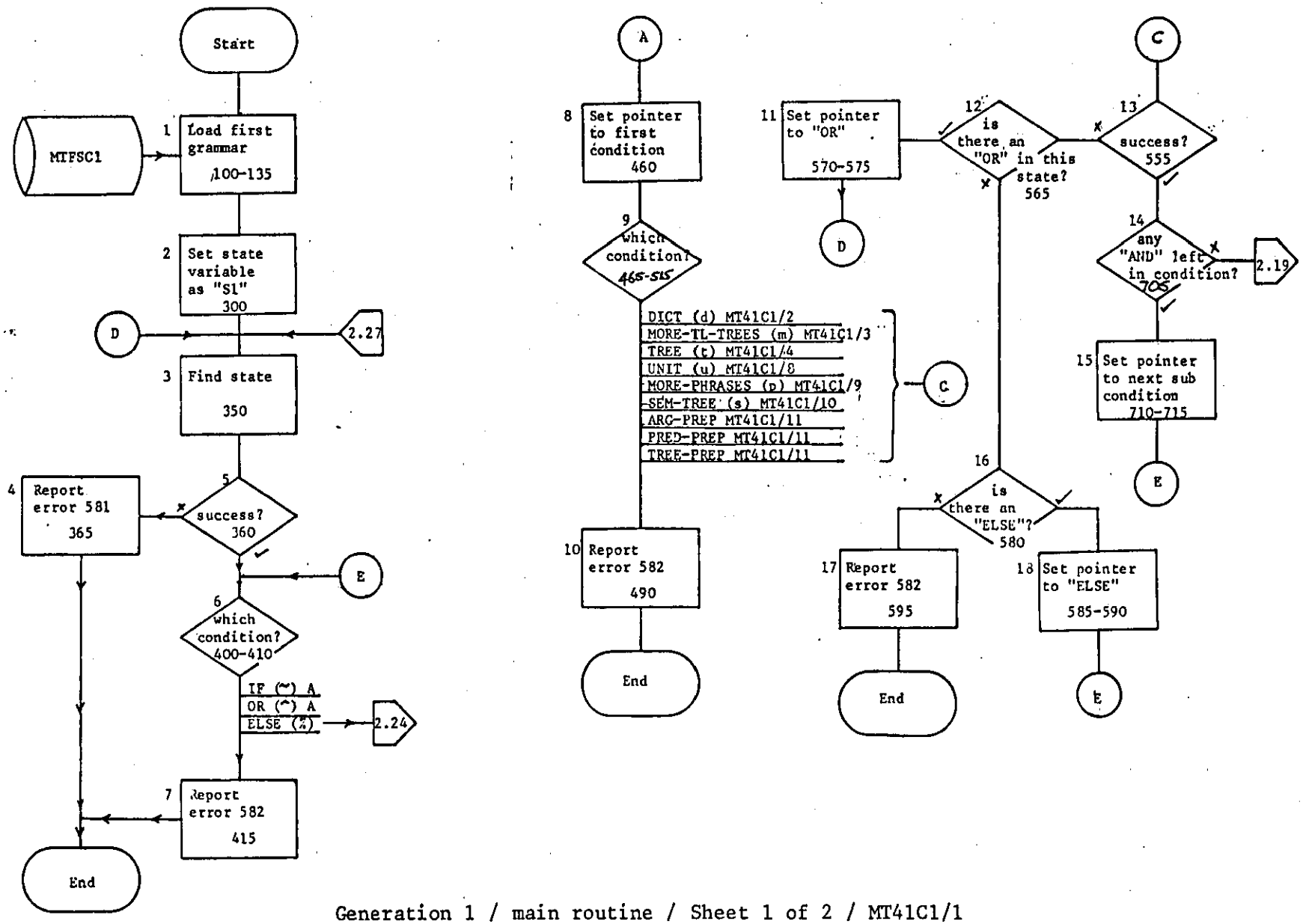

Generation 1 / main routine / Sheet 1 of 2 / MT41C1/1

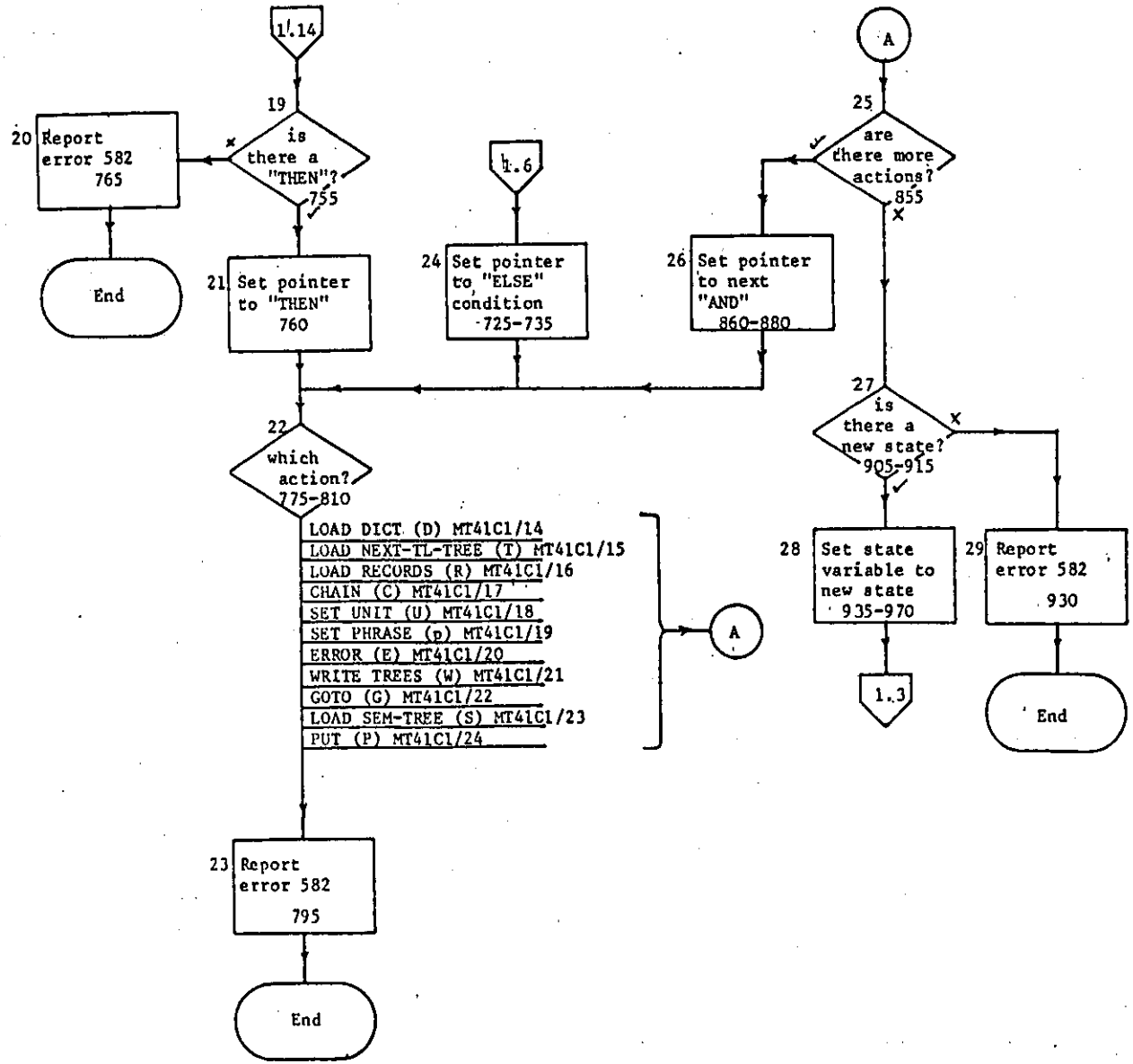

Generation 1 / main routine / Sheet 2 of 2 / MT41C1/1

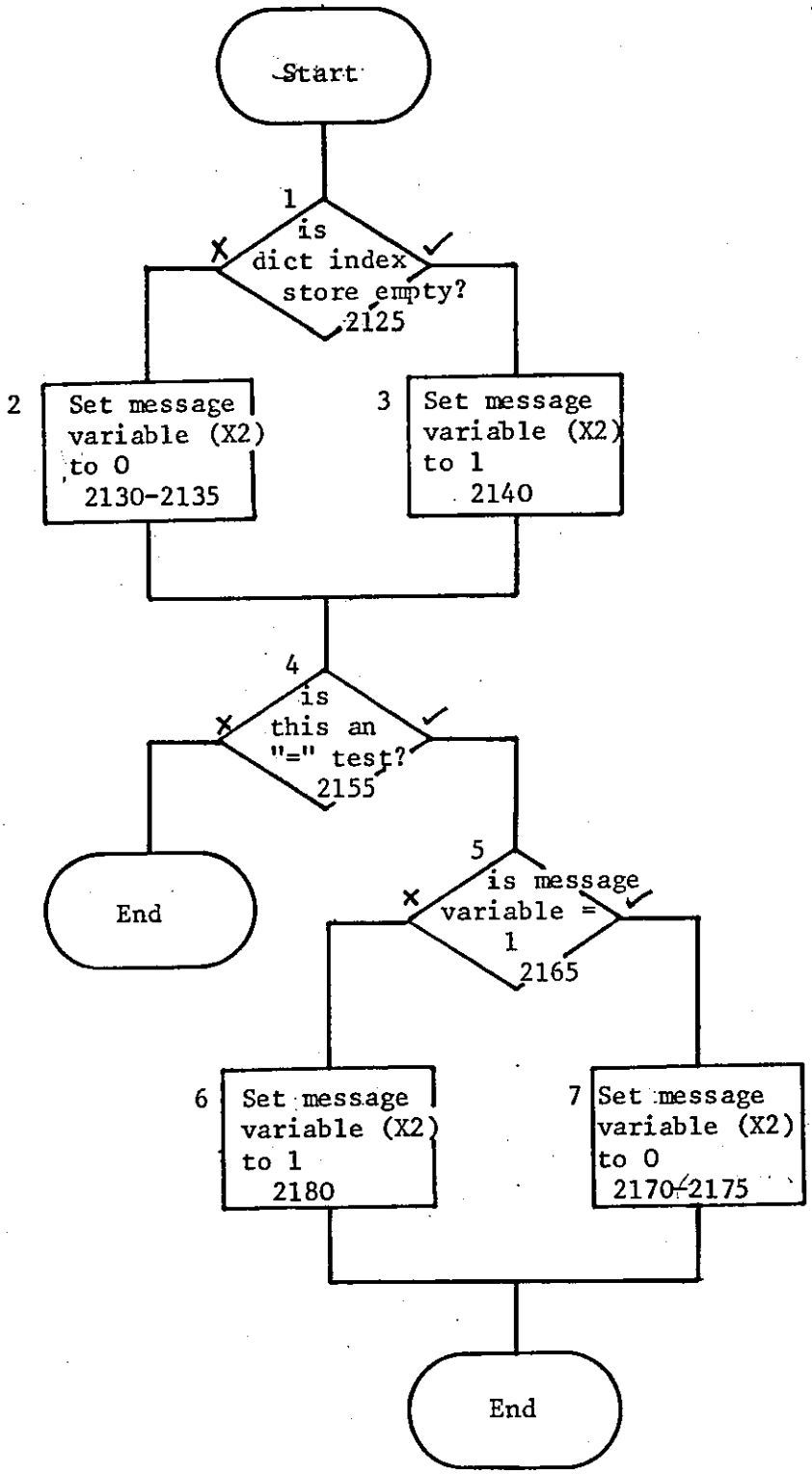

Generation 1 / DICT / Sheet 1 of 1 / MT41C1/2

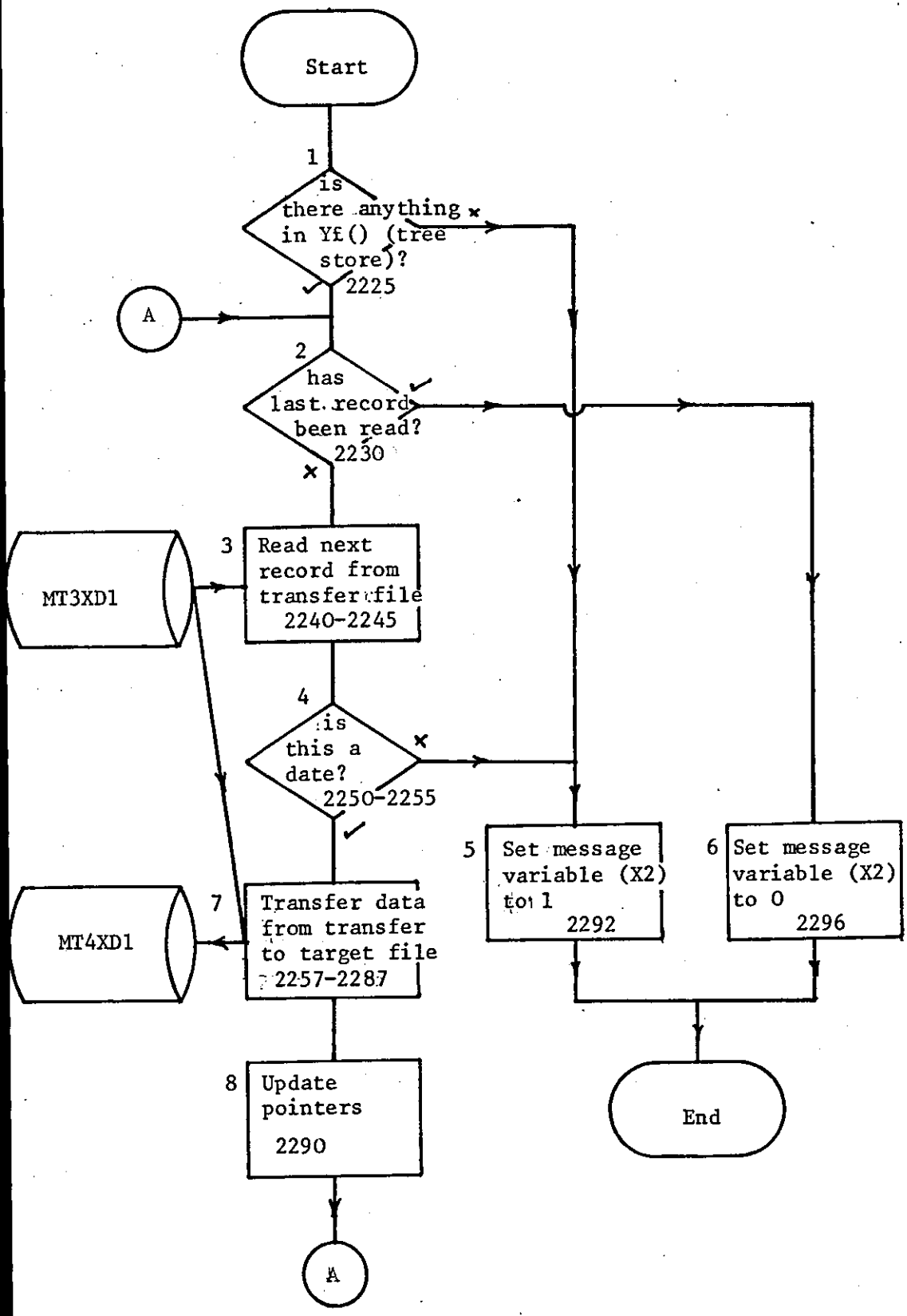

Generation 1 / MORE-TL-TREES / Sheet 1 of 1 / MT41C1/3

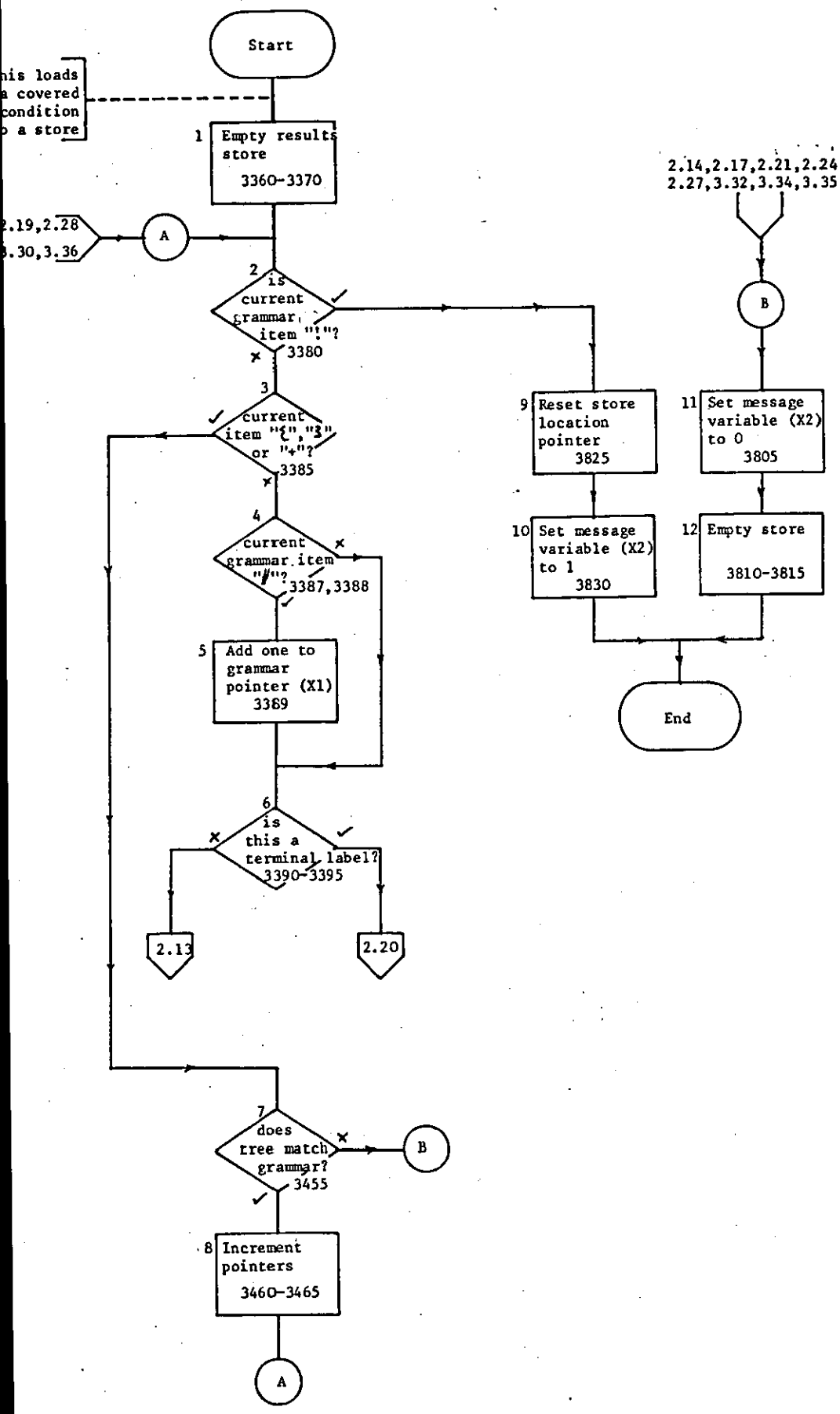

Generation 1 / TREE / Sheet 1 of 3 / MT41C1/4

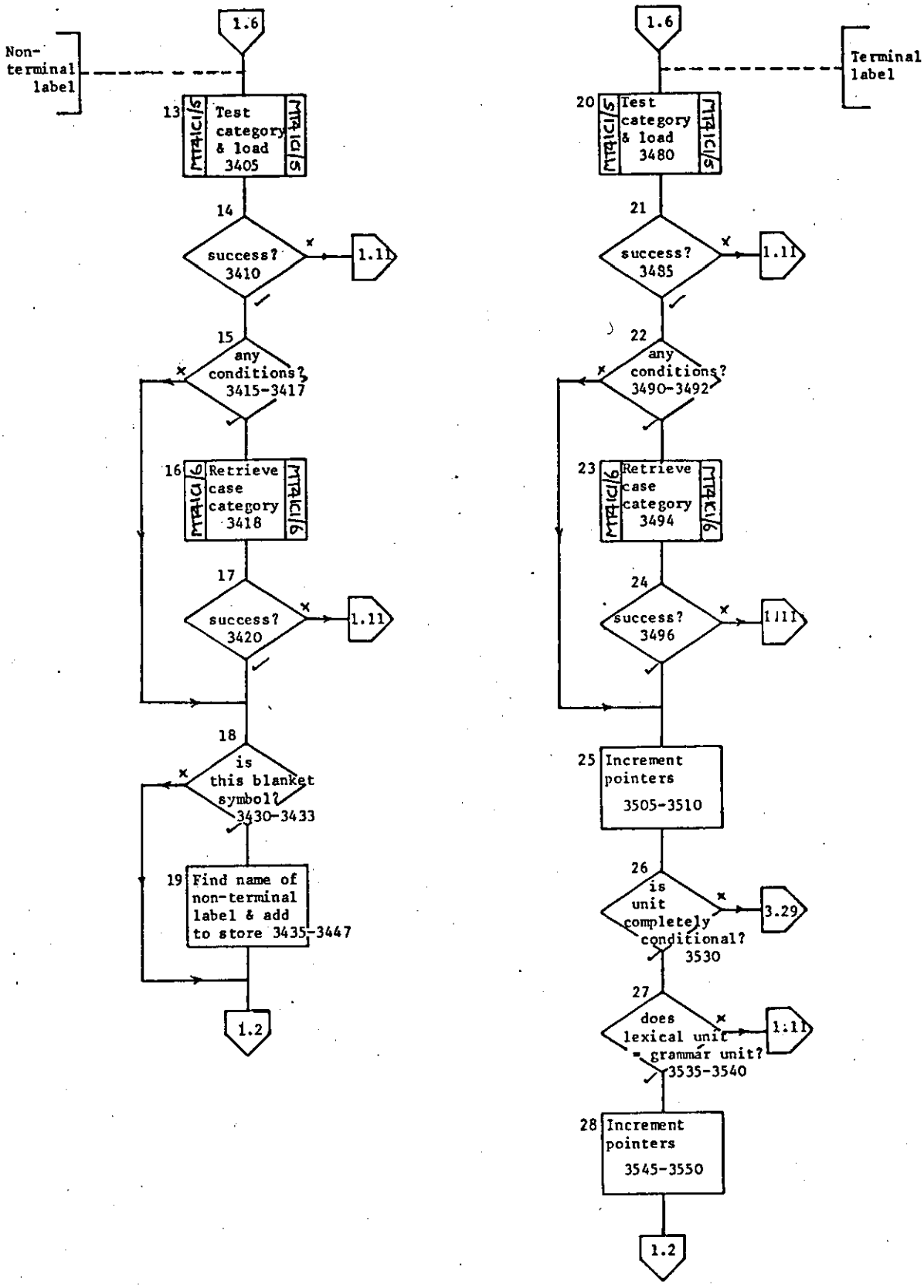

Generation 1 / TREE / Sheet 2 of 3 / MT41C1/4

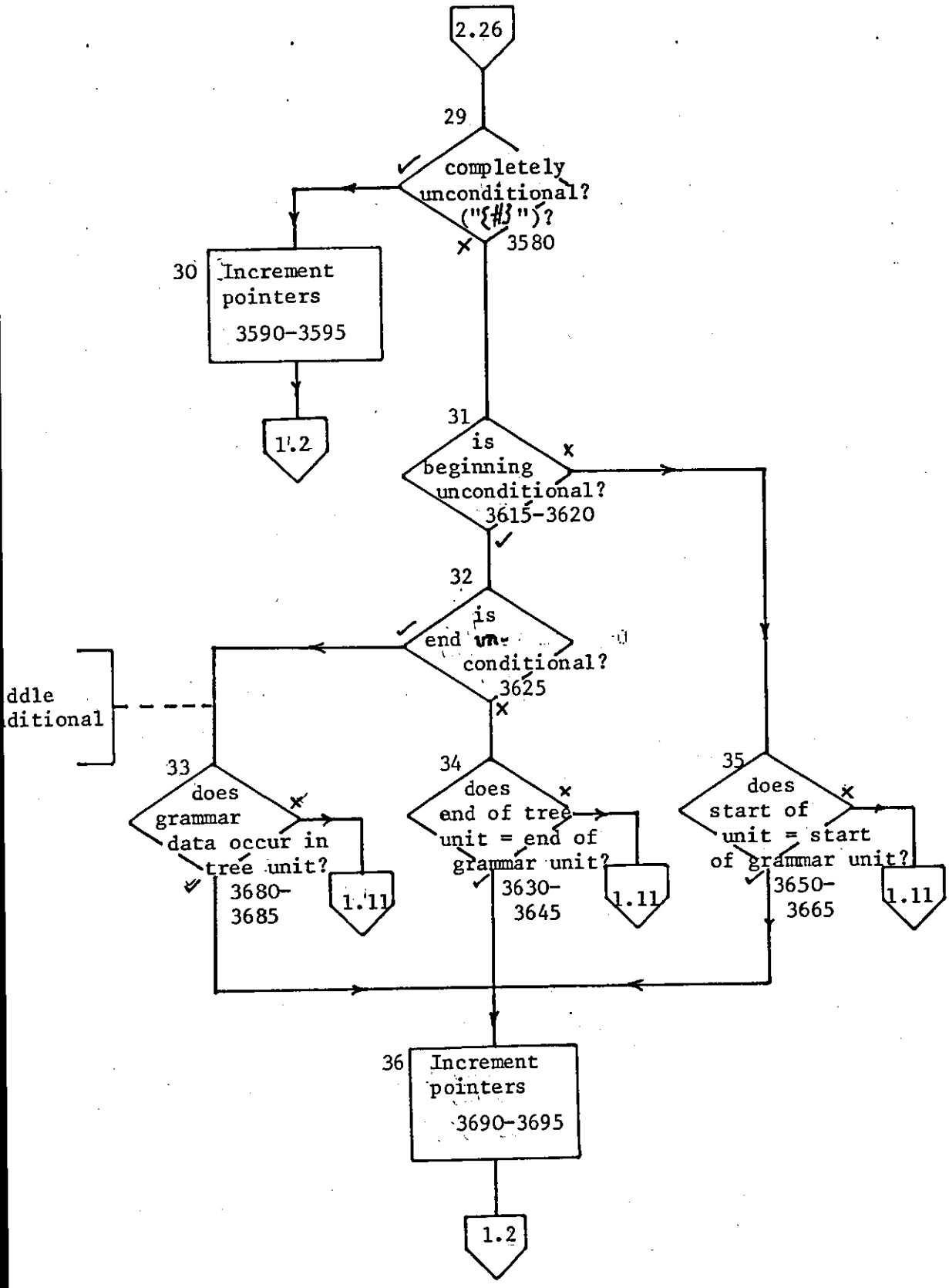

Generation 1 / TREE / Sheet 3 of 3 / MT41C1/4

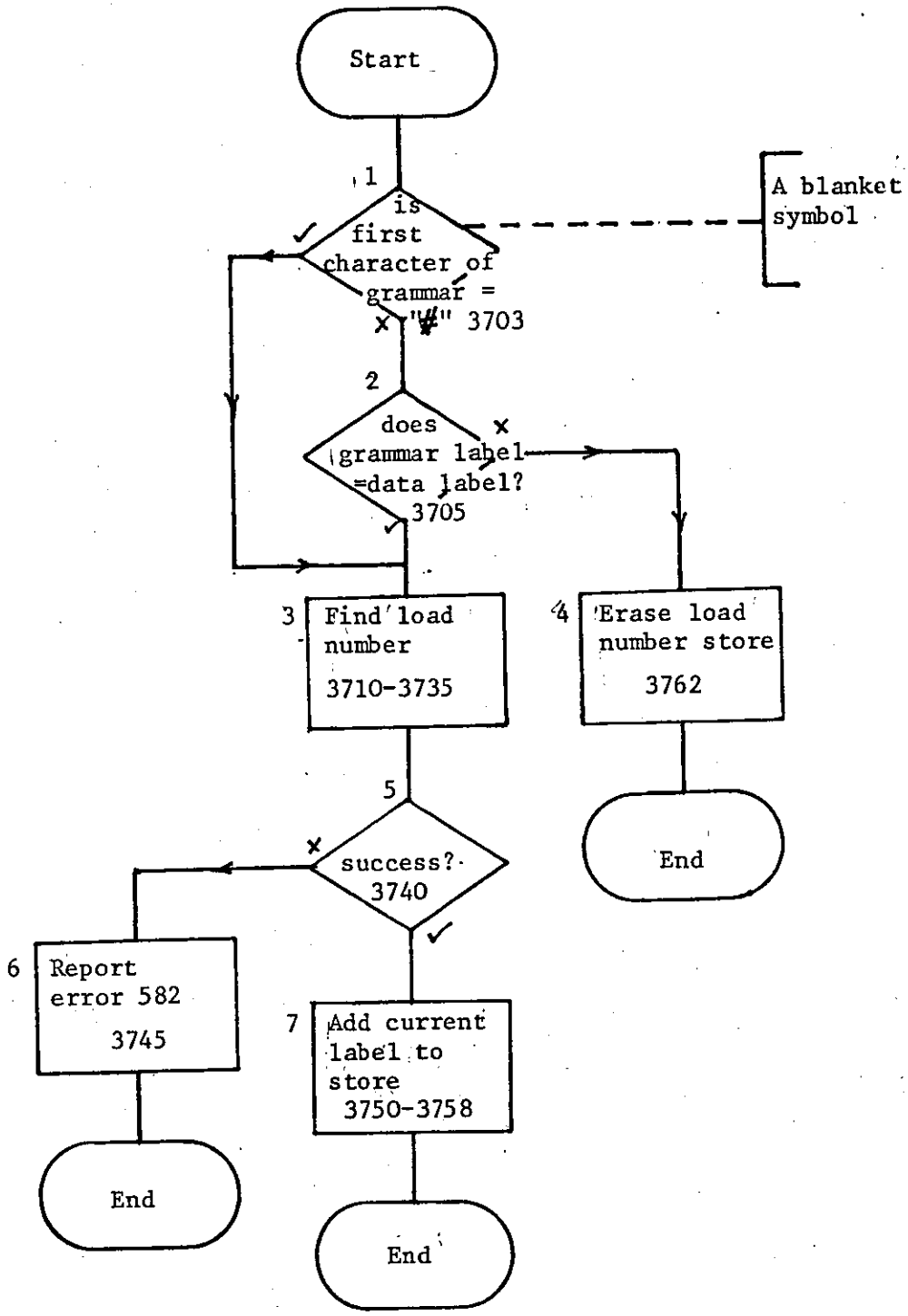

Generation 1 / test category and load / Sheet 1 of 1 / MT41C1/5

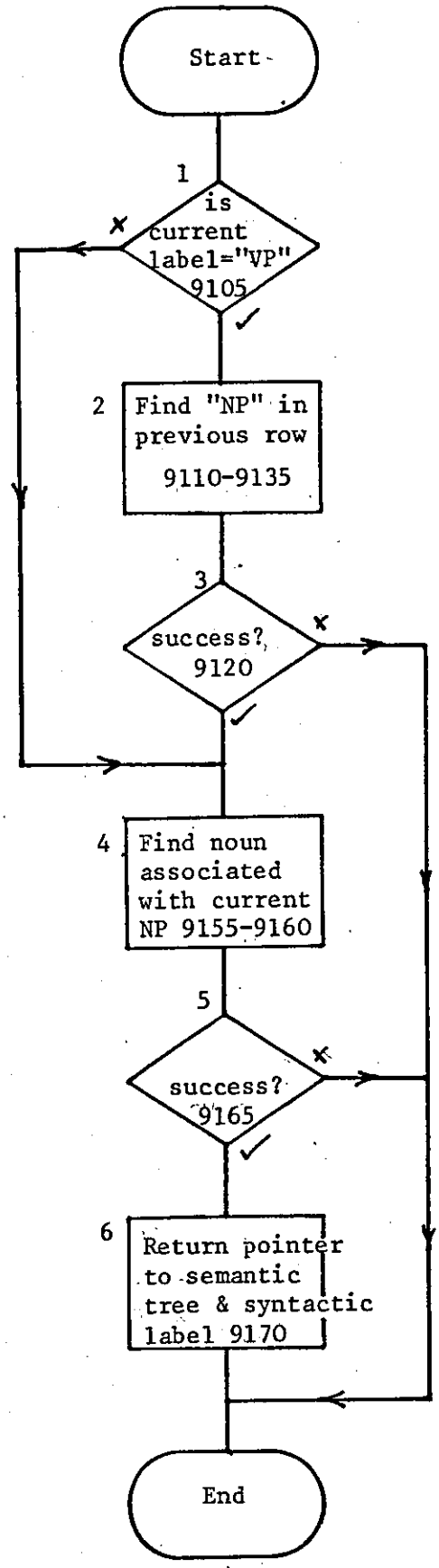

Generation 1 / Retrieve case category / Sheet 1 of 1 / MT41C1/6

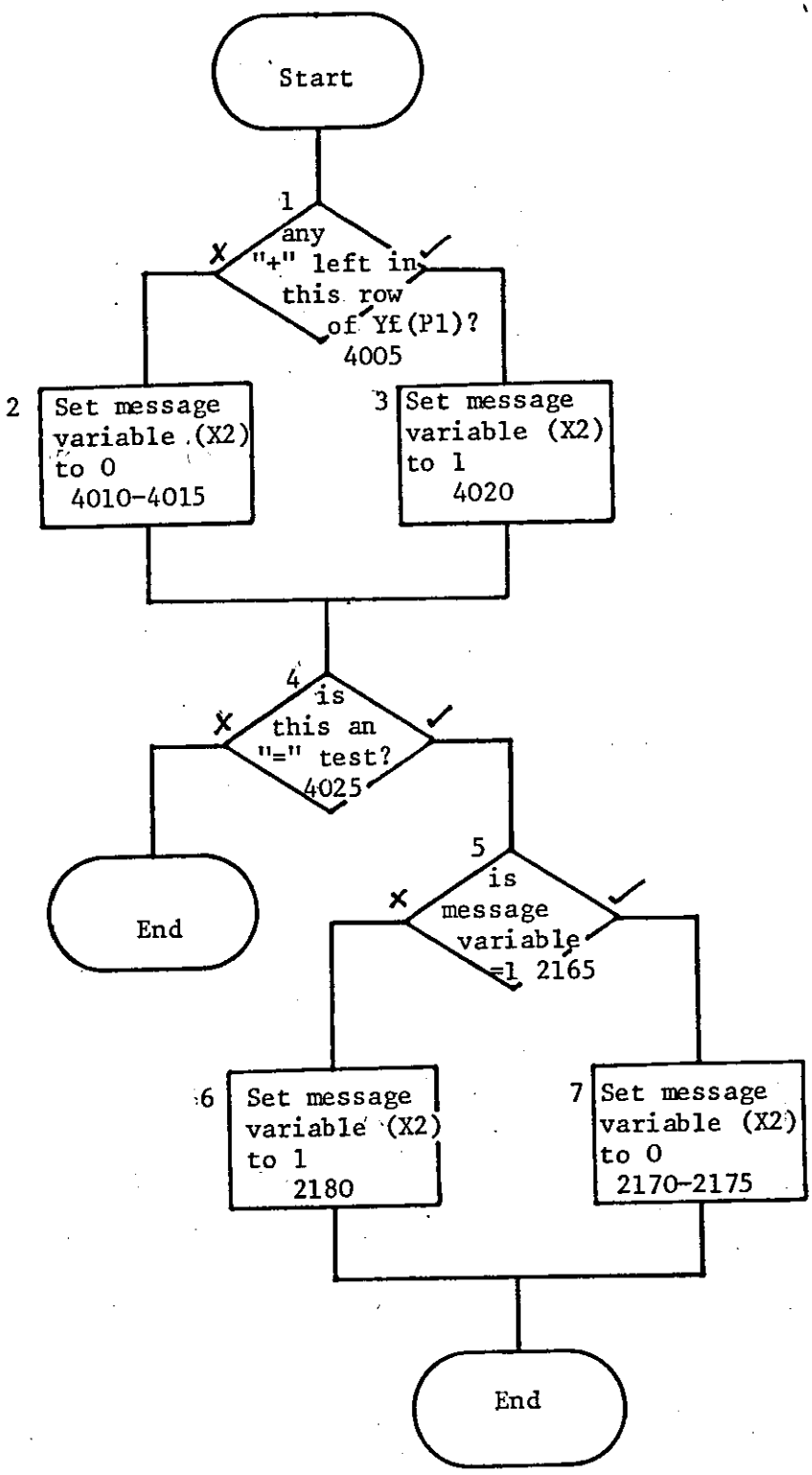

Generation 1 / UNIT / Sheet 1 of 1 / MT41C1/8

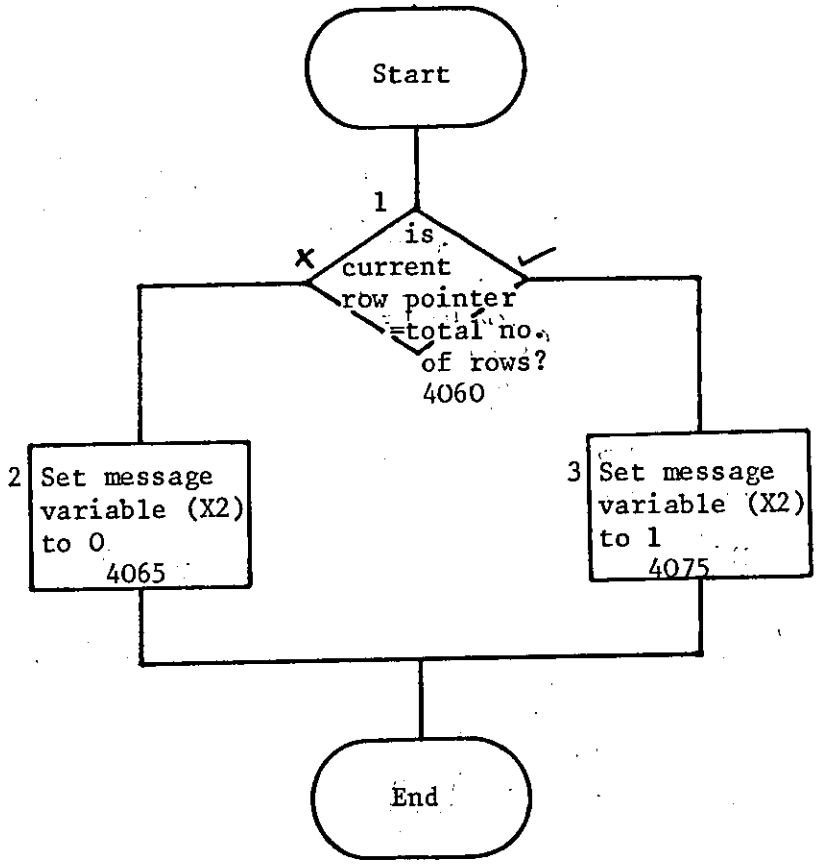

Generation 1 / MORE-PHRASES / Sheet 1 of 1 / MT41C1/9

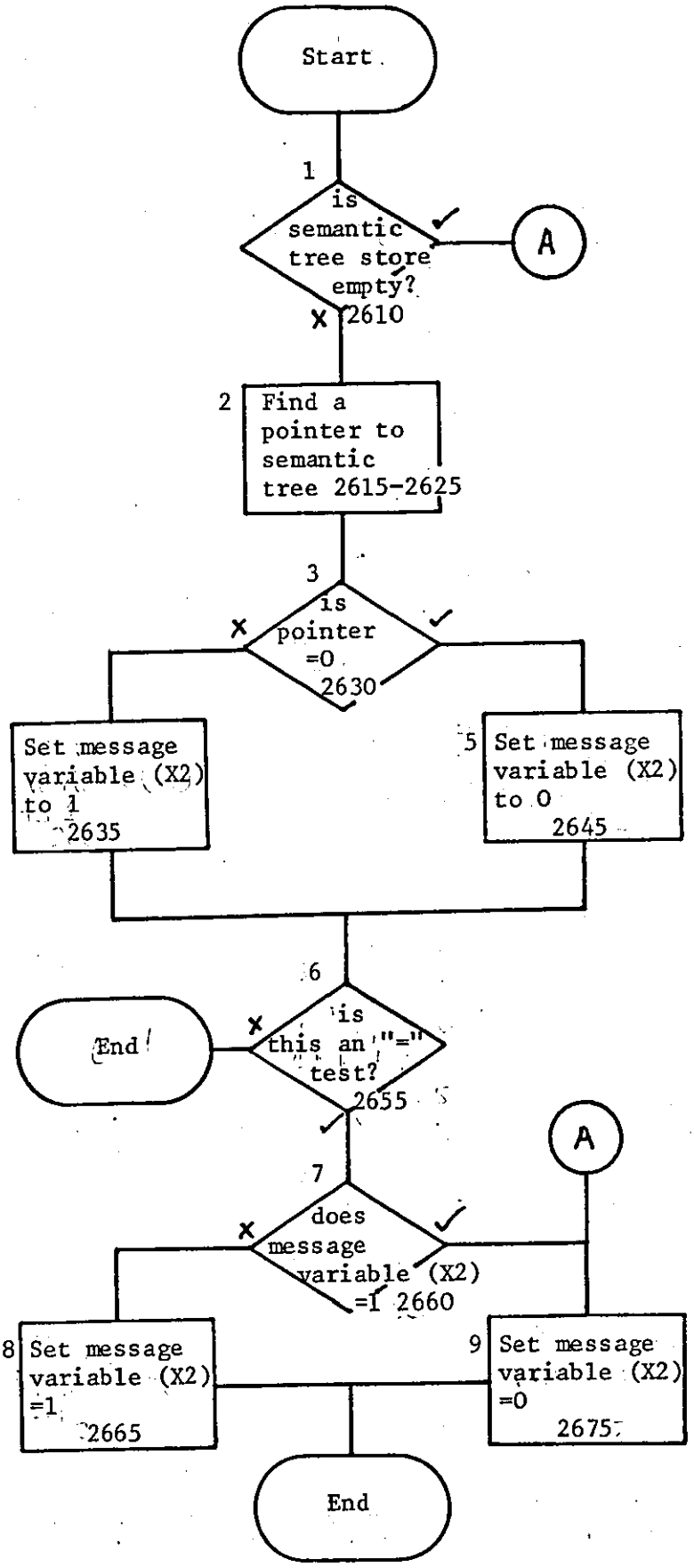

Generation 1 / SEM-TREE / Sheet 1 of 1 / MT41C1/10

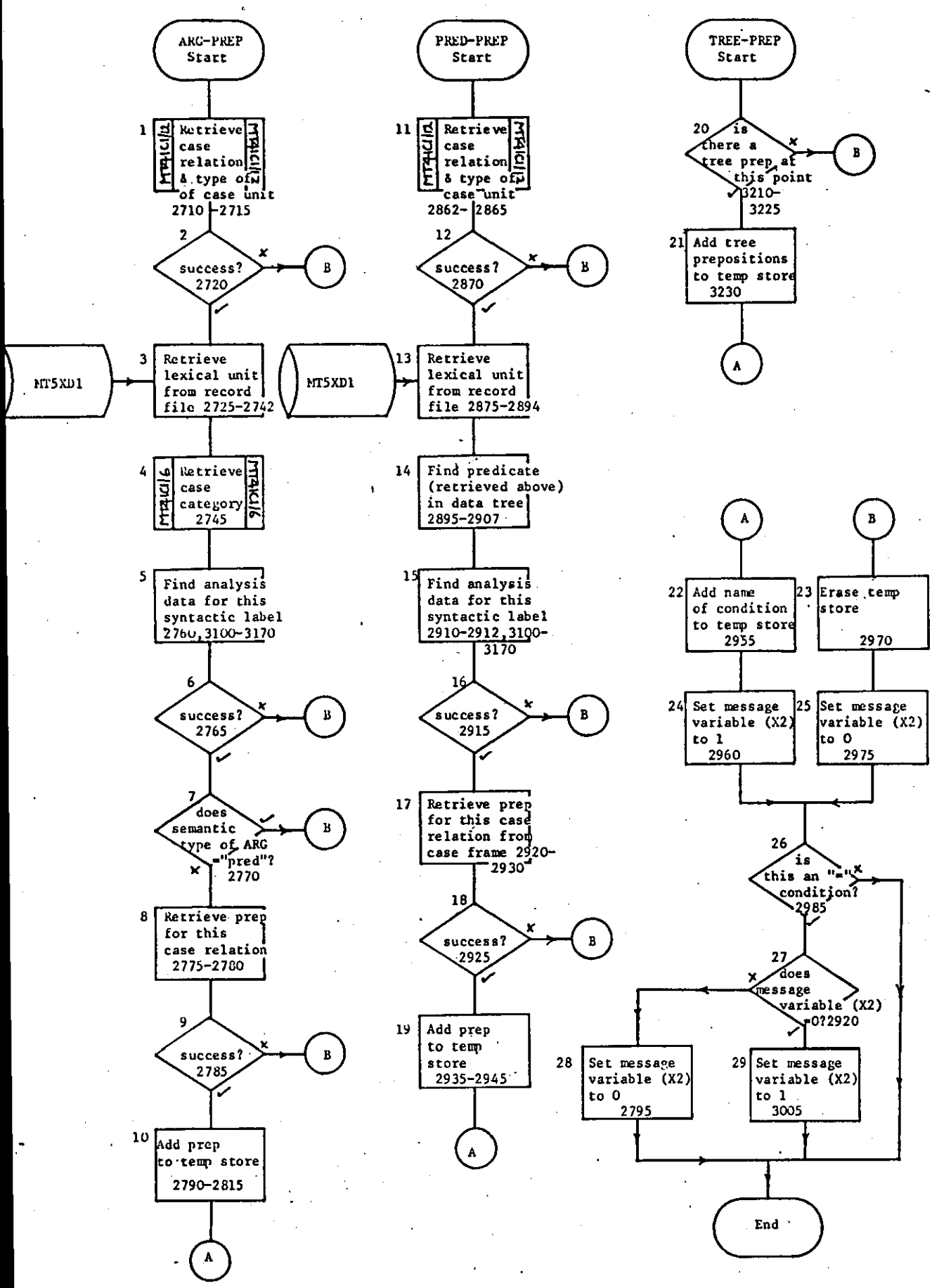

Generation 1 / ARG-PREP; PRED-PREP; TREE-PREP / Sheet 1 of 1 / MT41C1/11

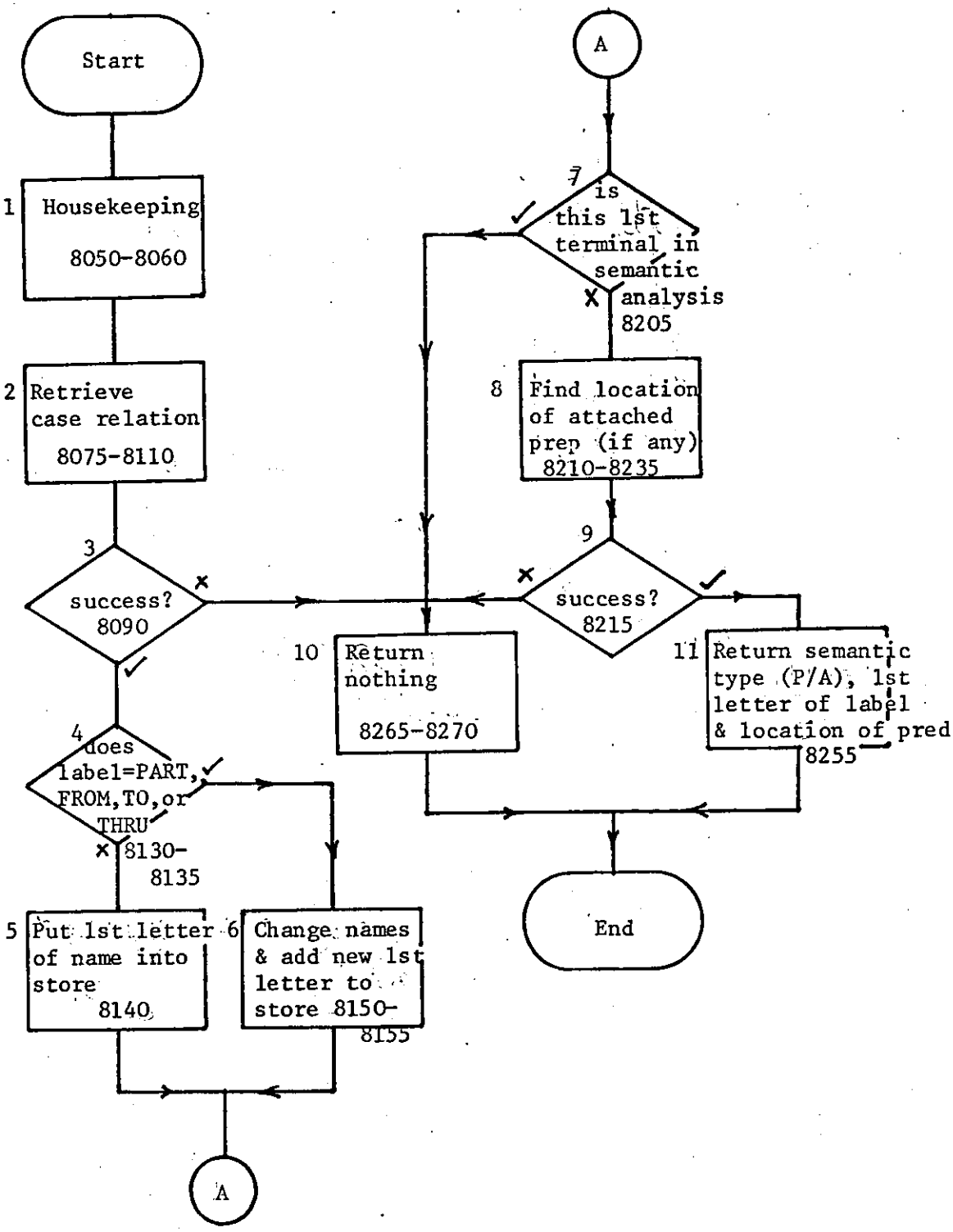

Generation 1 / retrieve case relation & type of case items / Sheet 1 of 1 / MT41C1/12

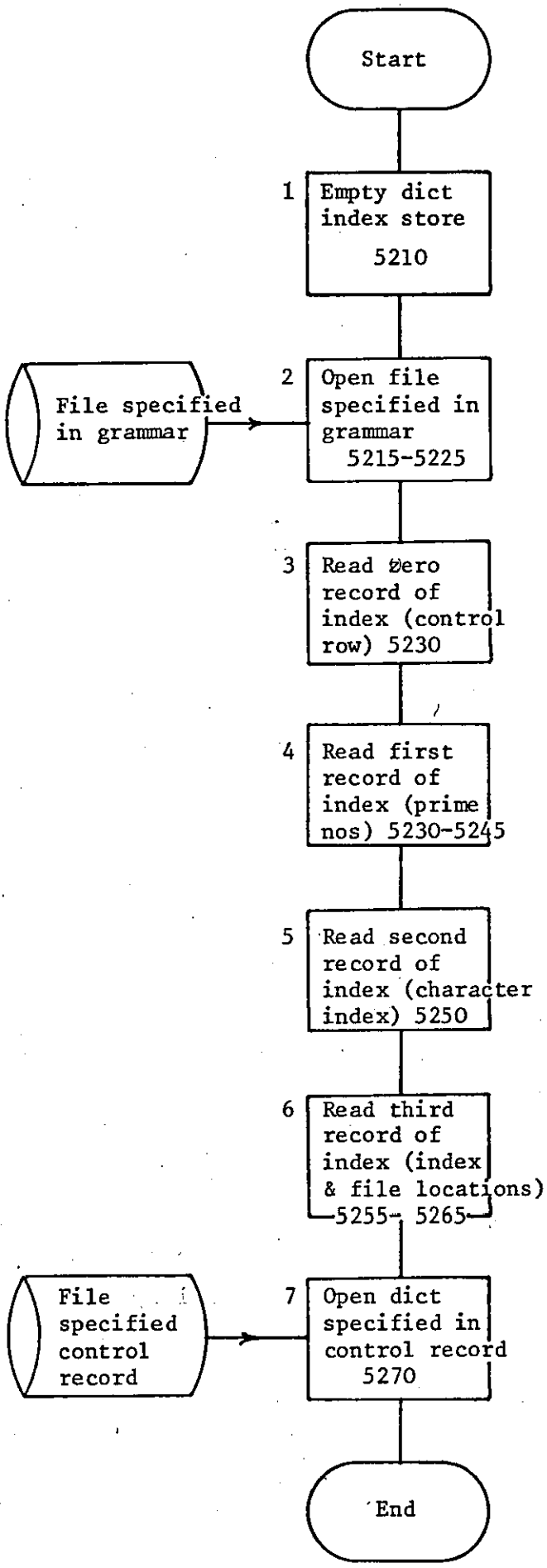

Generation 1 / LOAD DICT / Sheet 1 of 1 / MT41C1/14

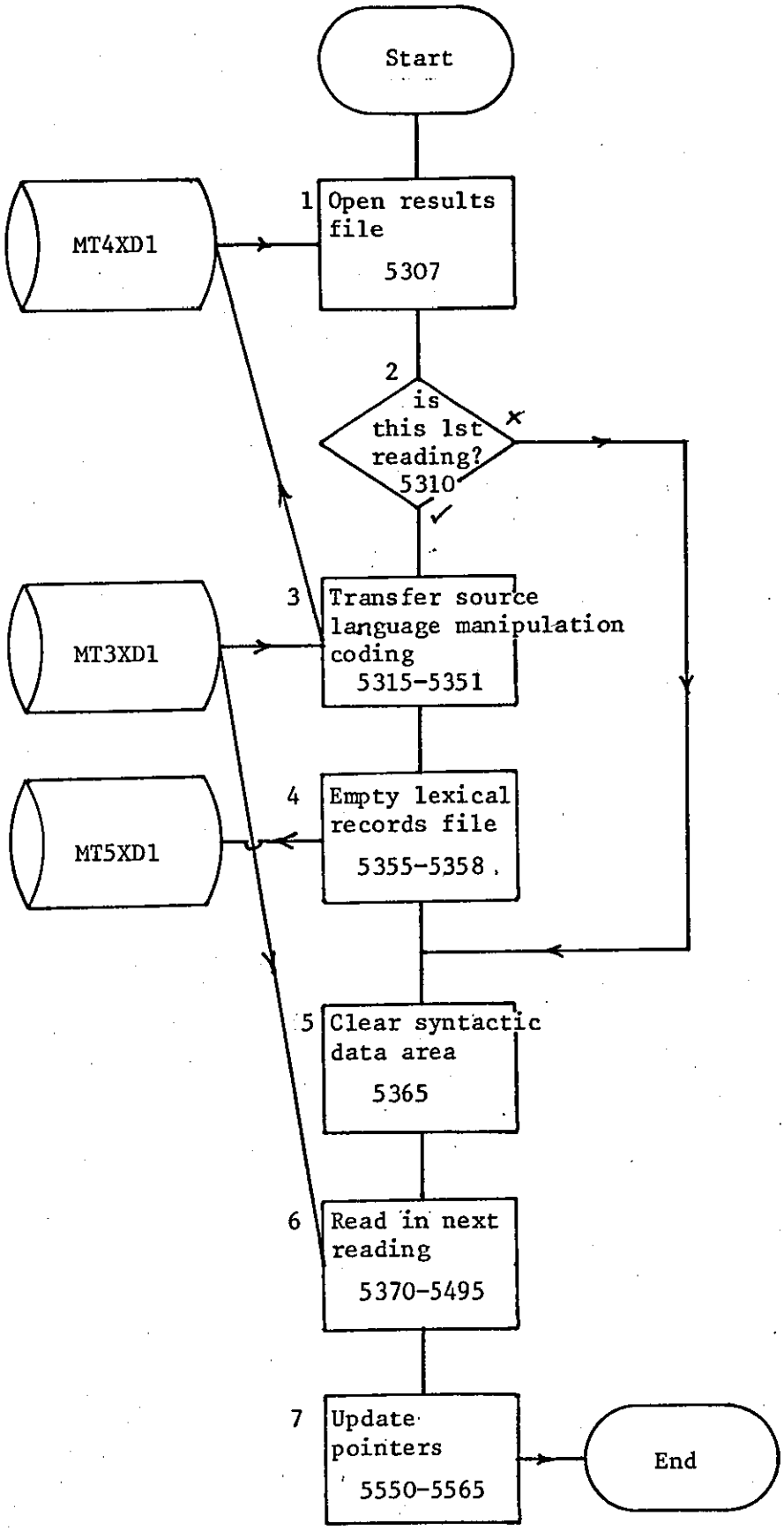

Generation 1 / LOAD NEXT-TL-TREE / Sheet 1 of 1 / MT41C1/15

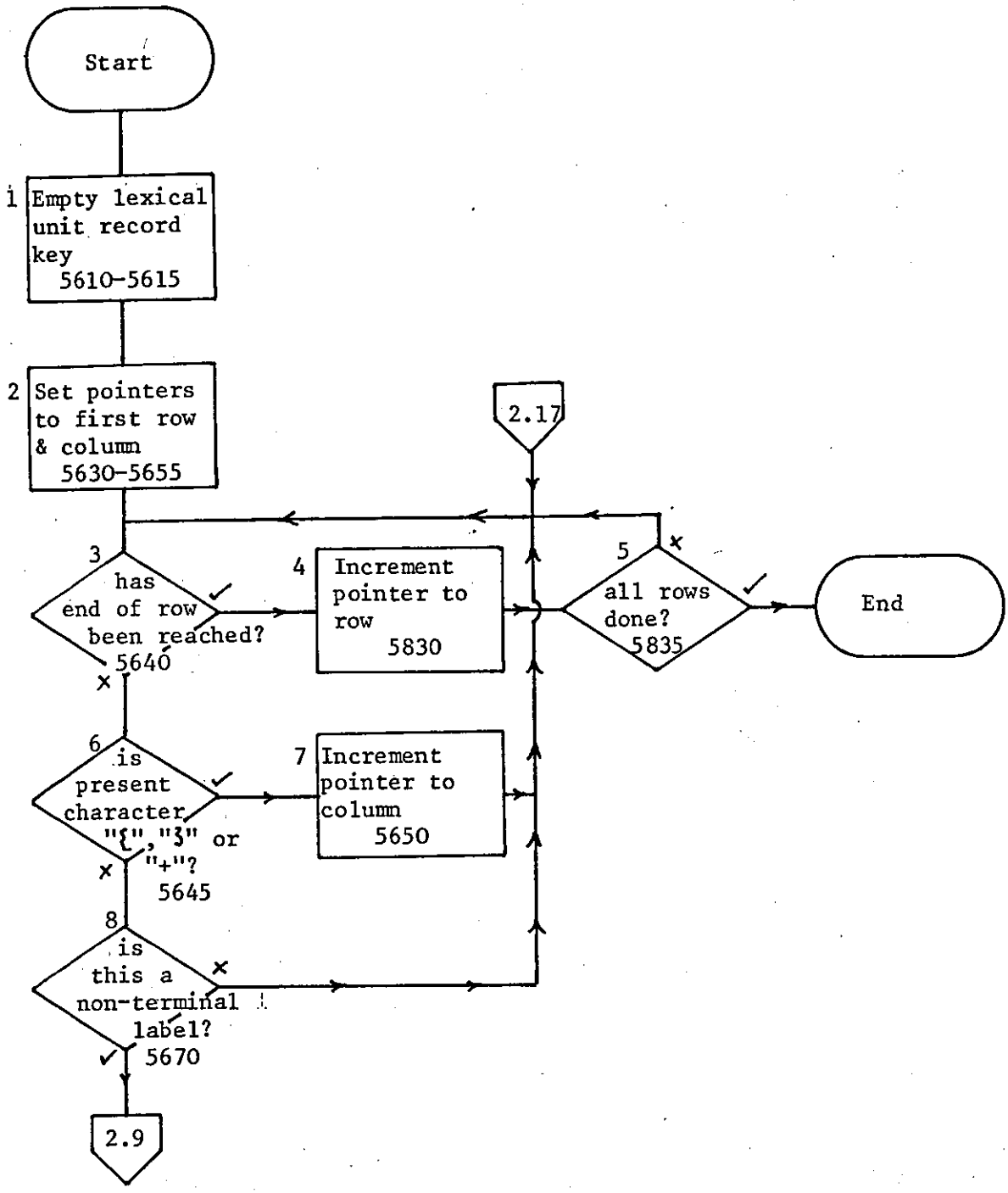

Generation 1 / LOAD RECORDS / Sheet 1 of 2 / MT41C1/16

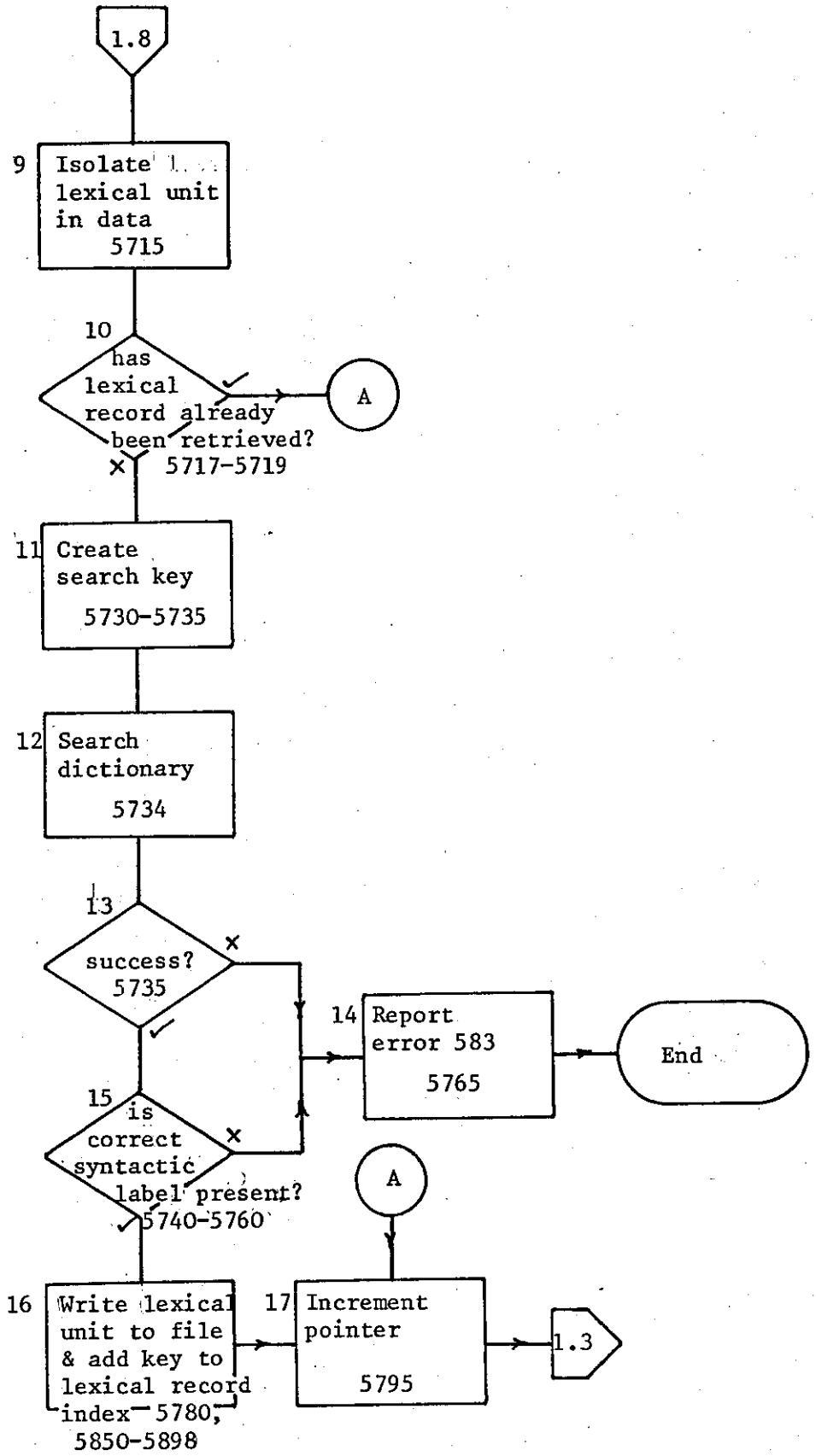

Generation 1 / LOAD RECORDS / Sheet 2 of 2 / MT41C1/16

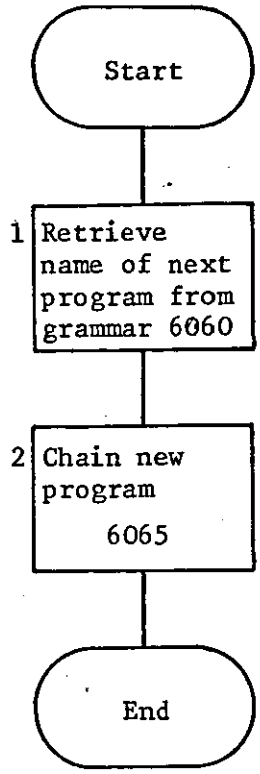
Start
1
Retrieve name of next program from grammar 6060
2
Chain new program
6065
End

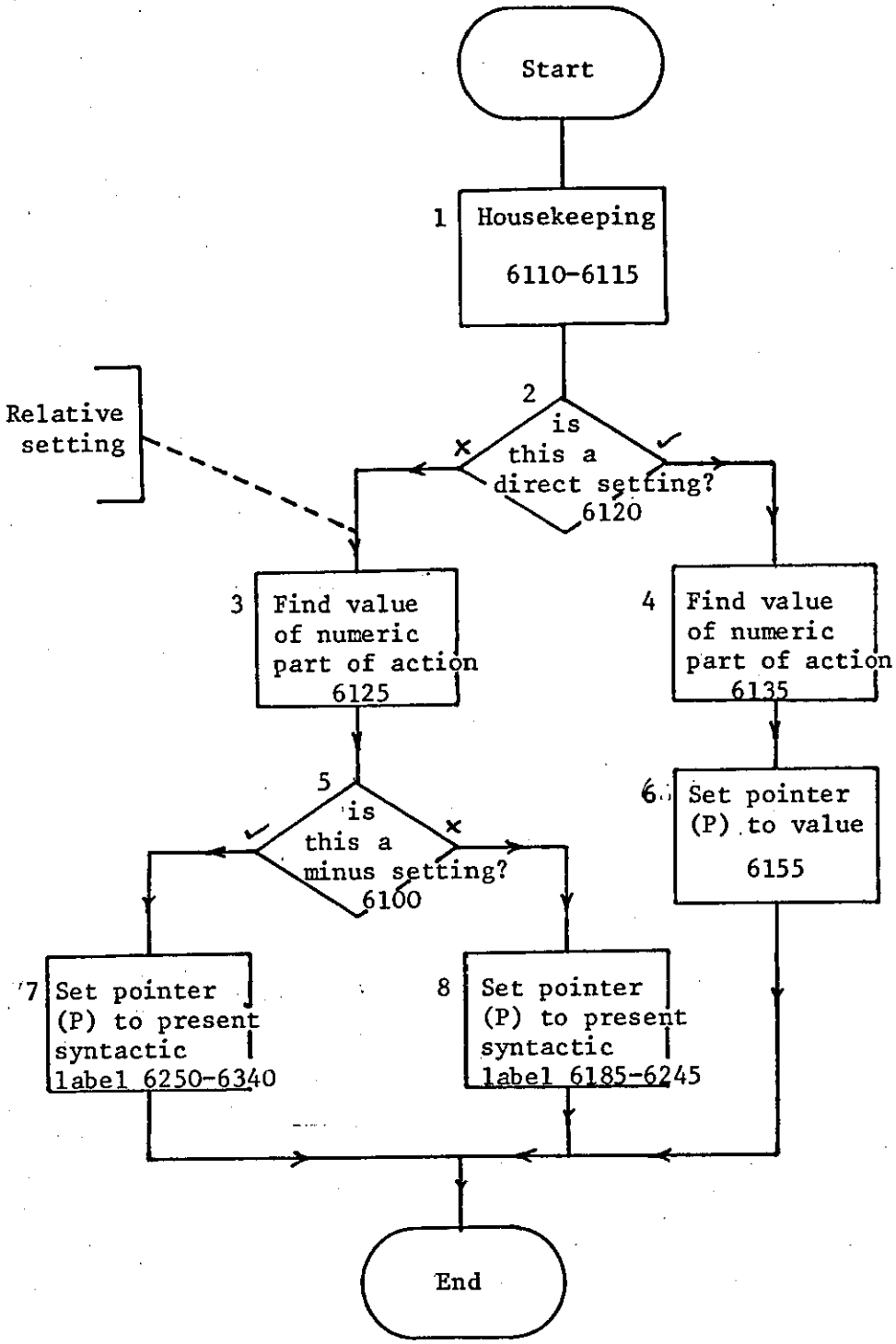

Generation 1 / SET UNIT / Sheet 1 of 1 / MT43C1/18

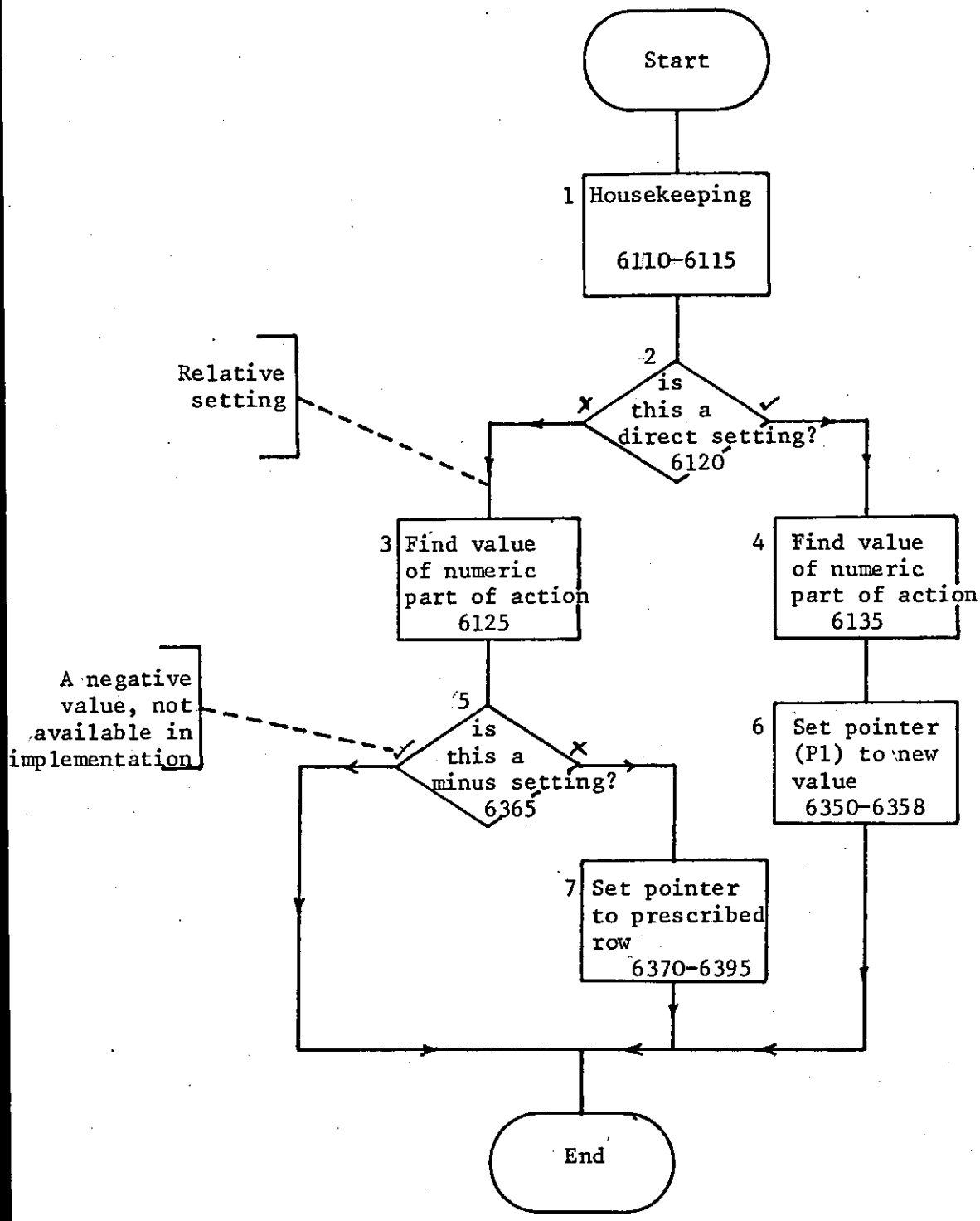

Generation 1 / SET PHRASE / Sheet 1 of 1 / MT41C1/19

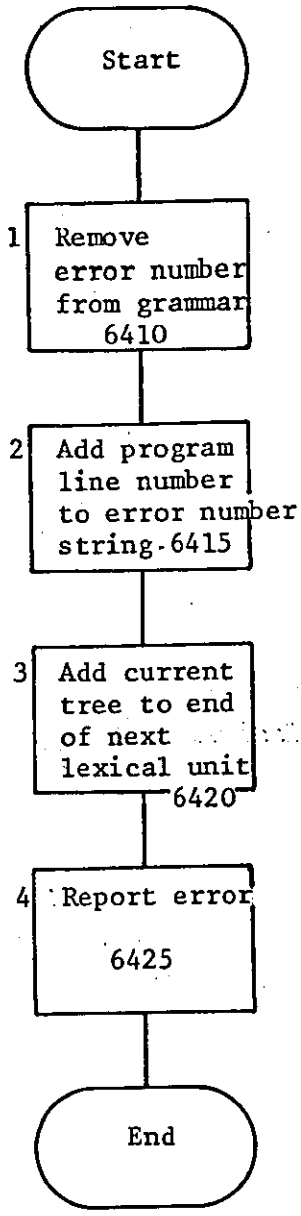

Generation 1 / ERROR / Sheet 1 of 1 / MT41C1/20

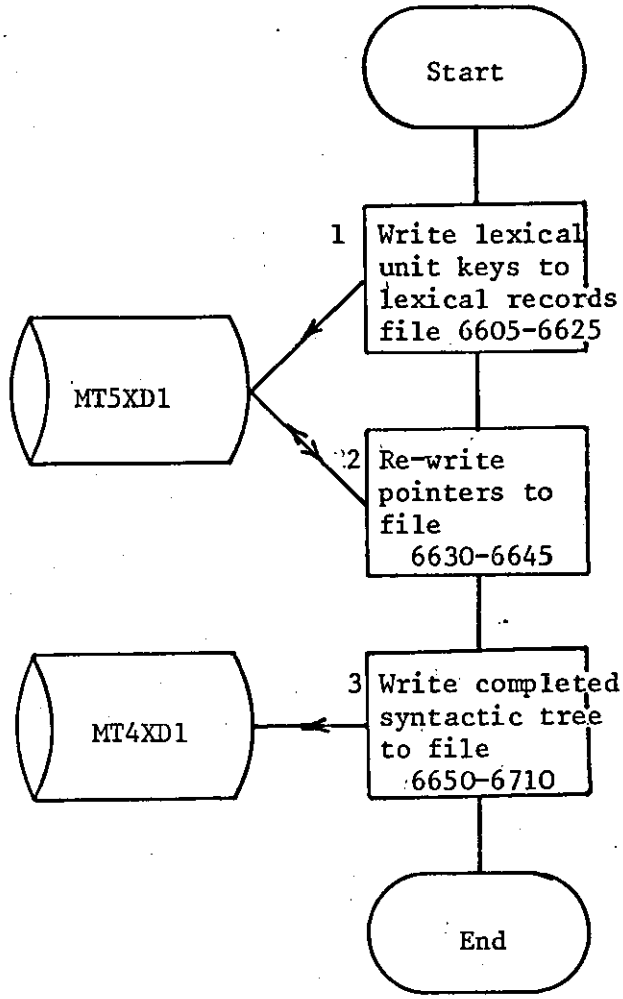

Generation 1 / WRITE TREES / Sheet 1 of 1 / MT41C1/21

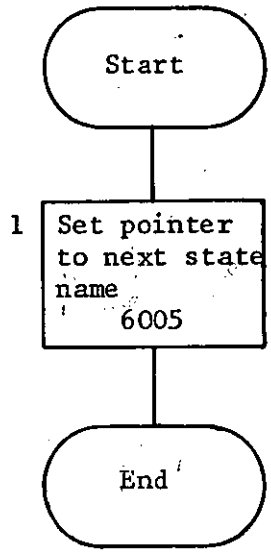
Start
1
Set pointer to next state name
6005
End

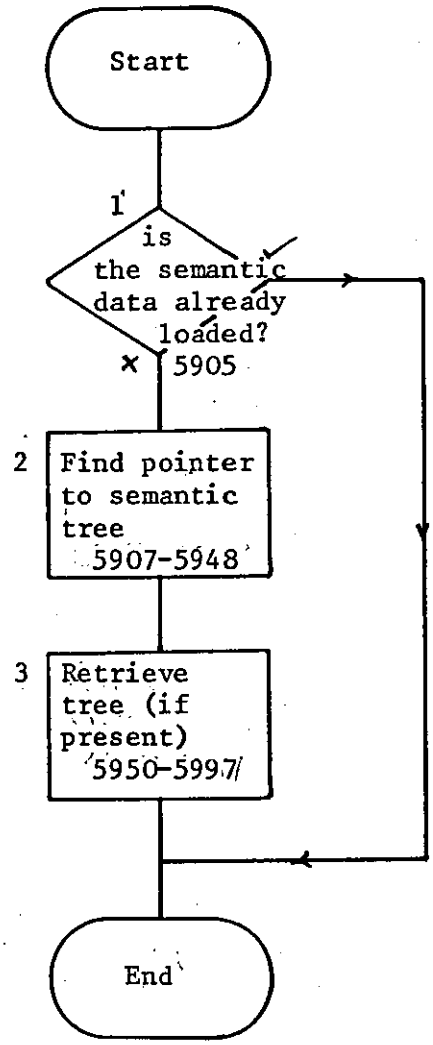

Generation / LOAD SEM-TREE / Sheet 1 of 1 / MT41C1/23

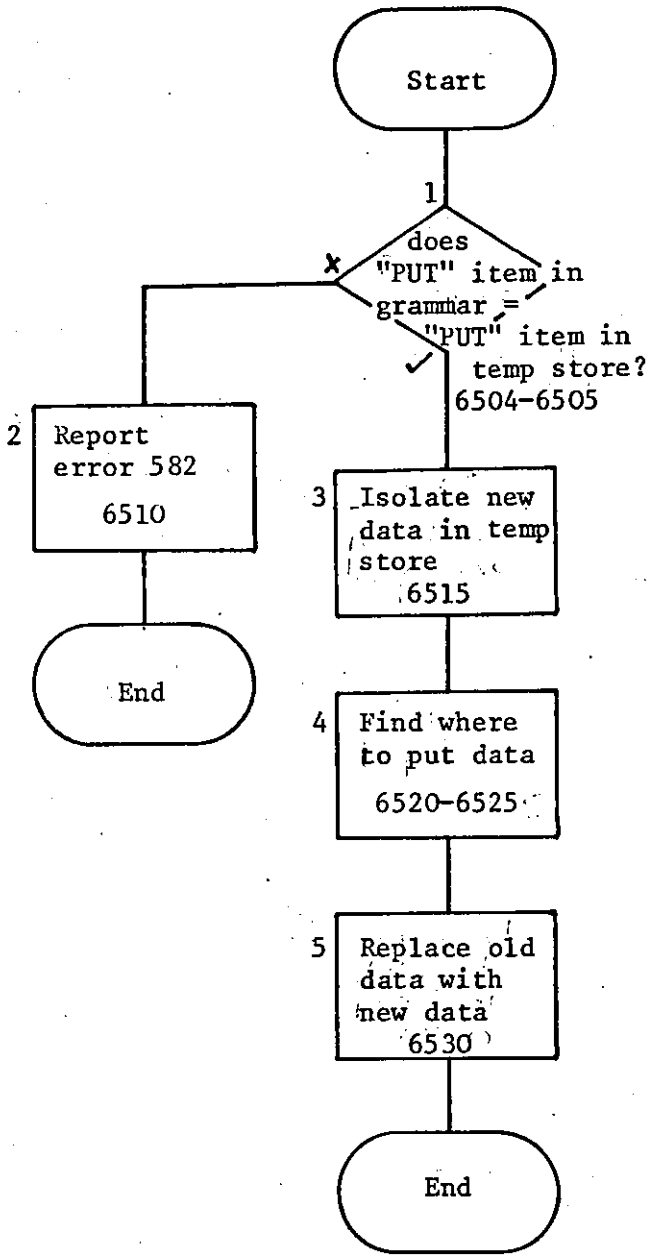

Generation / PUT / Sheet 1 of 1 / MT41C1/24

APPENDIX O

PROGRAM MT43C1 (GENERATION 2)

Program listing 337

Flowcharts 352

Generation 2 - MT43C1

```
1 REM Synthesis - P J Hancox - DLIS - LUT
3 PRINT FSP
5 ON ERROR GOTO 50
10 DIM D$(3),Y$(16),Y1$(18),Y3$(5)
20 FILE#2:"MT3XD1",2771 'TL syntactic structures
45 GOTO 100
49
50 'errors
55 X1=FNZ(ENC$(ERL,4)&ENC$(ERR,2))
99
100  X1=FNG("MTFSC2",2771) ' * * * load grammar
299
300 X$="S1" 'PROCESS GRAMMAR (first state)
349
350 X1=POS(G$,"("&X$&" ",1) 'find state
360 IF X1>0 THEN 400
365 X1=FNZ(ENC$(CUL,4)&ENC$(581,2)&X$) 'state not found
399
400 'state found - evaluate condition
405 X1=POS(G$," ",X1) 'start of IF /OR/ELSE condition
410 ON POS("~^%",SUB$(G$,X1+1,1),1)+1 GOTO 415,450,450,725
415 X2=CUL\ GOTO 1900
449
450 ' IF /OR (~/^) conditions
455 'LEFT-HAND SIDE MAT CHING
460 X1=X1+3 'start of first condition
465 ON OCC("dmtupP",SUB$(G$,X1,1))+1 GOTO 490,500
490 X2=CUL\ GOTO 1900 'error in grammar
499
500 'choose which conditions
505 ON POS("dmtupP",SUB$(G$,X1,1),1)
          GOSUB 2100,2200,3300,4000,4050,4100
510 GOTO 550
549
550 'evaluate results of match
555 IF X2>0 THEN 700 'success
560 'fail - so find next OR statement
565 IF OCC(SEG$(G$,X1,POS(G$,")",X1))," ^ ")=0 THEN 580
570 X1=POS(G$," ^ ",X1)
575 GOTO 410 'to state found - evaluate condition
580 IF OCC(SEG$(G$,X1,POS(G$,")",X1))," % ")=0 THEN 595
585 X1=POS(G$," % ",X1)
590 GOTO 410 'to state found - evaluate condition
595 X2=CUL\ GOTO 1900 'error in grammar
699
700 'success - but there are more conditions
705 IF OCC(SEG$(G$,X1,POS(G$," $ ",X1))," & ")=0 THEN 750 'none
710 X1=POS(G$," & ",X1)
715 GOTO 450 'to LHS matching
724
725 'ELSE condition
730 X1=POS(G$,"% ",X1)+2
735 GOTO 775 'RHS conditions
749
750 'LHS condition satisfied - do RHS action(s)
```

Generation 2 - MT43C1

```
755 X1=POS(G$," $ ",X1)+3 'set to start of RHS action
760 IF X1>0 THEN 775
765 X2=CUL\ GOTO 1900 'error in grammar
774
775 'choose action
780 IF OCC("DTRUt",SUB$(G$,X1,1))>0 THEN 800
785 IF OCC("pEWGC",SUB$(G$,X1,1))>0 THEN 810
790 IF SUB$(G$,X1,1)="g" THEN 7300 'load grammar
795 X2=CUL\ GOTO 1900 'error in grammar
799
800 ON POS("DTRUt",SUB$(G$,X1,1),1) GOSUB 5200,5300,5600,6100,6800
805 GOTO 850
810 ON POS("pEWGC",SUB$(G$,X1,1),1) GOSUB 6100,6400,6600,6000,6050
849
850 'end of action - are there more
852 X$=")^%"
853 X2=99999
855 FOR X3=1 TO LEN(X$)
860  X4=POS(G$,SUB$(X$,X3,1),X1)
865  IF X4=0 THEN 880
870  IF X4>X2 THEN 880
875  X2=X4
880 NEXT X3
885 IF OCC(SEG$(G$,X1,X2)," & ")=0 THEN 900 'done
890 X1=POS(G$," & ",X1)+3
895 GOTO 775
899
900 'done - so get next state
905 X1=POS(G$," S",X1+1)
910 IF X1=0 THEN 930
915 IF OCC("0123456789",SUB$(G$,X1+2,1))=1 THEN 935
930 X2=CUL\ GOTO 1900 'error in grammar
935 'state found
940 X$=SEG$(G$,X1+1,X1+2)
945 X2=X1+3
955 IF OCC("0123456789",SUB$(G$,X2,1))=0 THEN 350 'get next state
960 X$=X$&SUB$(G$,X2,1)
965 X2=X2+1
970 GOTO 955
999
1899
1900 'error in grammar
1905 X1=FNZ(ENC$(X2,4)&ENC$(582,2)&SUB$(G$,X1,36))
1999
2100 'LHS C ON DITI ON S * * * DICT (format = DICT=0 or DICT<>0)
2125 X2=LEN(D$(0)) 'is dictionary index empty
2150 'now evaluate choice
2155 IF SUB$(G$,X1+1,1)<>"=" THEN 2185
2165 IF X2=0 THEN 2180 ' = condition
2170 X2=0
2175 GOTO 2185
2180 X2=1
2185 RETURN
2199
2200 'format is: MORE-TL-TREES
```

Generation 2 - MT43C1

```
2220 'find if anything is in Y$()
2225 IF LEN(Y$(0))=0 THEN 2292 'find if anything is in Y$()
2230 IF DEC(SUB$(Y$(0),1,2))>=LOF(2) THEN 2296
2240 RESET#2:DEC(SUB$(Y$(0),1,2)) 'routine to find date records & copy
2245 READ#2:X$
2250 IF LEN(X$)<>3 THEN 2292
2255 IF SUB$(X$,1,1)<>"d" THEN 2292
2257 FILE#3:"MT4XD1",2771 'TL structures copy
2260 RESET#3:LOF(3)
2265 WRITE#3:X$
2270 FOR X2=1 TO 2
2275  READ#2:X$
2280  WRITE#3:X$
2285 NEXT X2
2287 FILE#3:"MT5XD1",2771 'LUs
2290 Y$(0)=RPL$(Y$(0),ENC$(LOC(2),2),1)\ GOTO 2230
2292 X2=1
2294 GOTO 2298
2296 X2=0
2298 RETURN
2299
3099
3100 'SUBROUTINE - find cat
3105 X3=POS(X2$,"#$",5)+2
3110 IF SUB$(X2$,X3,2)=X1$ RETURN
3115 X3=X3+6
3120 GOTO 3110
3300 'TREE
3350 'housekeeping
3355 X1=X1+2 'start of tree
3365 Y3$(0)=ENC$(P,2)&ENC$(0,2) 'start & end of phrase
3370 X2=P
3374
3375 'loop
3380 IF SUB$(G$,X1,1)="!" THEN 3825 'end reached
3382 IF X2>LEN(Y$(P1)) THEN 3800 'fails
3385 IF OCC("{}+",SUB$(G$,X1,1))>0 THEN 3450
3387 X3=0
3388 IF SUB$(G$,X1,1)<>"#" THEN 3390
3389 X3=1
3390 IF SUB$(G$,X1+X3,1)<"A" THEN 3475
3395 IF SUB$(G$,X1+X3,1)>"Z" THEN 3475
3399
3400 'a net
3405 GOSUB 3700 'test cat & load
3410 IF LEN(X$)=0 THEN 3800 'fails
3415 GOSUB 3765 'get conditions
3417 IF LEN(X$)=0 THEN 3430
3418 X2$=FNF$("",P1,X2) 'find case cat
3420 IF LEN(X2$)=0 THEN 3800 'fails
3421 X3=X2
3422 X1$="1"&SUB$(X2$,1,3)\ GOSUB 9000\X3=X2
3423 X2=X4
3424 X4=FNC(SUB$(X2$,4,2)&X$,X3) 'test conditions
3425 IF X4=0 THEN 3800 'fails
```

Generation 2 - MT43C1

```
3430 X2=X2+8
3433 IF SUB$(G$,X1,4)<>"+{#}" THEN 3447 'is this a blanket symbol
3435 X3=X2+1
3438 X3=POS(Y$(P1),"}",X3+1)
3440 IF OCC(SEG$(Y$(P1),X2,X3),"{")<>OCC(SEG$(Y$(P1),X2,X3),"}")
          THEN 3438
3443 Y3$(DEC(SUB$(Y3$(0),3,2)))=Y3$(DEC(SUB$(Y3$(0),3,2)))
          &SEG$(Y$(P1),X2,X3)
3445 X2=X3+1
3446 X1=X1+4
3447 GOTO 3380 'success
3449
3450 'tree symbol
3455 IF SUB$(G$,X1,1)<>SUB$(Y$(P1),X2,1) THEN 3800 'fails
3460 X1=X1+1
3465 X2=X2+1
3470 GOTO 3380 'get next item
3474
3475 'a unit
3480 GOSUB 3700 'test cat & load
3485 IF LEN(X$)=0 THEN 3800 'fails
3490 GOSUB 3765 'get conditions
3492 IF LEN(X$)=0 THEN 3505
3494 X1$="5"&SEG$(Y$(P1),POS(Y$(P1),"{",X2)+1,POS(Y$(P1),"}",X2)-1)
3495 X4=X2
3496 GOSUB 9000
3497 X3=X2\X2=X4
3498 X4=FNC(SUB$(Y$(P1),X2,2)&X$,X3) 'test conditions
3500 IF X4=0 THEN 3800 'fails
3505 X2=X2+8 'now test word
3510 X1=POS(G$,"{",X1) 'increment rule pointer
3524
3525 'test unit
3530 IF SUB$(G$,X1,3)="{#}" THEN 3575 'completely unconditional
3535 X2$=SEG$(G$,X1+1,POS(G$,"}",X1)-1)
3540 GOSUB 7015 'puts X2$ into a search format
3550 IF POS(Y$(P1),"}",X2)<X2+LEN(X2$)-1 THEN 3800 'too long to match
3555 IF OCC(SEG$(Y$(P1),X2,POS(Y$(P1),"}",X2)),X2$)=0 THEN 3800 'fails
3574
3575 'end
3580 X1=POS(G$,"}",X1)+1
3585 X2=POS(Y$(P1),"}",X2)+1
3590 GOTO 3380
3699
3700 'SUBROUTINE test cat & load
3703 IF SUB$(G$,X1,1)="#" THEN 3710
3705 IF SUB$(G$,X1,4)<>SUB$(Y$(P1),X2,4) THEN 3762 'fails
3710 X$="" 'find load no
3715 X3=X1+4
3720 IF OCC("0123456789",SUB$(G$,X3,1))=0 THEN 3740
3725 X$=X$&SUB$(G$,X3,1)
3730 X3=X3+1
3735 GOTO 3720
3740 IF LEN(X$)>0 THEN 3750
3745 X2=CUL\ GOTO 1900 'error in grammar
```

Generation 2 - MT43C1

```
3750 IF SUB$(G$,X1,1)<"A" THEN 3753
3751 IF SUB$(G$,X1,1)>"Z" THEN 3753\X2$="+"\ GOTO 3754
3753 X2$="}"
3754 Y3$(VAL(X$))=SEG$(Y$(P1),X2,POS(Y$(P1),X2$,X2+8)-OCC(X2$,"+"))
3756 Y3$(0)=RPL$(Y3$(0),ENC$(VAL(X$),2),3)
3758 X1=X3
3760 GOTO 3763
3762 X$=""
3763 RETURN
3764
3765 'SUBROUTINE are there any conditions
3767 IF SUB$(G$,X1,1)<>"[" THEN 3780
3770 X$=SEG$(G$,X1+1,POS(G$,"]",X1+1)-1)
3775 GOTO 3785
3780 X$=""
3785 RETURN
3799
3800 'endings
3805 X2=0
3810 MAT Y3$=NUL$
3815 Y3$(0)=""
3820 GOTO 3835
3825 Y3$(0)=Y3$(0)&ENC$(X2,2)
3830 X2=1
3835 RETURN
3999
4000 'UNIT
4001 'format is: UNIT=*END or UNIT<>*END
4005 IF POS(Y$(P1),"+",P+8)=0 THEN 4020
4010 X2=1 'more left
4015 GOTO 4025
4020 X2=0 'no more left
4025 IF SUB$(G$,X1+1,1)="=" THEN 2165
4030 RETURN 'ok
4050 'MORE-PHRASES
4051 'format is: MORE-PHRASES
4055 'find if end of Y$() has been reached
4060 IF DEC(SUB$(Y$(0),9,2))<>P1 THEN 4075 'yes, there are more
4065 X2=0
4070 GOTO 4080
4075 X2=1
4080 RETURN
4099
4100 'PHRASE
4101 'NP conditions are present items; VP are previous ones
4105 'first match phrase name
4110 X3=P1
4115 X4=P
4120 GOSUB 4300
4125 IF X2=0 THEN 4230 'fails
4130 IF SUB$(G$,X1+2,4)<>"VP  " THEN 4155 'get conditions
4135 X3=P1-1 'find previous NP
4140 X4=LEN(Y$(X3))
4145 GOSUB 4315
4150 IF X2=0 THEN 4230 'fails
```

Generation 2 - MT43C1

```
4152 X4=X2
4155 'get conditions
4160 X1=X1+6
4165 GOSUB 3765
4170 IF LEN(X$)=0 THEN 4240 'no conditions - so success
4172 X5=X2=0
4175 X1$="no  np  nn  "
4180 X2=POS(SUB$(Y$(X3),1,POS(Y$(X3),"}}",X4)),SUB$(X1$,1,4),X2+1)
4185 IF X<X5 THEN 4200
4190 X5=X2
4195 IF X2>0 THEN 4180
4200 X1$=SEG$(X1$,5,LEN(X1$))
4205 IF LEN(X1$)>0 THEN 4180
4210 X1$="5"&SEG$(Y$(X3),POS(Y$(X3),"{",X5)+1,POS(Y$(X3),"}",X5)-1)
4215 GOSUB 9000
4220 X4=FNC(SUB$(Y$(X3),X5,2)&X$,X2) 'evaluate conditions
4221 X1=POS(G$,"]",X1)
4222 IF X4>0 THEN 4240 'success
4224
4225 'endings
4230 X2=0 'fails
4235 GOTO 4245
4240 X2=1 'success
4245 X$=X1$=""
4250 RETURN
4299
4300 'SUBROUTINE find & test phrases
4305 X$=SUB$(G$,X1+2,4)
4310 GOTO 4325
4315 X$="NP  "
4325 X2=X5=0
4330 X5=POS(SUB$(Y$(X3),1,X4),X$,X5+1)
4335 IF X5=0 RETURN 'end reached
4360 X2=X5
4365 GOTO 4330
4399
5000 'RHS ACTI ON S
5100 'LOAD
5105 'formats
5106 'LOAD DICT=filename,volume (5200-5299)
5107 'LOAD NEXT -TL-TREE (5300-5599)
5108 'LOAD RECORDS (5600-5899)
5109 'LOAD SEMANTIC-TREE (5900-5999)
5199
5200 'LOAD DICT=filename,volume
5210 MAT D$=NUL$
5215 X2=POS(G$,",",X1)
5225 FILE#1:SEG$(G$,X1+2,X2-1),VAL(SEG$(G$,X2+1,POS(G$," ",X2)-1))
5230 READ#1:D$(0)
5235 READ#1:D$(1)
5240 READ#1:X$
5245 D$(1)=D$(1)&X$
5250 READ#1:D$(2) 'characters
5255 READ#1:X$
5260 D$(3)=D$(3)&X$
```

Generation 2 - MT43C1

```
5265 IF MORE#1 THEN 5255
5270 FILE#1:SUB$(D$(0),5,6),2771
5295 RETURN
5299
5300 'LOAD NEXT -TL-TREE
5305 'copies records 0-8 from MT3XD1 => MT4XD1
5306 'reads Downward, upward etc
5307 FILE#3:"MT4XD1",2771
5310 IF LEN(Y$(0))>0 THEN 5360 'not first reading
5315 SCRATCH#3
5320 MARGIN#3:MRG(2)
5325 RESET#2:0
5330 FOR X2=0 TO 8
5335  READ#2:X$
5340  WRITE#3:X$
5345 NEXT X2
5350 Y$(0)=ENC$(LOF(3),2)&ENC$(LOF(3),2)&ENC$(LOF(3),2)
5351 Y$(0)=Y$(0)&ENC$(LOF(3)-1,2)&ENC$(0,2)
5352 'end of section, phrase, reading, theme, length of matrix
5355 FILE#3:"MT5XD1",2771
5357 SCRATCH#3
5358 FILE#3:"MT4XD1",2771
5359
5360 'now read off tree
5365 MAT Y$=NUL$ 'this doesn't clear Y$(0)
5370 RESET#2:DEC(SUB$(Y$(0),1,2))
5385 READ#2:X$
5390 IF LEN(X$)<>2 THEN 5425 'not a theme record
5395 RESET#3:LOF(3) 'write to results file
5400 WRITE#3:X$
5405 Y$(0)=RPL$(Y$(0),ENC$(LOF(3)-1,2),7)
5410 READ#2:X$
5424
5425 'read records
5430 Y$(1)=X$
5435  X3=2 'pointer to store
5440  X2=0 'pointer to recs processed
5445  READ#2:Y$(X3)
5450  X2=X2+1
5455  IF LEN(Y$(X3))=2 THEN 5490
5460  IF DEC(SUB$(Y$(X3),1,2))=LEN(Y$(X3))-2 THEN 5485
5465  READ#2:X$
5470  X2=X2+1
5475  Y$(X3)=Y$(X3)&X$
5480  GOTO 5460
5485  Y$(X3)=SEG$(Y$(X3),3,LEN(Y$(X3)))
5490  X3=X3+1
5495 IF X2<>DEC(SUB$(Y$(1),2,2)) THEN 5445
5549
5550 'revise records
5555 Y$(0)=RPL$(Y$(0),ENC$(LOC(2),2)&ENC$(2,2),1)
           'pointer to next section
5560 Y$(0)=RPL$(Y$(0),ENC$(X3-1,2),9) 'length of matrix
5565 FILE#3:"MT5XD1",2771
5590 RETURN
```

Generation 2 - MT43C1

```
5599
5600 'LOAD RECORDS
5605 'go through each phrase & pick out lexical units
5610 MAT Y1$=NUL$
5615 Y1$(0)="0"
5625 'looping routine
5630 X4=3 'first phrase
5635 X5=1 'first item in phrase
5640 IF X5>LEN(Y$(X4)) THEN 5825 'end reached
5645 IF OCC("{}+",SUB$(Y$(X4),X5,1))=0 THEN 5660
5650 X5=X5+1
5655 GOTO 5640
5659
5660 'is this a phrase or unit
5665 IF SUB$(Y$(X4),X5,1)<"A" THEN 5700 'a unit
5670 IF SUB$(Y$(X4),X5,1)>"Z" THEN 5700 'a unit
5675 X5=X5+9 'increment pointer
5680 GOTO 5640 'do next item
5699
5700 'unit found - get LUs
5715 X$=SEG$(Y$(X4),X5+9,POS(Y$(X4),"}",X5+9)-1)
5717 X1$="5"&X$
5718 GOSUB 9000
5719 IF X2>0 THEN 5795
5730 IF OCC(X$,"#")=0 THEN 5734
5732 X$=RPL$(X$,"%",POS(X$,"#",1))
5733 Y$(X4)=RPL$(Y$(X4),X$,X5+9)\ GOTO 5730
5734 X$=FNA$(X$,0,0,0)
5735 IF LEN(X$)=0 THEN 5765 'error
5740 'check that correct category is present
5745 X3=POS(X1$,"#$",1)+2
5750 IF SUB$(X1$,X3,2)=SUB$(Y$(X4),X5,2) THEN 5775 'ok
5755 X3=X3+6
5760 IF SUB$(X1$,X3,2)<>"$[" THEN 5750
5765 X1=FNZ(ENC$(CUL,4)&ENC$(583,2)&X$)
5774
5775 'found
5780 GOSUB 5850 'write LU records to file
5795 X5=POS(Y$(X4),"}",X5+9)+1
5800 GOTO 5640
5824
5825 'phrase done - get next
5830 X4=X4+1
5835 IF X4>DEC(SUB$(Y$(0),9,2)) RETURN
5840 IF LEN(Y$(X4))=2 THEN 5830
5845 GOTO 5635 'start next phrase
5850 'SUBROUTINE write LU records to file
5855 X3=VAL(Y1$(0))+1
5860 Y1$(X3)=SUB$(Y$(X4),X5+4,4)
5865 IF LOF(3)>0 THEN 5875
5870 MARGIN#3:174
5873 WRITE#3:ENC$(0,2)
5875 Y1$(X3)=Y1$(X3)&SEG$(X1$,1,POS(X1$,"$[",1))&ENC$(LOF(3),2)
5880 X1$=ENC$(LEN(X1$),2)&X1$
5883 RESET#3:LOF(3)
```

Generation 2 - MT43C1

```
5885 WRITE#3:SEG$(X1$,1,MRG(3))
5887 X1$=SEG$(X1$,MRG(3)+1,LEN(X1$))
5890 IF LEN(X1$)>0 THEN 5885
5894 Y1$(0)=STR$(X3)
5898 RETURN
5899
5999
6000 'GOTO
6001 'format is: GOTO statename
6005 X1=POS(G$," ",X1)-1
6010 RETURN
6049
6050 'CHAIN
6051 'format is: CHAIN 'filename,volume'
6060 X$=SEG$(G$,X1+3,POS(G$,"'",X1+3)-1)
6065 CHAIN X$
6099
6100 'SET
6101 'format is: SET UNIT=+n or =n or =-n
6110 X2=POS(G$,"=",X1)
6115 X3=POS(G$," ",X1)-1
6120 IF OCC("-+",SUB$(G$,X2+1,1))=0 THEN 6135
6125 X4=VAL(SEG$(G$,X2+2,X3))
6130 GOTO 6175
6135 X4=VAL(SEG$(G$,X2+1,X3))
6149
6150 'this a direct rather than a relative setting of the pointer
6152 IF SUB$(G$,X1,1)="p" THEN 6350
6155 P=X4
6160 GOTO 6345 'to end
6174
6175 'relative settings
6177 IF SUB$(G$,X1,1)="p" THEN 6365
6180 IF SUB$(G$,X2+1,1)="-" THEN 6250
6185 X3=0
6195 IF SUB$(Y$(P1),P,1)<"A" THEN 6220 'a unit
6200 IF SUB$(Y$(P1),P,1)>"Z" THEN 6220 'a unit
6205 'a net
6210 P=P+9
6215 GOTO 6230
6220 'a unit
6225 P=POS(Y$(P1),"}",P+9)+1
6230 IF OCC("{}+",SUB$(Y$(P1),P,1))=0 THEN 6234
6232 P=P+1\ GOTO 6230
6234 IF P>LEN(Y$(P1)) THEN 6345
6235 X3=X3+1
6240 IF X3<>X4 THEN 6195
6245 GOTO 6345
6249
6250 'minus value
6255 IF P=0 THEN 6340
6260 IF OCC("{}+",SUB$(Y$(P1),P,1))=0 THEN 6275
6265 P=P+1
6270 GOTO 6255
6275 'find previous "+"
```

Generation 2 - MT43C1

```
6280 X3=P
6285 IF X3=1 THEN 6340
6290 IF SUB$(Y$(P1),X3,1)="+" THEN 6305
6295 X3=X3-1
6300 GOTO 6285
6305 IF SUB$(Y$(P1),X3+1,1)<>"{" THEN 6320
6310 X3=X3+1
6315 GOTO 6305
6320 X4=X4-1
6325 P=X3
6330 IF X4>0 THEN 6255
6335 GOTO 6345
6340 P=1
6345 RETURN
6349
6350 'SET-PHRASE
6352 P1=X4
6354 IF LEN(Y$(P1))>3 THEN 6397
6356 P1=P1+1
6358 GOTO 6354
6360 GOTO 6397
6365 IF SUB$(G$,X2+1,1)="-" THEN 6397
6370 X3=0
6375 IF P1>DEC(SUB$(Y$(0),9,2)) THEN 6397
6380 P1=P1+1
6385 IF LEN(Y$(P1))=2 THEN 6375
6390 X3=X3+1
6395 IF X3<>X4 THEN 6375
6397 RETURN
6399
6400 'ERROR
6405 'format is: ERROR='number'
6410 X2=VAL(SEG$(G$,X1+3,POS(G$,"'",X1+3)-1))
6415 X$=ENC$(CUL,4)&ENC$(X2,2)
6420 X$=X$&SEG$(Y$(P1),P,POS(Y$(P1),"}",P))
6425 X2=FNZ(X$) 'report error
6499
6600 'WRITE TREES
6605 X2=LOF(3)
6610 RESET#3:LOF(3)
6615 FOR X3=0 TO VAL(Y1$(0))
6620  WRITE#3:Y1$(X3)
6625 NEXT X3
6630 RESET#3:0
6635 READ#3:X$
6640 RESET#3:0
6645 WRITE#3:SEG$(X$,1,LEN(X$)-2)&ENC$(X2,2)&ENC$(LOF(3),2)
6649
6650 'write trees
6655 FILE#3:"MT4XD1",2771
6660 RESET#3:LOF(3)
6665 FOR X2=1 TO DEC(SUB$(Y$(0),9,2))
6670  IF LEN(Y$(X2))>3 THEN 6685
6675  WRITE#3:Y$(X2)
6680  GOTO 6705
```

Generation 2 - MT43C1

```
6685  Y$(X2)=ENC$(LEN(Y$(X2)),2)&Y$(X2) '
6690  WRITE#3:SUB$(Y$(X2),1,MRG(3))
6695  Y$(X2)=SEG$(Y$(X2),MRG(3)+1,LEN(Y$(X2)))
6700  IF LEN(Y$(X2))>0 THEN 6690
6705 NEXT X2
6710 FILE#3:"MT5XD1",2771
6715 RETURN
6800 'SUB
6801 'format = SUB-TREE=NAME+{name {unit}} etc
6805 X1=X1+2
6810 X$="" 'store for new tree
6815 'loop
6820 IF SUB$(G$,X1,1)="!" THEN 7175 'end reached
6825 IF OCC("{}+",SUB$(G$,X1,1))=0 THEN 6850
6830 X$=X$&SUB$(G$,X1,1) 'tree symbol
6835 X1=X1+1
6840 GOTO 6820
6849
6850 'a category of some type, so find load no.
6855 X1$="" 'clear no. store
6860 X2=X1+4
6865 IF OCC("0123456789",SUB$(G$,X2,1))=0 THEN 6885
6870 X1$=X1$&SUB$(G$,X2,1)
6875 X2=X2+1
6880 GOTO 6865
6885 IF LEN(X1$)>0 THEN 6895
6890 X2=CUL\ GOTO 1900 'report grammar error
6895 IF VAL(X1$)>0 THEN 6950 'a copy
6900 GOSUB 7250 'find next `+'
6905 X1$=SEG$(G$,X1,X2-1)
6910 X1=POS(X1$,"0",1)-1
6915 X1$=SUB$(X1$,1,X1)&PAK$(0,1)&ENC$(0,2)&PAK$(0,1)
          &SEG$(X1$,X1+2,LEN(X1$))
6920 X$=X$&X1$
6925 GOTO 7105 'increment pointer
6949
6950 'a copy
6955 IF SUB$(Y3$(VAL(X1$)),1,1)<"A" THEN 6965 'a terminal
6960 IF SUB$(Y3$(VAL(X1$)),1,1)<="Z" THEN 6975 'a net
6965 X3=X2\ GOSUB 7250 'find next `+'
6970 IF OCC(SEG$(G$,X1,X2),"%")>0 THEN 6985 'not a simple copy
6972 X$=X$&Y3$(VAL(X1$))
6973 X2=X3+3\ GOTO 7105
6975 X$=X$&Y3$(VAL(X1$))
6977 GOSUB 7250
6978 IF SUB$(G$,X2,4)<>"+{#}" THEN 6980
6979 X2=X2+4 'sets pointer to "}" after "+{#}"
6980 GOTO 7105 'increment pointer
6985 'not a simple copy - first find item in store
6990 X2$=X1$
6995 X3=VAL(X1$)
6999
7000 X1$="5"&SEG$(Y3$(X3),POS(Y3$(X3),"{",1)+1,LEN(Y3$(X3))-1)
7005 GOSUB 9000\X1$=X2$ 'X2 holds loc in store
7010 X2$=SEG$(G$,POS(G$,"{",X1)+1,POS(G$,"%",X1)-1)
```

Generation 2 - MT43C1

```
7012 GOSUB 7015\ GOTO 7040
7015 IF SUB$(X2$,1,1)="#" THEN 7025
7020 X2$="#{"&X2$
7025 IF SUB$(X2$,LEN(X2$),1)="#" THEN 7035
7030 X2$=X2$&"}#"
7035 X2$=SEG$(X2$,2,LEN(X2$)-1)
7037 RETURN
7040 IF LEN(X2$)>0 THEN 7045
7043 X3=POS(Y3$(VAL(X1$)),"}",9)-1\ GOTO 7047
7045 X3=POS(Y3$(VAL(X1$)),X2$,1)-1
7047 X4=LEN(X2$)-OCC(X2$,"{")-OCC(X2$,"}")
7050 X2$=SEG$(G$,POS(G$,"%",X1)+1,POS(G$,"}",X1)-1)
7055 IF SUB$(X2$,1,1)<>"#" THEN 7065
7060 X2$=SEG$(X2$,2,LEN(X2$))
7065 IF SUB$(X2$,LEN(X2$),1)<>"#" THEN 7075
7070 X2$=SUB$(X2$,1,LEN(X2$)-1)
7075 X5=VAL(X1$)
7080 Y3$(X5)=SUB$(Y3$(X5),1,X3)&X2$&SEG$(Y3$(X5),X3+X4+1,LEN(Y3$(X5)))
7085 X2$=SEG$(Y3$(X5),POS(Y3$(X5),"{",1)+1,POS(Y3$(X5),"}",1)-1)
7090 Y1$(X2)=SUB$(Y1$(X2),1,4)&X2$&"$!"&SEG$(Y1$(X2),5,LEN(Y1$(X2)))
7095 GOSUB 7250
7100 X$=X$&Y3$(VAL(X1$))
7105 X1=X2
7110 GOTO 6820
7175 'ending - concatenate
7180 X2=DEC(SUB$(Y3$(0),1,2))
7185 X3=DEC(SUB$(Y3$(0),5,2))
7190 IF SUB$(X$,LEN(X$),1)<>"{" THEN 7205
7195 IF SUB$(Y$(P1),X3,1)<>"+" THEN 7205
7200 X3=X3+1
7205 Y$(P1)=SUB$(Y$(P1),1,X2-1)&X$&SEG$(Y$(P1),X3,LEN(Y$(P1)))
7210 MAT Y3$=NUL$
7215 Y3$(0)=""
7220 IF SUB$(G$,X1+1,1)<>"*" THEN 5625
            'to routine for picking up new records
7225 RETURN
7249
7250 'SUBROUTINE
7255 X2=POS(SUB$(G$,1,POS(G$,"!",X1)),"+",X1)
7260 IF X2>0 THEN 7270
7265 X2=POS(G$,"!",X1)
7270 RETURN
7299
7300 'load grammar
7305  X$=SEG$(G$,X1+2,POS(G$,",",X1)-1)
7310  X1=FNG(X$,VAL(SUB$(G$,POS(G$,",",X1)+1,4)))
7315 GOTO 300
7499
7500 DEF FNA$(X$,X4,P,P1) 'search
7505  FOR P1=1 TO LEN(X$)
7510   P=POS(D$(2),SUB$(X$,P1,1),1)
7515   X4=X4+(P*(DEC(SUB$(D$(1),(P1*2)-1,2))))
7520  NEXT P1
7525  'key done - calculate hash no.
7530  X1$=ENC$(MOD(X4,DEC(SUB$(D$(0),1,2))),2)
```

Generation 2 - MT43C1

```
7549
7550  'search on core keys
7555  P=0 'start of dict -1
7560  P=POS(D$(3),X1$,P+1)
7565  IF P=0 THEN 7850
7570  IF MOD(P+3,4)<>0 THEN 7560
7674
7675  'key found - is this correct record
7680  RESET#1:DEC(SUB$(D$(3),P+2,2))
7685  READ#1:X1$
7690  'concatenate trailers (if necessary)
7695  IF DEC(SUB$(X1$,LEN(X1$)-1,2))=0 THEN 7800
7700  'binary search on backing store
7705  X4=0 'search area start
7710  P1=LOF(1) 'search area end
7715  RESET#1:INT((X4+P1)/2)
7720  READ#1:X2$
7725  IF SUB$(X2$,1,2)=SUB$(X1$,LEN(X1$)-1,2) THEN 7793
7730  IF SUB$(X2$,1,2)>SUB$(X1$,LEN(X1$)-1,2) THEN 7755 'in lower half
7735  'in upper half
7740  IF X4=(INT((X4+P1)/2))+1 THEN 7775 'failure to find trailer
7745  X4=(INT((X4+P1)/2))+1
7750  GOTO 7715
7755  'in lower half
7760  IF P1=INT((X4+P1)/2) THEN 7775 'failure to find trailer
7765  P1=INT((X4+P1)/2)
7770  GOTO 7715
7775  'failure to find trailers
7780  IF POS(SUB$(X1$,1,LEN(X1$)-4),"#",1)=0 THEN 7790
7785  X4=FNZ(ENC$(CUL,4)&ENC$(584,2)&SUB$(X1$,1,POS(X1$,"#",1)-1))
7790  X4=FNZ(ENC$(CUL,4)&ENC$(584,2)&SUB$(X1$,1,LEN(X1$)-4))
7793  'add trailer record
7795  X1$=SUB$(X1$,1,LEN(X1$)-4)&SEG$(X2$,3,LEN(X2$))
7797  GOTO 7695
7799
7800  'whole record retrieved
7805  IF LEN(X$)>LEN(X1$) THEN 7815
7810  IF X$&"#"=SUB$(X1$,1,LEN(X$)+1) THEN 7825 'found
7815  X1$=SUB$(D$(3),P,2)
7820  GOTO 7560 'continue search
7824
7825  X1$=SUB$(X1$,1,LEN(X1$)-4) 'success
7827  LET FNA$="!" 'success
7830  X$=X2$=""
7835  GOTO 7865
7849
7850  'endings
7855  LET FNA$=""
7860  X$=X1$=X2$=""
7865 FNEND
7999
8300 DEF FNC(X$,X3)
8302  IF X3=0 THEN 8515 'fails cos dealing with an unretrieved LU
8303  X2$=""
8330  RESET#3:DEC(SUB$(Y1$(X3),LEN(Y1$(X3))-1,2))
```

Generation 2 - MT43C1

```
8335  READ#3:X1$
8340  X2$=X2$&X1$
8345  IF DEC(SUB$(X2$,1,2))+2<>LEN(X2$) THEN 8335
8350  X2$=SEG$(X2$,3,LEN(X2$))
8355  X5=POS(X2$,"#$",1)+2
8360  IF SUB$(X2$,X5,2)=SUB$(X$,1,2) THEN 8375
8365  X5=X5+6
8370  GOTO 8360
8375  X2$=SEG$(X2$,DEC(SUB$(X2$,X5+4,2)),LEN(X2$))
8380  X$=SEG$(X$,3,LEN(X$))
8399
8400  'go through each condition
8405  X3=POS(X2$,SUB$(X$,1,2),1)+2
8410  X5=POS(X2$,"$",X3)
8415  X5=POS(SUB$(X2$,1,X5),SEG$(X$,4,POS(X$,"/",1)-1),X3)
8449
8450  'evaluate <> or =
8455  IF SUB$(X$,3,1)="=" THEN 8470
8460  IF X5=0 THEN 8475 'success
8465  GOTO 8515 'fails
8470  IF X5=0 THEN 8515 'fails
8475  'next condition
8480  X$=SEG$(X$,POS(X$,"/",1)+1,LEN(X$))
8485  IF LEN(X$)>0 THEN 8400
8499
8500  'ending
8505  LET FNC=1
8510  GOTO 8520
8515  LET FNC=0
8520  X$=X1$=X2$=""
8525 FNEND
8999
9000 'find item in Y1$()
9005 X2=1
9020 IF X2>VAL(Y1$(0)) THEN 9045 'not found
9025 IF VAL(SUB$(X1$,1,1))+LEN(X1$)-1>LEN(Y1$(X2)) THEN 9035
9030 IF SUB$(Y1$(X2),VAL(SUB$(X1$,1,1)),LEN(X1$)-1)
          =SEG$(X1$,2,LEN(X1$))RETURN
9035 X2=X2+1
9040 GOTO 9020
9045 X2=0
9050 RETURN
9100 DEF FNF$(X$,X1,X2)
9105  IF SUB$(Y$(X1),X2,4)<>"VP  " THEN 9150
9110  X1=X1-1
9115  X2=LEN(Y$(X1))-3
9120  IF X2=0 THEN 9180 'fails
9125  IF SUB$(Y$(X1),X2,4)="NP  " THEN 9150
9130  X2=X2-1
9135  GOTO 9120
9149
9150  'item found
9155  X$=SUB$(Y$(X1),X2+4,3)
9160  X2=POS(Y$(X1),X$,X2+8)
9165  IF X2=0 THEN 9180 'fails
```

Generation 2 - MT43C1

```
9170  LET FNF$=X$&SUB$(Y$(X1),X2-4,2)
9175  GOTO 9185
9180  LET FNF$=""
9185  X$=""
9190 FNEND
9199
9300 DEF FNG(X$,X2) 'load grammar
9305  FILE#1:X$,X2
9310  G$=""
9315  READ#1:X$
9320  G$=G$&X$
9325  IF MORE#1 THEN 9315
9330  X$=""
9335  IF LEN(D$(0))=0 THEN 9360
9350  FILE#1:SUB$(D$(0),5,6),2771
9360 FNEND
9800 'SUBROUTINE read LU data
9805  RESET#3:DEC(SUB$(Y1$(X2),LEN(Y1$(X2))-1,2))
9810  READ#3:X2$
9815  IF DEC(SUB$(X2$,1,2))=LEN(X2$)-2 THEN 9835
9820  READ#3:X1$
9825  X2$=X2$&X1$
9830  GOTO 9815
9835  X2$=SEG$(X2$,3,LEN(X2$))
9840 RETURN
9899
9900 DEF FNZ(X$) 'error reporting
9905  PRINT DEC(SUB$(X$,1,4)),DEC(SUB$(X$,5,2))
9910  NO ERROR
9915  FILE#1:"ERROR",2771
9920  IF LOF(1)>0 THEN 9950
9930  SCRATCH#1
9940  MARGIN#1:174
9950  RESET#1:LOF(1)
9952  FILE#2:"MT1XD1",2771
9954  RESET#2:0
9956  READ#2:X1$
9960  WRITE#1:"MT41C1"&SUB$(X1$,5,2)&SUB$(X$,1,MRG(1)-8)
9970  CHAIN "MT11C1,2771"
9990 FNEND
9999 END
```

* * * END OF PRINT * * *

FLOWCHARTS

	Page
Main routine - MT43C1/1	353
DICT - MT43C1/2	355
MORE-TL-TREES - MT43C1/3	356
TREE - MT43C1/4	357
Test category and load - MT43C1/5	359
Retrieve case category - MT43C1/6	360
Test conditions - MT43C1/7	361
UNIT - MT43C1/8	362
MORE-PHRASES - MT43C1/9	363
PHRASE - MT43C1/13	364
LOAD DICT - MT43C1/14	365
LOAD NEXT-TL-TREE - MT43C1/15	366
LOAD RECORDS - MT43C1/16	367
CHAIN - MT43C1/17	369
SET UNIT - MT43C1/18	370
SET PHRASE - MT43C1/19	371
ERROR - MT43C1/20	372
WRITE TREES - MT43C1/21	373
GOTO - MT43C1/22	374
SUB TREE - MT43C1/25	375
Form search key - MT43C1/26	376

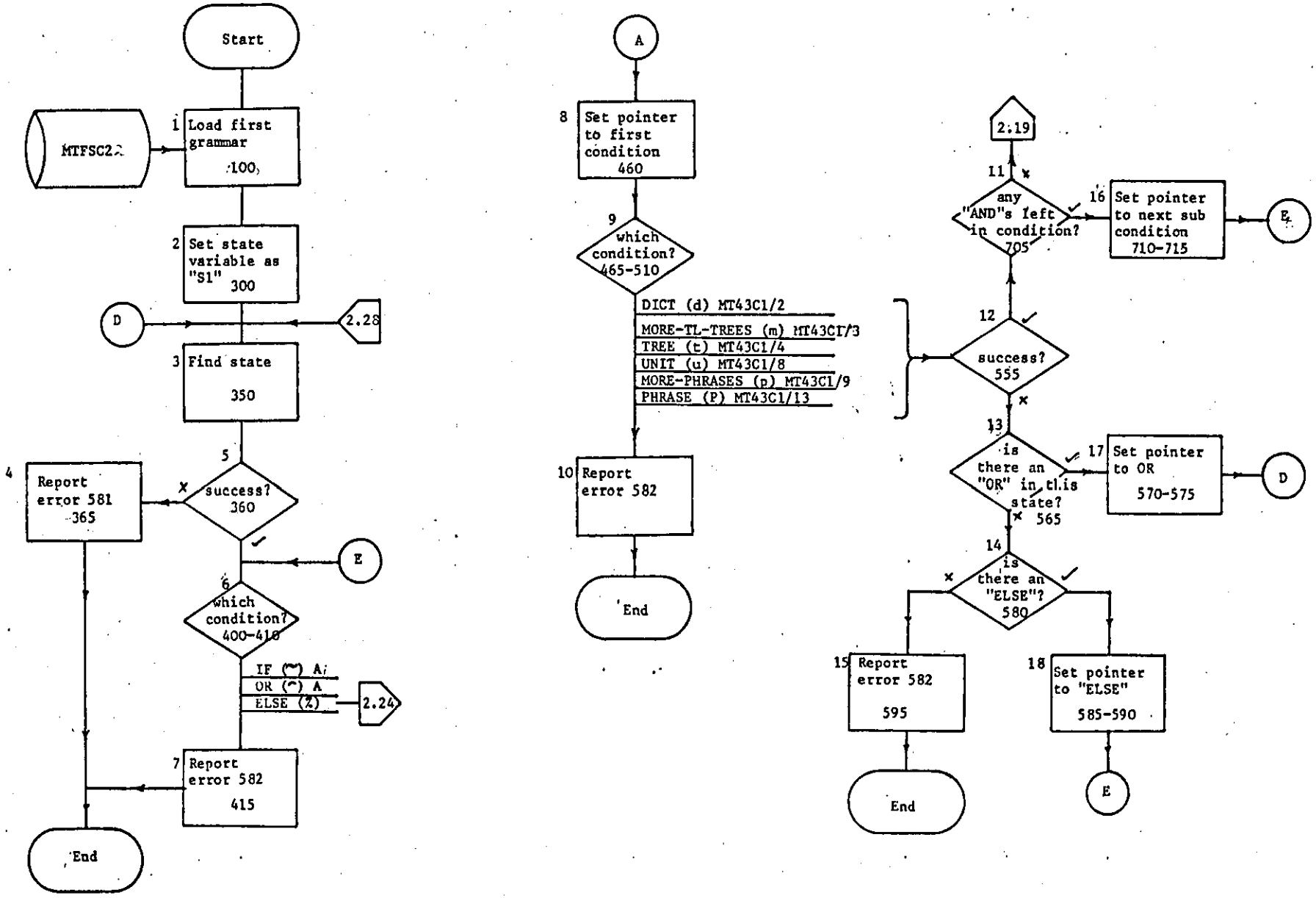

Generation 2 / main routine / Sheet 1 of 2 / MT43C1/1

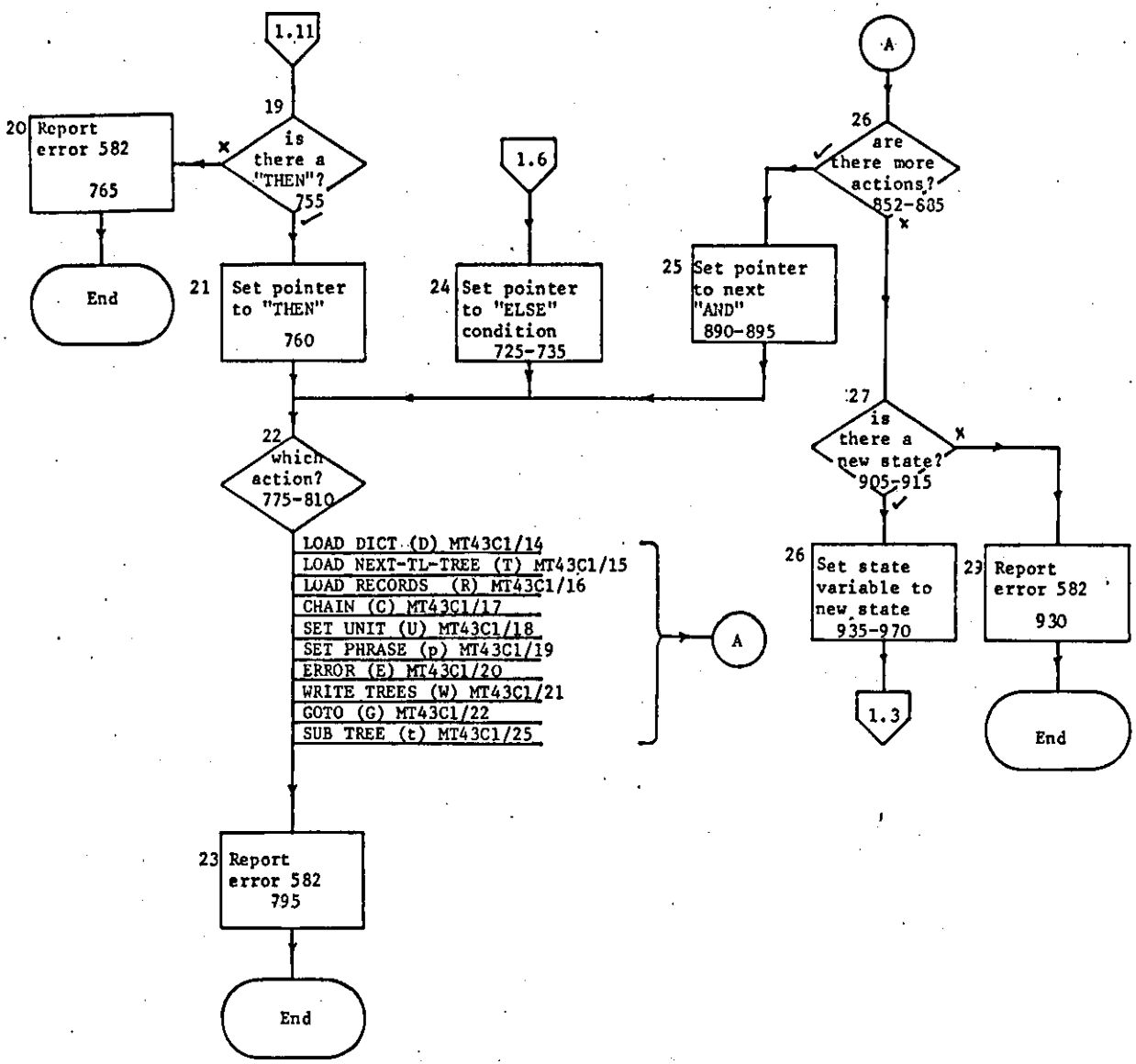

Generation 2 / main routine / Sheet 2 of 2 / MT43C1/1

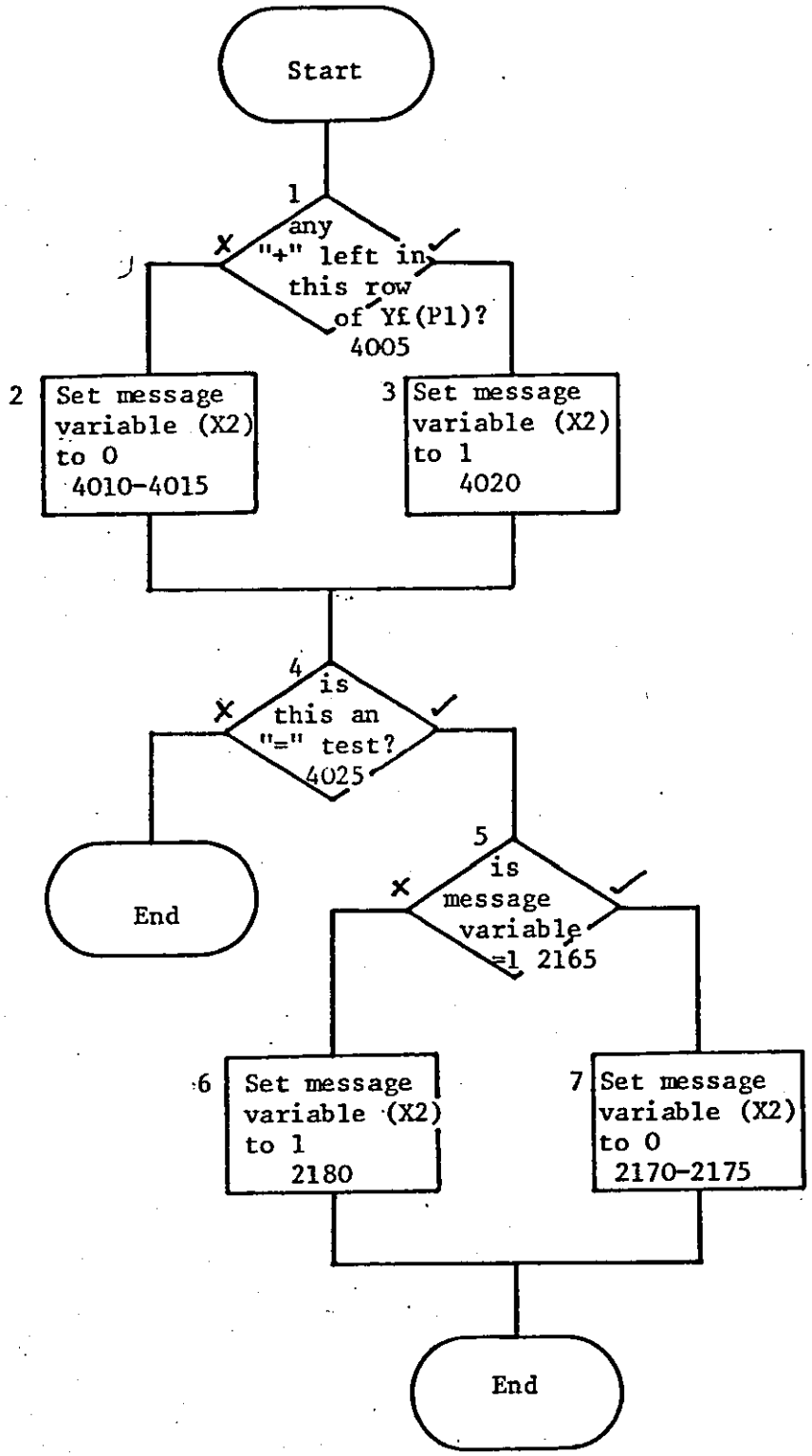

Generation 2 / DICT / Sheet 1 of 1 / MT43C1/2

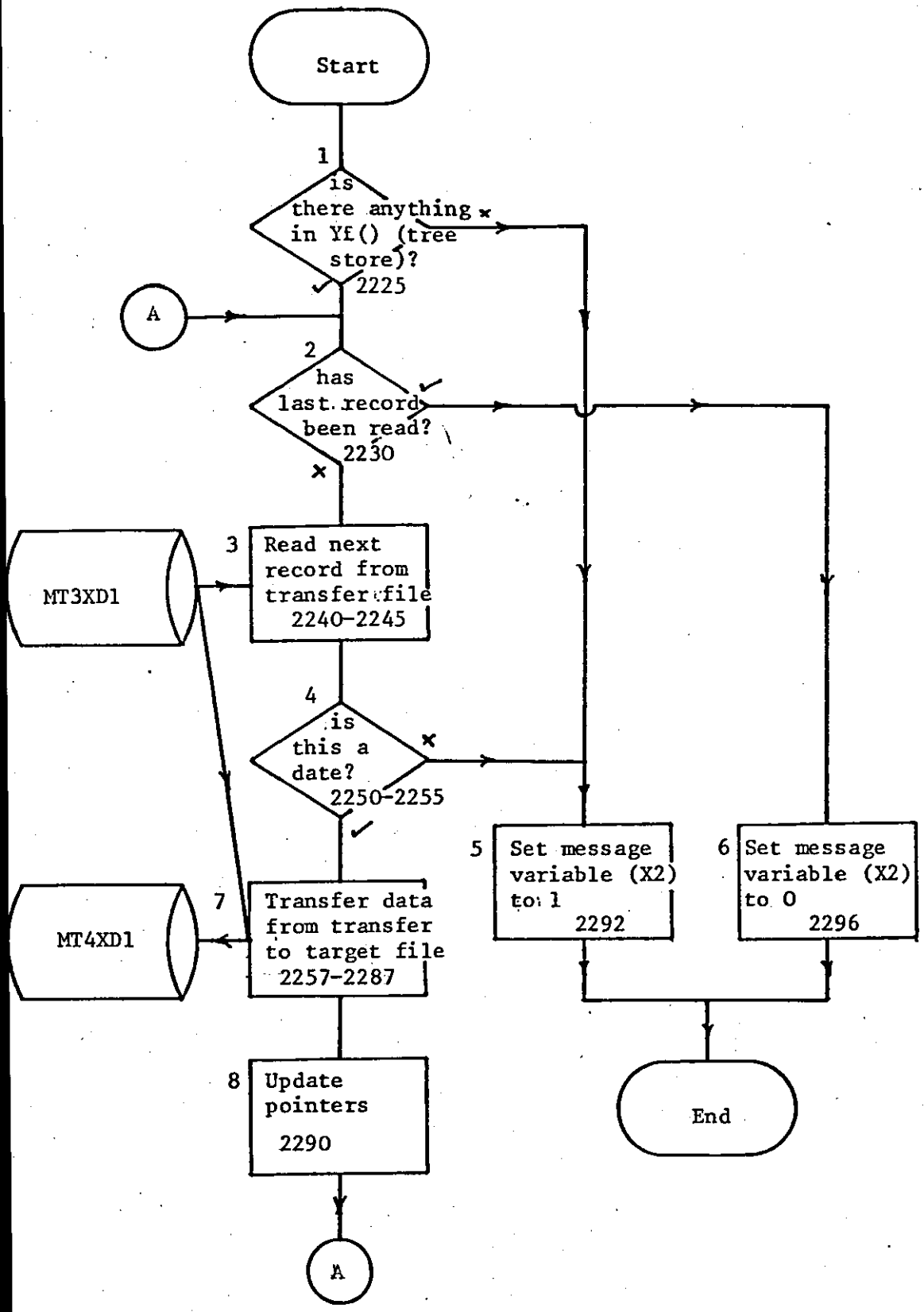

Generation 2 / MORE-TL-TREES / Sheet 1 of 1 / MT43C1/3

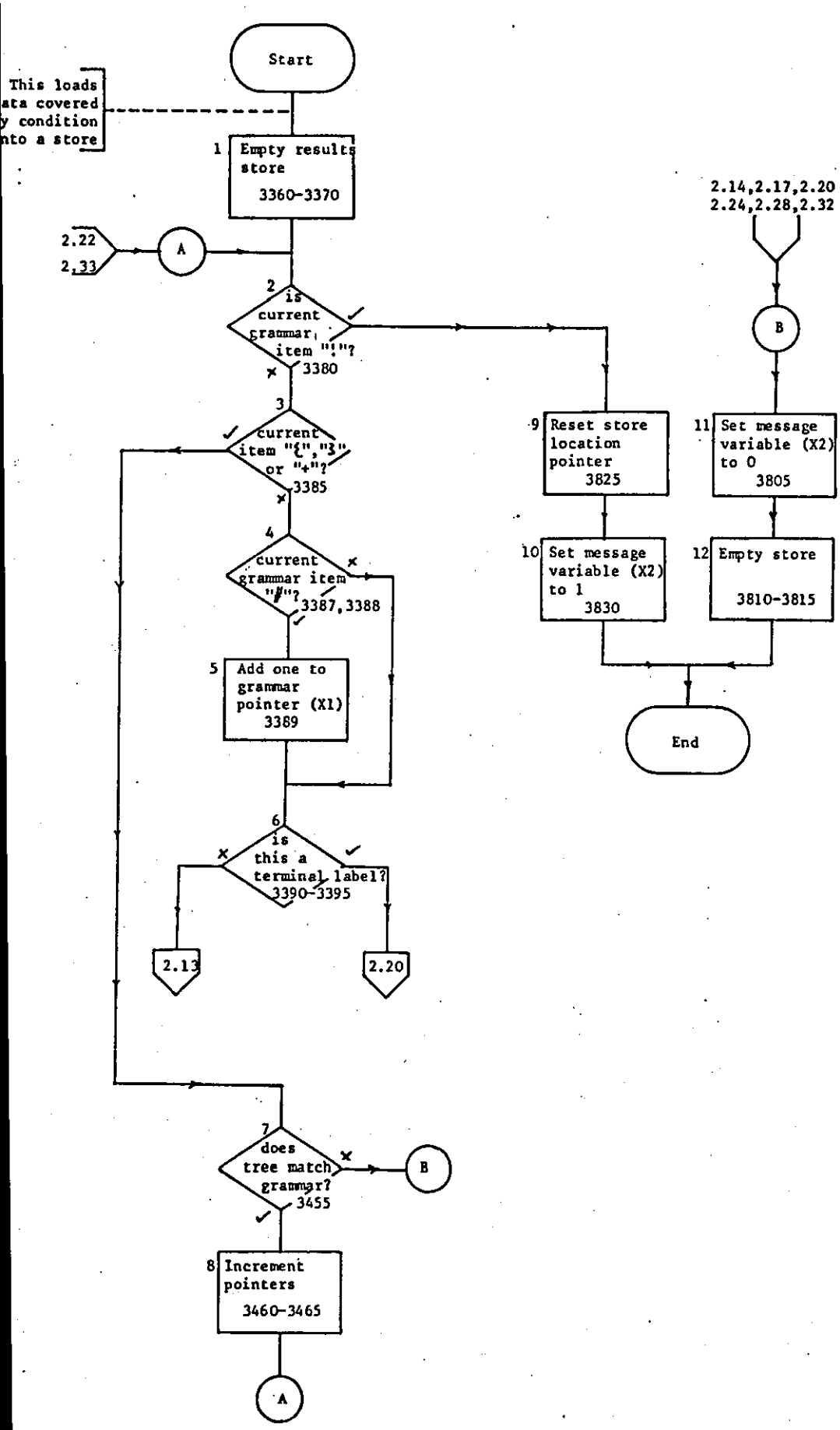

Generation 2 / TREE / Sheet 1 of 2 / MT43C1/4

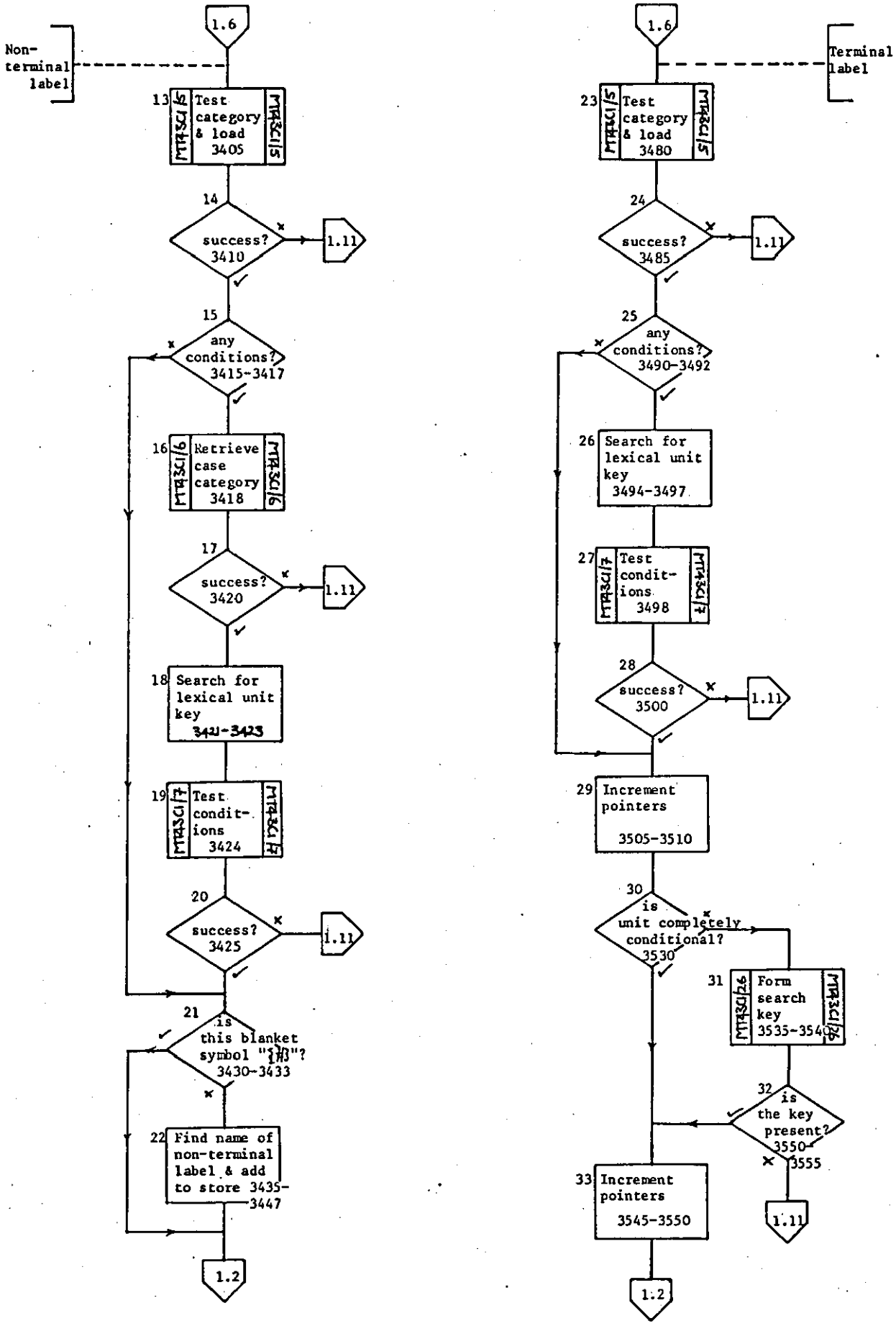

Generation 2 / TREE / Sheet 2 of 2 / MT43C1/4

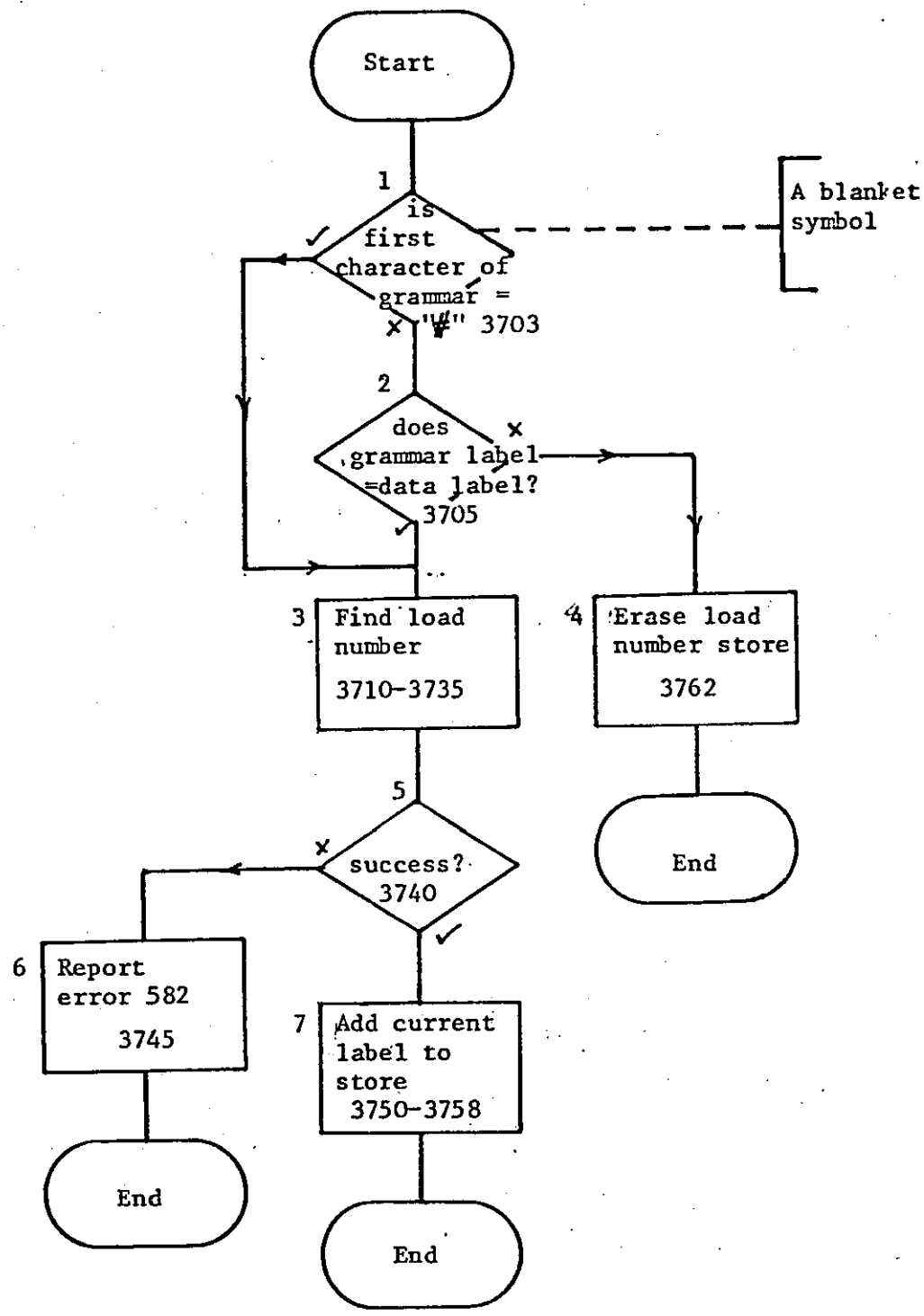

Generation 2 / test category and load / Sheet 1 of 1 / MT43C1/5

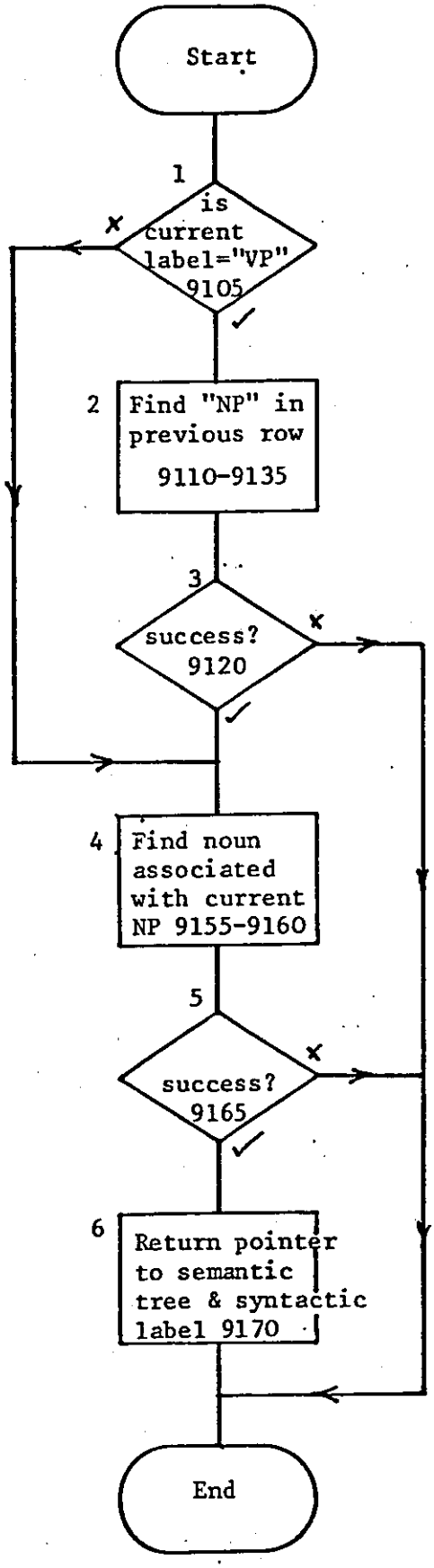

Generation 2 / Retreive case category /Sheet 1 of 1 /MT43C1/6

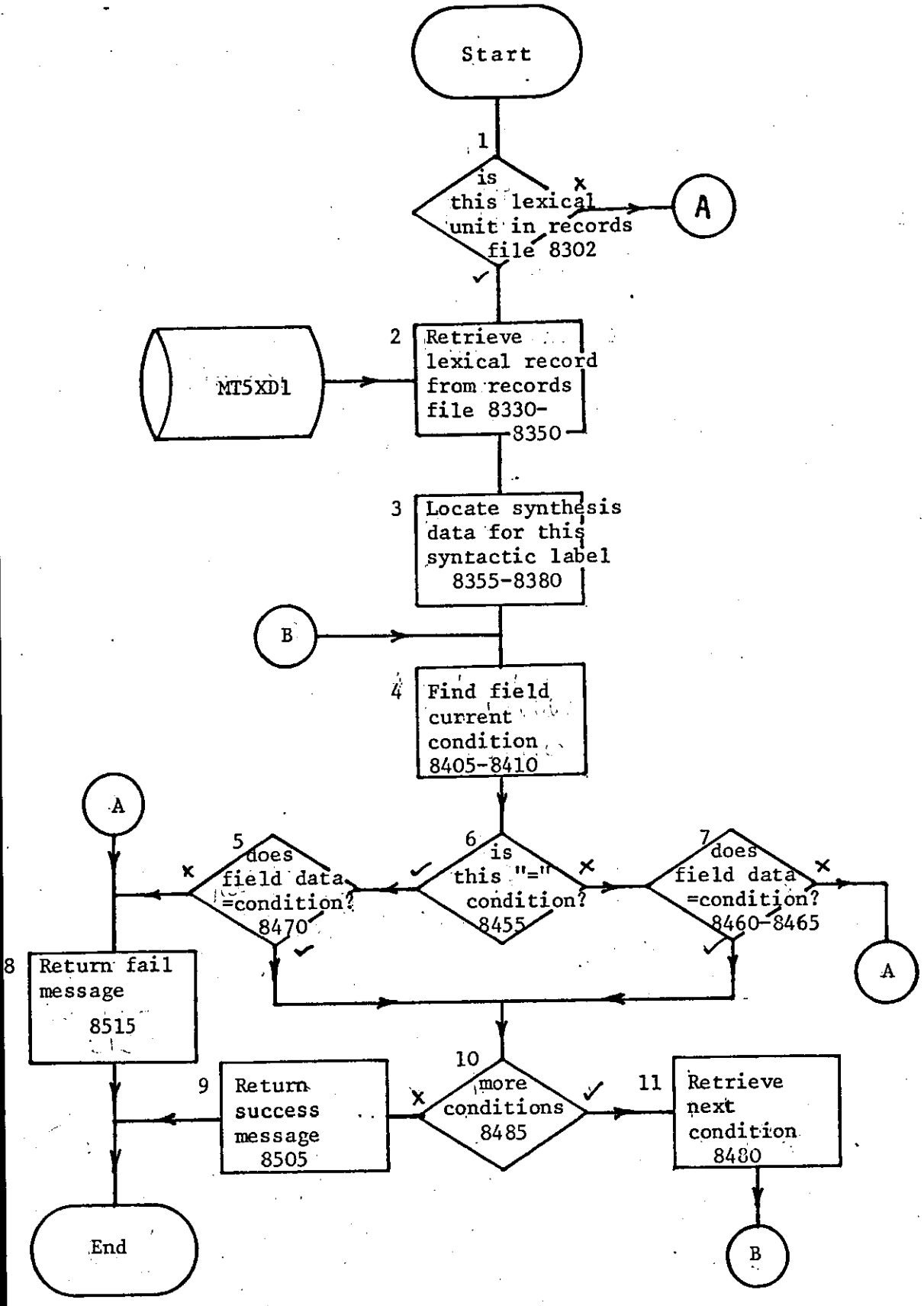

Generation 2 / test conditions / Sheet 1 of 1 / MT43C1/7

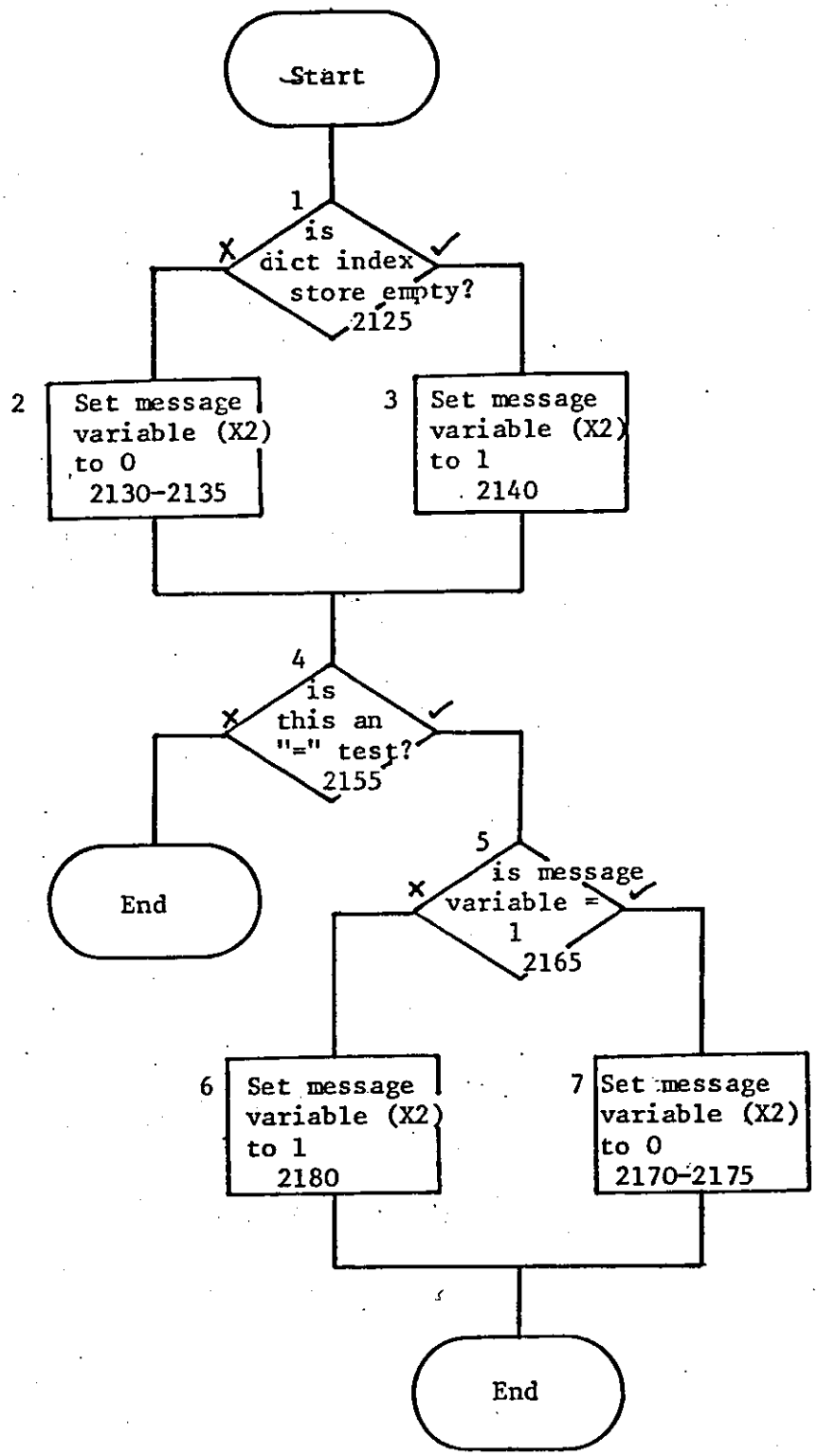

Generation 2 / UNIT / Sheet 1 of 1 MT43C1/8

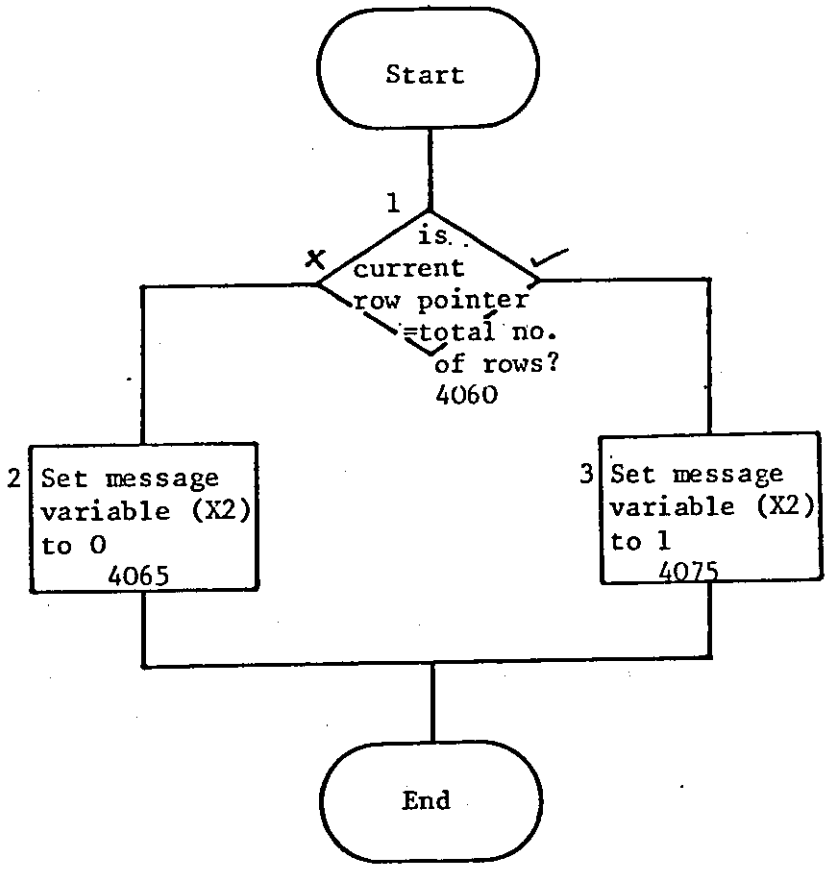

Generation 2 / MORE-PHRASES / Sheet 1 of 1 / MT43C1/9

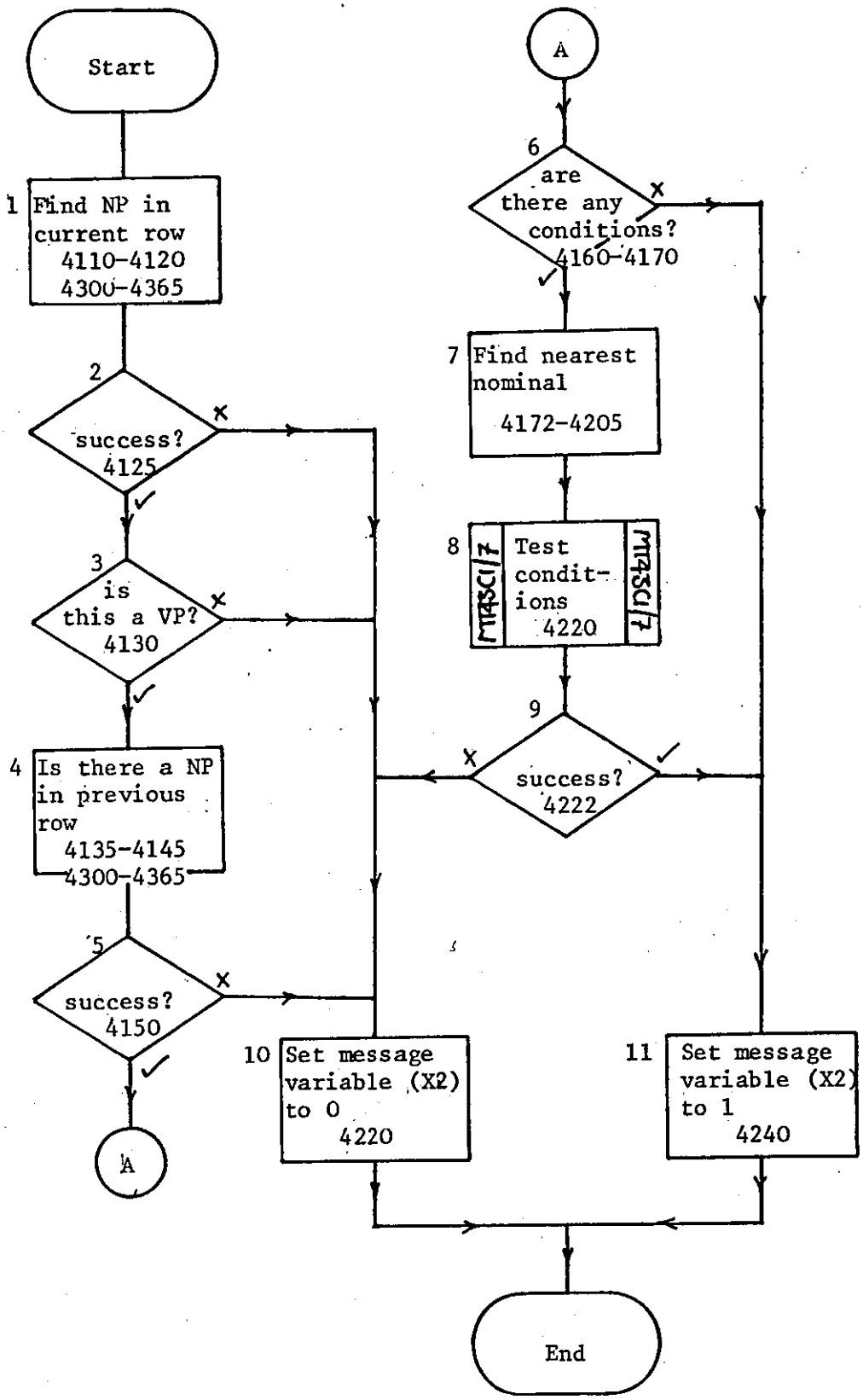

Generation 2 / PHRASE / Sheet 1 of 1 / MT43C1/13

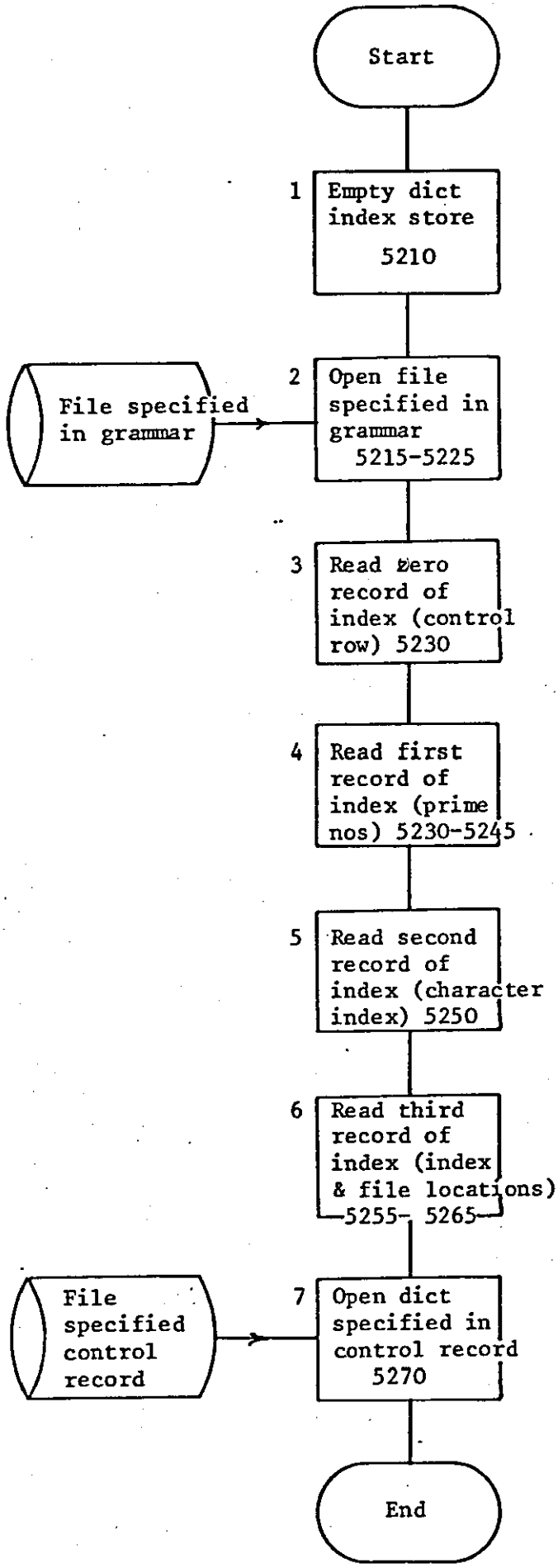

Generation 2 / LOAD DICT / Sheet 1 of 1 / MT43C1/14

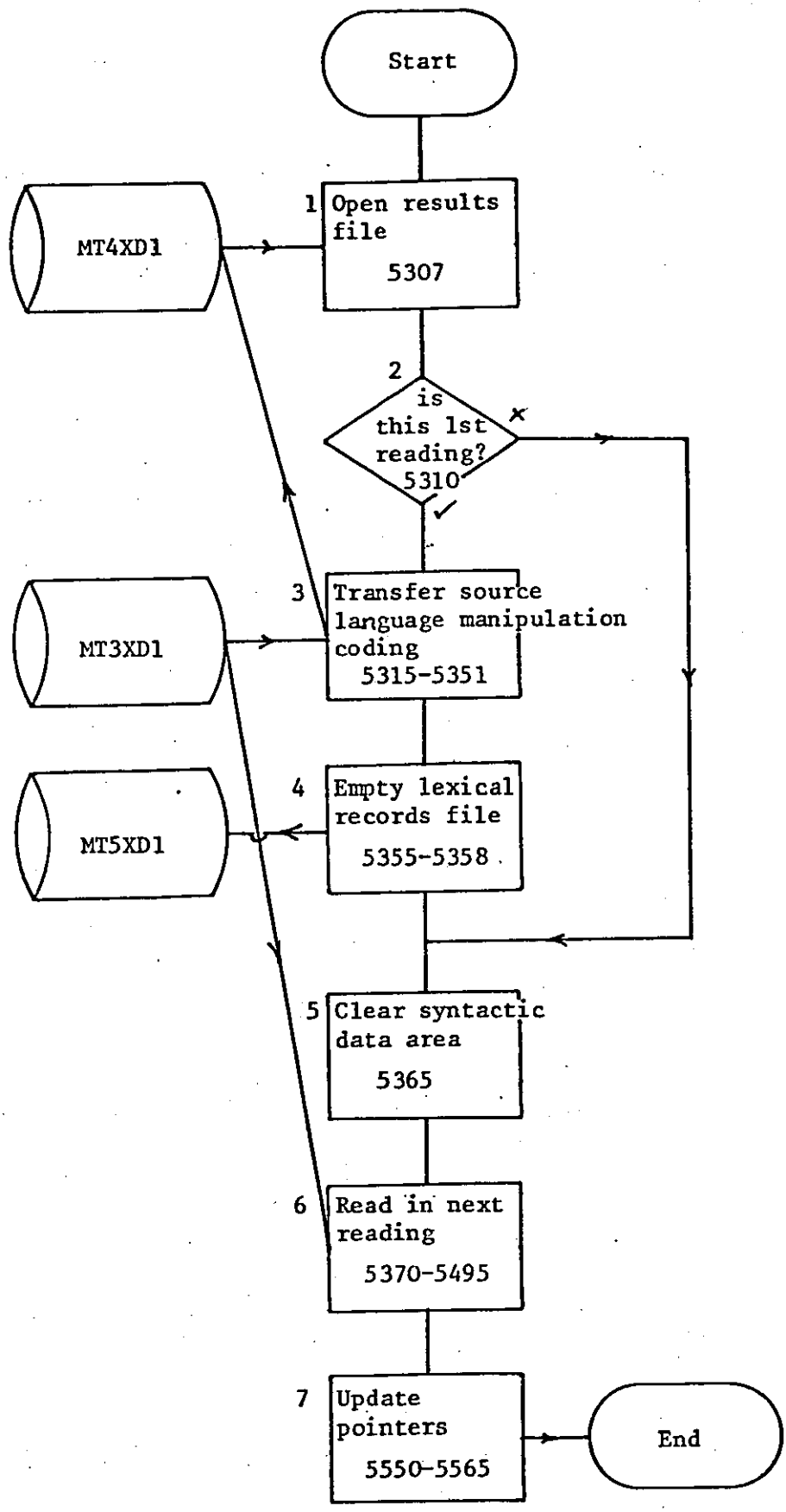

Generation 2 / LOAD NEXT-TL-TREE / Sheet 1 of 1 / MT43C1/15

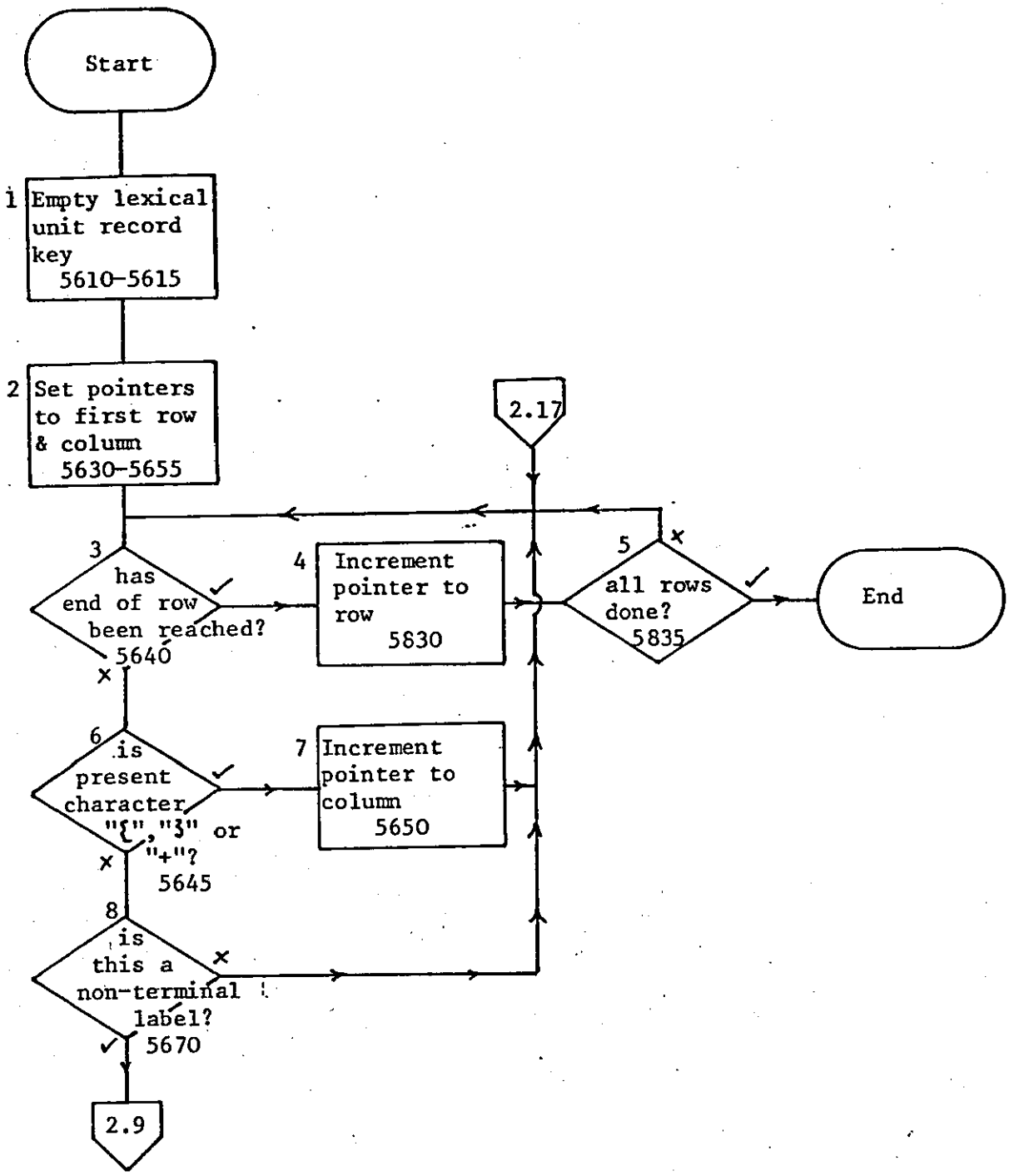

Generation 2 / LOAD RECORDS / Sheet 1 of 2 / MT43C1/16

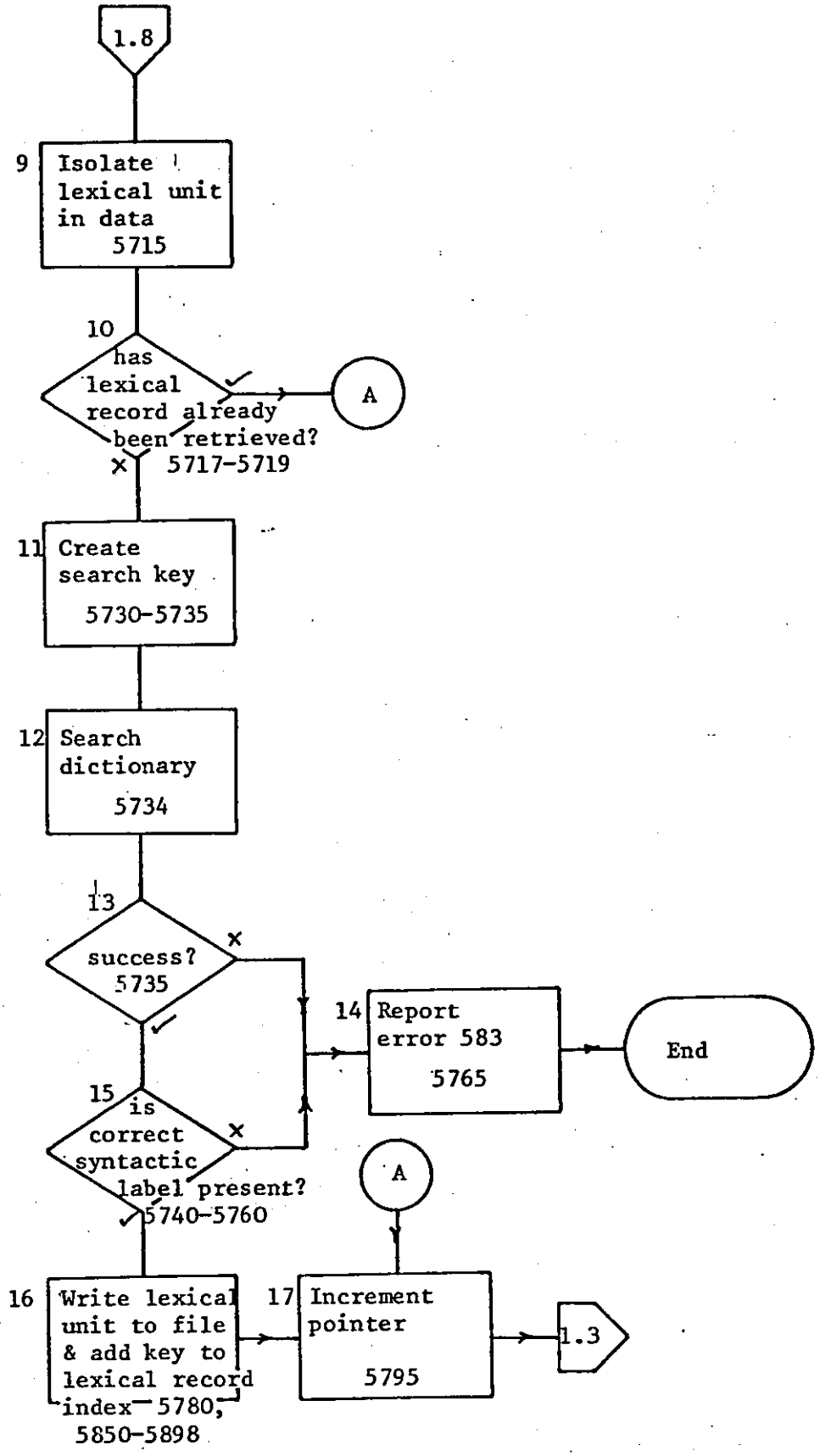

Generation 2 / LOAD RECORDS / Sheet 2 of 2 / MT43C1/16

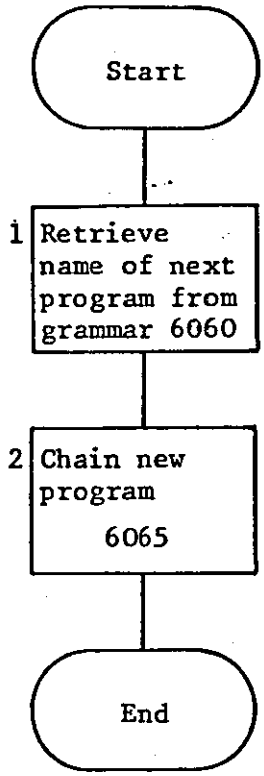

Generation 2 / CHAIN / Sheet 1 of 1 / MT43C1/17

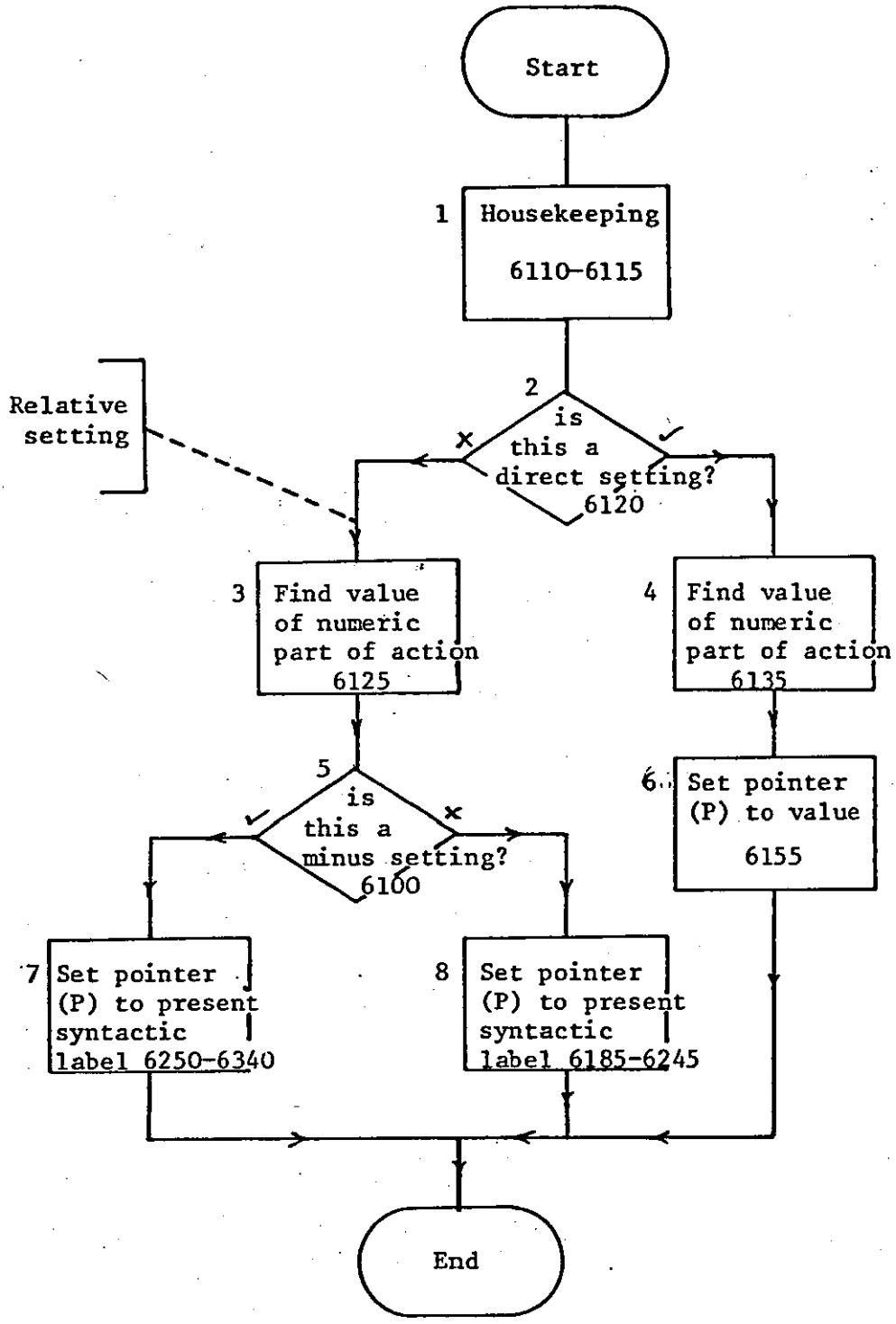

Generation 2 / SET UNIT / Sheet 1 of 1 / MT43C1/18

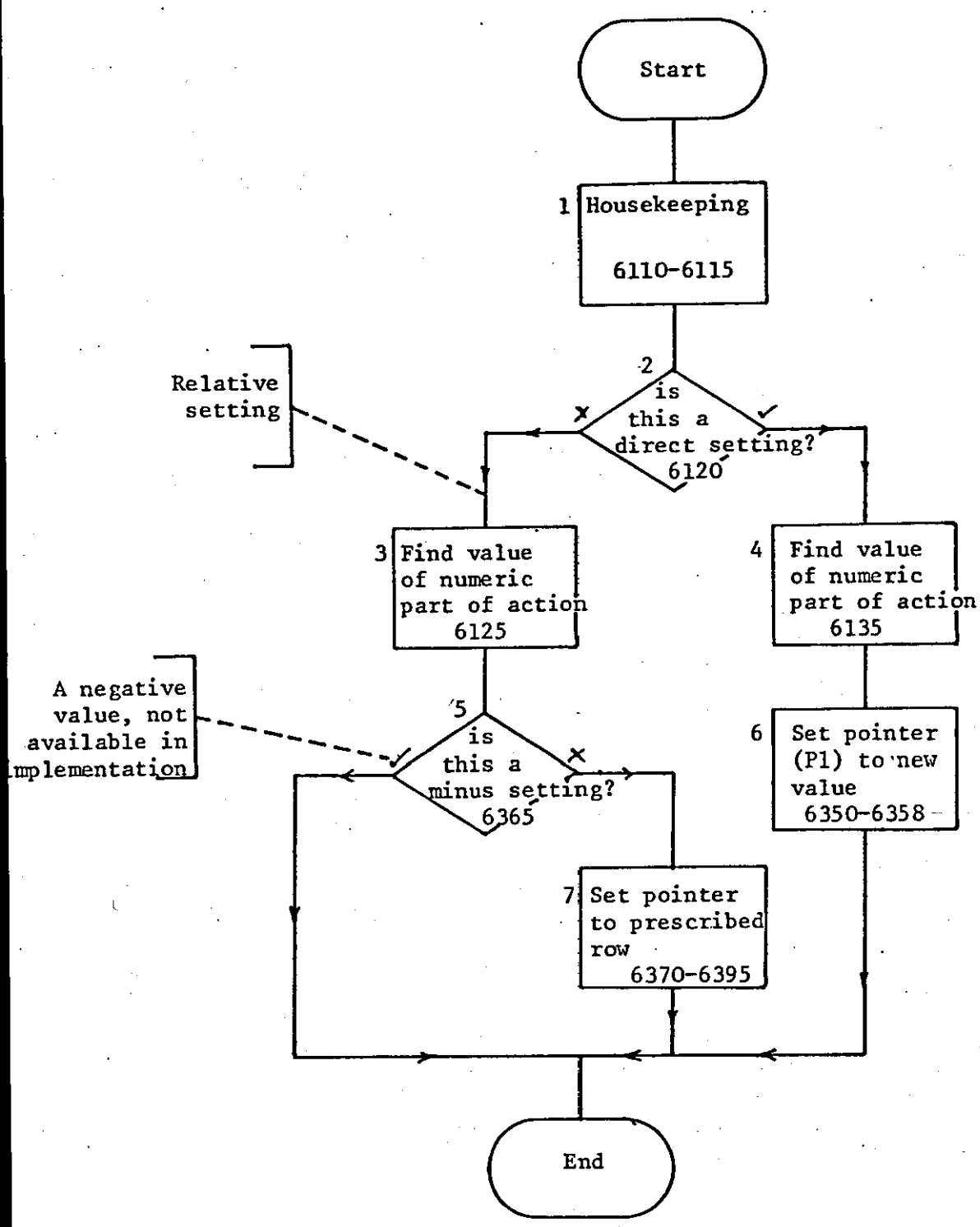

Generation 2 / SET PHRASE / Sheet 1 of 1 / MT43C1/19

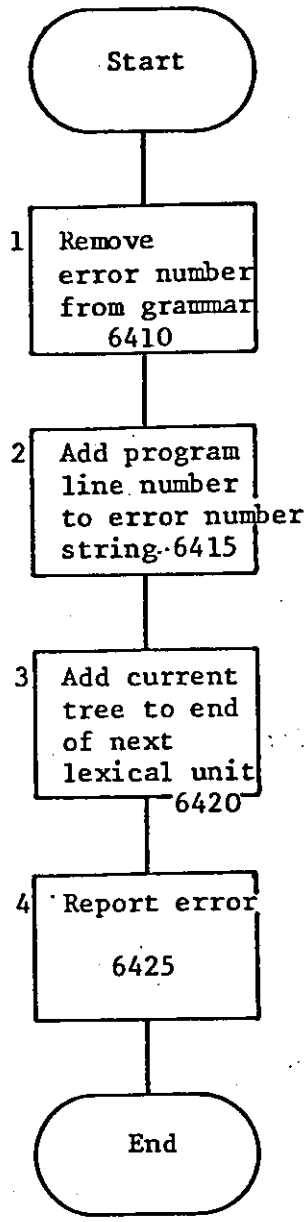

Generation 2 / ERROR / Sheet 1 of 1 / MT43C1/20

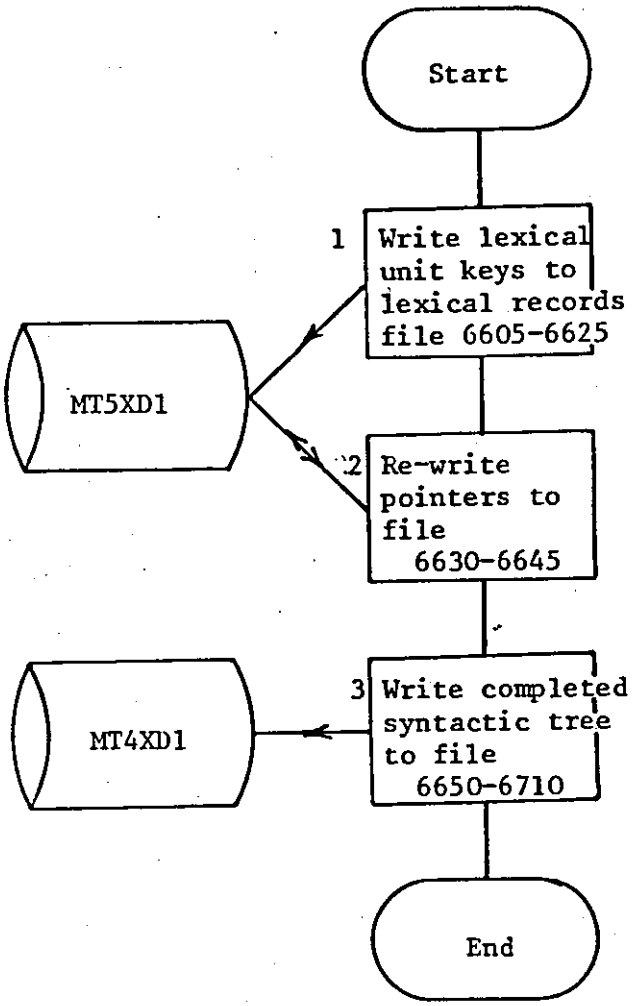

Generation 2 / WRITE TREES / Sheet 1 of 1 / MT43C1/21

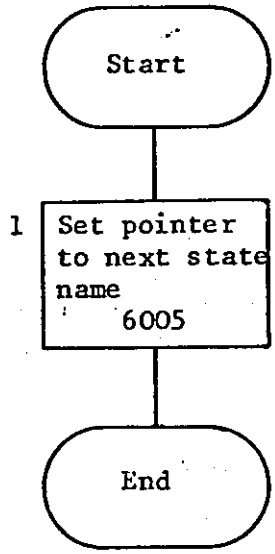
Start
1
Set pointer to next state name
6005
End

This routine has access to an array of syntactic units produced by a previous "TREE" condition, and loads its results into a results string.

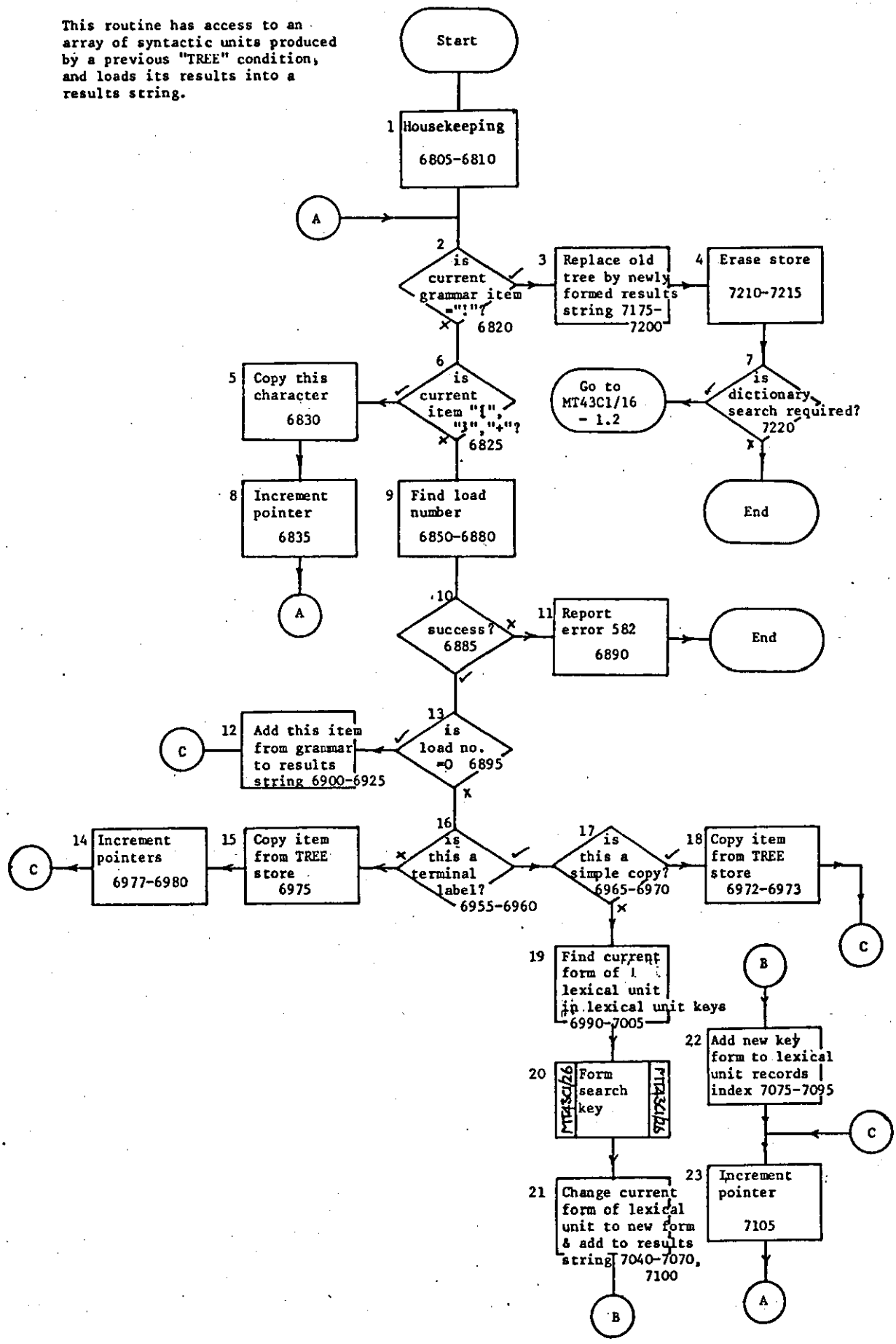

Generation 2 / SUB TREE / Sheet 1 of 1 / MT43C1/25

This routine always has the search key to be formed in a string X2£, drawn from the grammar

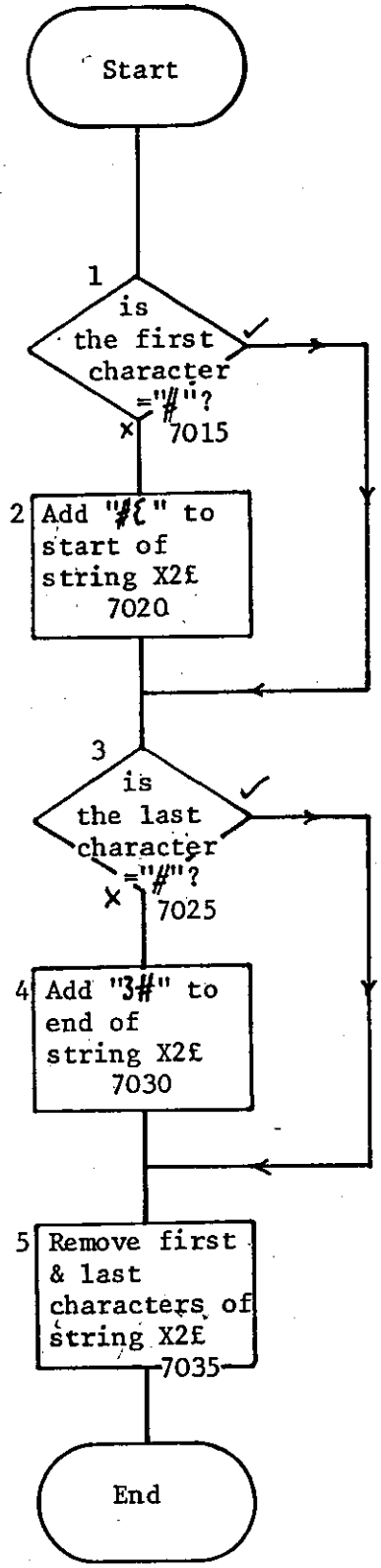

Generation 2 / form search key / Sheet 1 of 1 / MT43C1/26

APPENDIX P

PROGRAM MT45C1 (CREATION OF TL STRINGS)

Program listing 378

Flowcharts 389

Creation of target language strings - MT45C1

```
1 REM Create TL PRECIS strings - PJH - DLIS - LUT
2 PRINT FSP
5 ON ERROR GOTO 9890
10 DIM C$(10),K$(10),D$(50),R$(30)
11 DIM S$(5),Y$(3),L$(50)
60 FILE#2:"MT5XD1",2771 'TL lexical units
99
100 'get string number
105 FILE#1:"MT1XD1",2771 'SL data
110 READ#1:X$
115 C$(0)=SUB$(X$,5,2)
149
150 'open files
155 FILE#1:"MT4XD1",2771 'TL text
160 FILE#2:"MT5XD1",2771 'TL lexical units
165 FILE#3:"WORK",2771 'TL strings
199
200 'read manipulation coding
205 RESET#1:1
210 FOR X=1 TO 7
215  READ#1:C$(X)
220 NEXT X
222 GOSUB 225\ GOTO 250
225 C$(8)=C$(9)=""
227 FOR X=8 TO 10 'write pointers
230  FOR X1=1 TO LEN(C$(2))
235   C$(X)=C$(X)&PAK$(0,1)
240  NEXT X1
245 NEXT X
247 RETURN
250 C$(0)=C$(0)&ENC$(8,2)&PAK$(1,1)
299
300 'load TL data
302 GOSUB 225
303 MAT D$=NUL$
305 X1=DEC(SUB$(C$(0),3,2))
310 RESET#1:X1
315 READ#1:D$(0)
316 D$(0)=SUB$(D$(0),1,2)&ENC$(LOC(1)-1,2)
320 X=1 'pointer to matrix
325 X1=X1+1 'pointer to file
330 READ#1:X$
335 D$(X)=D$(X)&X$
340 IF LEN(D$(X))<=2 THEN 355 'a control record
342 IF LEN(D$(X))=3 THEN 400 'a control record
345 IF DEC(SUB$(D$(X),1,2))+2>LEN(D$(X)) THEN 325 'more in this record
350 D$(X)=SEG$(D$(X),3,LEN(D$(X)))
355 X=X+1
360 IF LOC(1)=LOF(1) THEN 365
362 IF X1<>DEC(SUB$(D$(0),1,2)) THEN 325 'more to retrieve
365 GOTO 500
400 'is this a date
405 IF SUB$(D$(X),1,1)<>"d" THEN 355
410 FOR X=X+1 TO X+2
420  READ#1:D$(X)
```

Creation of target language strings - MT45C1

```
425 NEXT X
430 X1=X1+2
435 GOTO 360
499
500 'process data
502 C$(0)=RPL$(C$(0),ENC$(LOC(1),2),3)
505 'housekeeping
550 'load text into processing matrix
555 GOSUB 2000
560 GOSUB 6000
565 GOTO 7000
2000 'load text into processing matrix R$()
2003 MAT R$=NUL$\R$(0)=""
2005 'set pointers to matrix
2010 X=X1=1
2015 IF SUB$(C$(7),X,1)=SUB$(C$(0),5,1) THEN 2025
2020 IF SUB$(C$(7),X,1)<>PAK$(0,1) THEN 2050
2025 IF OCC("0123456789vw",SUB$(C$(1),X,1))>0 THEN 2050 'no no.
2026 '            differences or $v/$w
2030 IF SUB$(C$(5),X,1)="0" THEN 2050 'no LO terms
2035 C$(8)=RPL$(C$(8),PAK$(X1,1),X) 'downward
2040 C$(9)=RPL$(C$(9),PAK$(X1+1,1),X) 'upward
2045 X1=X1+2
2050 X=X+1
2055 IF X<=LEN(C$(2)) THEN 2015
2060 R$(0)=ENC$(X1-1,2) 'total no. of records
2065 GOSUB 4000 'mark subs, BI & BS
2099
2100 'process text
2105 'downward
2110 C$(0)=SUB$(C$(0),1,5)&ENC$(1,2)
2115 GOSUB 2200 'concatenate X$
2120 X=8 'row of pointers
2125 GOSUB 3000 'put text into R$()
2149
2150 'upward
2155 GOSUB 2200 'concatenate X$
2160 X=9 'row of pointers
2165 GOSUB 3000 'put text into R$()
2170 GOTO 2400
2199
2200 'concatenate X$ routine
2205 X=DEC(SUB$(C$(0),6,2))+1
2210 X$="" 'holds concatenated text
2215 IF X>DEC(SUB$(D$(0),1,2))-DEC(SUB$(D$(0),3,2)) THEN 2255
2217 IF LEN(D$(X))=3 THEN 2255 'end
2220 X1=1
2222 X2=0
2225 X$=X$&D$(X+X1)
2227 X2=X2+(INT((LEN(D$(X+X1))+2)/174))
2230 X1=X1+1
2235 IF X1+X2<=DEC(SUB$(D$(X),1,2)) THEN 2225
2240 X$=X$&"|#|"
2245 X=X+X1
2250 GOTO 2215
```

Creation of target language strings - MT45C1

```
2255 C$(0)=SUB$(C$(0),1,5)&ENC$(X,2)
2260 RETURN
2299
2400 '$d, $o & $n
2405 X1$="dno"
2410 FOR X=1 TO LEN(X1$)
2415  X2=DEC(SUB$(C$(0),6,2)) 'where ops start
2420  X1=0 'start of codes
2425  IF POS(X1$,SUB$(D$(X2),1,1),1)=0 THEN 2480 'done
2430  IF SUB$(X1$,X,1)<>SUB$(D$(X2),1,1) THEN 2470
2435  X1=POS(C$(1),SUB$(X1$,X,1),X1+1)
2440  IF UPK(SUB$(C$(8),X1,1))=0 THEN 2435
2445  X3=UPK(SUB$(C$(8),X1,1))
2450  IF LEN(R$(X3))>0 THEN 2460
2455  R$(X3)=D$(X2+2)
2460  IF LEN(R$(X3+1))>0 THEN 2470
2465  R$(X3+1)=D$(X2+2)
2470  X2=X2+3
2475  GOTO 2425
2480 NEXT X
2485 C$(0)=RPL$(C$(0),ENC$(X2,2),6)
2499
2500 RETURN
3000 'fill matrix
3005 X3=0 'pointer to last row filled
3010 X1=LEN(X$)-4 'pointer to X$
3015 X2=POS("no  nn  np  ve  ",SUB$(X$,X1,4),1)
3020 IF X2=0 THEN 3060 'not a marked item
3025 IF MOD(X2+3,4)<>0 THEN 3060 'not a marked item
3030 X2=UPK(SUB$(X$,X1+7,1))
3035 IF X2=0 THEN 3060 'no loc given for this
3040 X3=X2=UPK(SUB$(C$(X),X2,1)) 'find store loc in R$()
3045 R$(X2)=SEG$(X$,X1,LEN(X$)) 'add to store
3050 X$=SUB$(X$,1,X1-1)
3055 GOTO 3010
3059
3060 'has end been reached
3065 X1=X1-1
3070 IF X1>0 THEN 3015
3099
3100 'all done - dump any extra
3105 'condition 1 - just "NP  ####+{" left
3110 IF LEN(X$)<>10 THEN 3150
3115 IF SUB$(X$,1,4)<>"NP  " THEN 3150
3120 IF SUB$(X$,9,2)<>"+{" THEN 3150
3125 GOTO 3250 'end
3149
3150 'condition 2 "PP  ####+{pr  ####+NP  ####+{" left
3155 ' IF SUB$(X$,1,4)<>"PP  " THEN 3200
3160 IF OCC(X$,"NP  ")<>1 THEN 3200
3165 IF SUB$(X$,LEN(X$)-1,2)="}+" THEN 3175
3170 IF SUB$(X$,LEN(X$)-1,2)<>"+{" THEN 3200
3175 R$(X3)=X$&R$(X3)
3180 GOTO 3250 'end
3199
```

Creation of target language strings - MT45C1

```
3200 'condition 3 - dump anything
3205 X1=X-7
3210 IF LEN(R$(X1))>0 THEN 3215
3212 IF SUB$(C$(1),POS(C$(X),PAK$(X1,1),1),1)<>"d" THEN 3230
3215 X1=X1+2
3220 IF DEC(SUB$(R$(0),1,2))>=X1 THEN 3210
3225 PRINT "ERROR IN DUMPING AT";CUL
3227 X=FNZ("",CUL,591)
3230 R$(X1)=X$
3249
3250 'ending
3255 X$=""
3260 RETURN
3299
3300 'leave lots of room for
3598 '  extra conditions
3599
4000 'mark subs, blank inserts & blank subs
4005 FOR X=1 TO LEN(C$(2))
4010  IF SUB$(C$(4),X,1)="0" THEN 4020
4012  IF UPK(SUB$(C$(8),X,1))=0 THEN 4020
4015  IF OCC("12",SUB$(C$(5),X,1))>0 THEN 4030
4020 NEXT X
4025 GOTO 4300
4029
4030 'mark other record of pair for sub
4035 X1=7+POS("21",SUB$(C$(5),X,1),1)
4040 X1=UPK(SUB$(C$(X1),X,1))
4045 R$(X1)="SUB"
4049
4050 'now mark knocked out records
4055 IF SUB$(C$(5),X,1)="1" THEN 4150 'to downward reading
4060 X1=X-1 'pointer to items knocked out
4065 X2=0 'counter of items knocked out
4070 IF OCC("zyx",SUB$(C$(1),X1,1))=0 THEN 4085
4075 X2=X2+1
4080 IF X2=VAL(SUB$(C$(4),X,1)) THEN 4095 'all found
4085 X1=X1-1
4090 IF X1>0 THEN 4070
4095 'X1= start of knocked out terms
4100 X2=X-1 'end of knocked out terms
4105 X3=9 'row of pointers
4110 GOTO 4250 'to marking routine
4149
4150 'downward reading subs
4160 X1=X+1 'pointer to items knocked out
4165 X2=0 'counter of items knocked out
4170 IF OCC("zyx",SUB$(C$(1),X1,1))=0 THEN 4185
4175 X2=X2+1
4180 IF X2=VAL(SUB$(C$(4),X,1)) THEN 4195 'all found
4185 X1=X1+1
4190 IF X1>LEN(C$(2)) THEN 4170
4195 X2=X1 'end of knocked out terms
4200 X1=X+1 'start of knocked out terms
4205 X3=8 'row of pointers
```

Creation of target language strings - MT45C1

```
4249
4250 'routine for marking subs
4255 FOR X1=X1 TO X2
4260  X4=UPK(SUB$(C$(X3),X1,1))
4265  IF X4=0 THEN 4275
4270  R$(X4)="SUB"
4275 NEXT X1
4280 GOTO 4020
4299
4300 'routine to identify BS & BI
4305 FILE#1:"MT1XD1",2771
4307 RESET#1:2
4310 READ#1:X$
4315 FOR X=8 TO 7+LEN(X$)
4320  RESET#1:X
4325  READ#1:X$
4330  IF LEN(X$)>0 THEN 4370
4335  X1=X-7
4340  X2=UPK(SUB$(C$(8),X1,1))
4345  IF X2=0 THEN 4355
4350  R$(X2)="BLK"
4355  X2=UPK(SUB$(C$(9),X1,1))
4360  IF X2=0 THEN 4370
4365  R$(X2)="BLK"
4370 NEXT X
4375 FILE#1:"MT4XD1",2771
4380 RETURN
4399
6000 'trim data
6005 X=1 'pointer to R$() - remove phrase markers
6007  X1=POS(C$(8),PAK$(X,1),1)
6008  IF X1>0 THEN 6010
6009  X1=POS(C$(9),PAK$(X,1),1)
6010  IF SUB$(C$(1),X1,1)="d" THEN 6220
6012  X$="ad  ab  de  co  ve  nn  np  no  pr  "
6015  X1=1 'pointer to columns of R$()
6020  IF SUB$(R$(X),X1,1)<"A" THEN 6050
6022  IF SUB$(R$(X),X1,1)>"Z" THEN 6050
6025  IF SUB$(R$(X),1,3)="SUB" THEN 6220
6030  IF SUB$(R$(X),1,3)="BLK" THEN 6220
6040  R$(X)=SUB$(R$(X),1,X1-1)&SEG$(R$(X),X1+10,LEN(R$(X)))
6045  GOTO 6200 'test for end
6049
6050  'a unit
6055  X2=POS(X$,SUB$(R$(X),X1,4),1)
6060  IF X2=0 THEN 6100
6065  IF MOD(X2+3,4)<>0 THEN 6100
6070  R$(X)=SUB$(R$(X),1,X1+3)&SEG$(R$(X),X1+8,LEN(R$(X)))
6075  X1=POS(R$(X),"}",X1+4)+1
6080  GOTO 6200 'text for end
6099
6100 'test for block markers
6105  IF SUB$(R$(X),X1,3)<>"|#|" THEN 6150
6110  X1=X1+3
6115  GOTO 6200 'test for end
```

Creation of target language strings - MT45C1

```
6149
6150 'cut out anything else
6155  IF OCC("{}+",SUB$(R$(X),X1,1))>0 THEN 6170
6160  X1=X1+1
6165  GOTO 6200
6170  R$(X)=SUB$(R$(X),1,X1-1)&SEG$(R$(X),X1+1,LEN(R$(X)))
6199
6200 'Test for end
6205  IF X1<=LEN(R$(X)) THEN 6020 'more in this row
6210  IF SUB$(R$(X),LEN(R$(X))-2,3)<>"|#|" THEN 6220
6215  R$(X)=SUB$(R$(X),1,LEN(R$(X))-3)
6220  IF X=DEC(SUB$(R$(0),1,2)) THEN 6235 'no more rows
6225  X=X+1
6230  GOTO 6007
6235  X$=""
6299
6400 'take out any unmarked blocks
6405 X2=(-2)
6410 FOR X=1 TO DEC(SUB$(R$(0),1,2)) STEP 2
6415  GOSUB 6500
6420 NEXT X
6424
6425 X2=2
6430 FOR X=DEC(SUB$(R$(0),1,2)) TO 2 STEP-2
6435  GOSUB 6500
6445 NEXT X
6450 GOTO 6600
6499
6500 'SUBROUTINE - find where extra record is parked
6505  IF LEN(R$(X))>0 THEN 6560
6510  X3=X2
6515  IF SUB$(R$(X+X3),1,3)="BLK" THEN 6525
6520  IF SUB$(R$(X+X3),1,3)<>"SUB" THEN 6545
6525  X3=X3+X2
6530  IF X+X3<1 THEN 6560 'end
6535  IF X+X3>DEC(SUB$(R$(0),1,2)) THEN 6560 'end
6540  GOTO 6515
6545  IF OCC(R$(X+X3),"|#|")=0 THEN 6560
6550  R$(X)=SEG$(R$(X+X3),POS(R$(X+X3),"|#|",1)+3,LEN(R$(X+X3)))
6555  R$(X+X3)=SUB$(R$(X+X3),1,POS(R$(X+X3),"|#|",1)-1)
6560 RETURN
6599
6600 'remove occurrences of "$01 for" at end of items
6605 FOR X=1 TO DEC(SUB$(R$(0),1,2)) STEP 2
6607  X1=0
6610  IF OCC(R$(X),"|#|")=0 THEN 6635
6615  ' IF OCC(SEG$(R$(X),POS(R$(X),"|#|",1),LEN(R$(X))),"}")>1
          THEN 6635

  6617  IF SUB$(R$(X),POS(R$(X),"|#|",1)+3,5)="ab  {" THEN 6621
6620  IF SUB$(R$(X),POS(R$(X),"|#|",1)+3,5)<>"pr  {" THEN 6635
6621  X1=X1+2
6622  IF OCC("don",SUB$(C$(1),POS(C$(8),PAK$(X+X1,1),1),1))>0
          THEN 6621
6625  R$(X+X1)=SEG$(R$(X),POS(R$(X),"|#|",1)+3,LEN(R$(X)))&R$(X+X1)
6630  R$(X)=SUB$(R$(X),1,POS(R$(X),"|#|",1)-1)
```

Creation of target language strings - MT45C1

```
6635 NEXT X
6649
6655 FOR X=DEC(SUB$(R$(0),1,2)) TO 1 STEP-2
6657  IF OCC(R$(X),"|#|")=0 THEN 6675
6658  X1=0
6659  IF SUB$(R$(X),POS(R$(X),"|#|",1)+3,5)="ab  {" THEN 6661
6660  IF SUB$(R$(X),POS(R$(X),"|#|",1)+3,5)<>"pr  {" THEN 6675
6661  X1=X1+2
6662  IF OCC("don",SUB$(C$(1),POS(C$(9),PAK$(X-X1,1),1),1))>0
        THEN 6661
6665  R$(X-X1)=SEG$(R$(X),POS(R$(X),"|#|",1)+3,LEN(R$(X)))&R$(X-X1)
6670  R$(X)=SUB$(R$(X),1,POS(R$(X),"|#|",1)-1)
6675 NEXT X
6680 RETURN
6699
7000 'create the strings
7005 IF UPK(SUB$(C$(0),5,1))<>1 THEN 7050
7010 IF X<>1 THEN 7050
7015 MAT S$=NUL$
7020 MAT Y$=NUL$
7025 S$(0)=""
7049
7050 'load dictionary
7299
7300 'now go through each line
7305 X=1 'pointer to data
7310 X1=UPK(SUB$(C$(0),5,1)) 'theme no.
7320 X2=0 'substitute item pointer
7325 IF UPK(SUB$(C$(8),X,1))=0 THEN 8200 'ignore
7330 X3=UPK(SUB$(C$(8),X,1))
7335 IF POS(R$(X3),"|#|",1)=0 THEN 7400
7340 X$=SEG$(R$(X3),POS(R$(X3),"|#|",1)+3,LEN(R$(X3)))
7345 R$(X3)=SUB$(R$(X3),1,POS(R$(X3),"|#|",1)-1)
7350 X1$=SEG$(R$(X3+1),POS(R$(X3+1),"|#|",1)+3,LEN(R$(X3+1)))
7355 R$(X3+1)=SUB$(R$(X3+1),1,POS(R$(X3+1),"|#|",1)-1)
7399
7400 'is this a blank
7405 IF SUB$(R$(X3),1,3)<>"BLK" THEN 7450
7415 GOTO 8015 'add to store
7449
7450 'is this a d
7455 IF SUB$(C$(1),X,1)<>"d" THEN 7500 'deal with $d separately
7460 MAT Y$=NUL$
7462 IF OCC("SUB!BLK",R$(X3))>0 THEN 7465
7463 X3=X3+1
7465 Y$(1)="$d"&R$(X3)
7470 GOTO 8100
7499
7500 'not a $d - so treat as ordinary
7505 IF LEN(R$(X3+1))=0 THEN 7520
7510 IF LEN(R$(X3))<>LEN(R$(X3+1)) THEN 7600
7515 IF R$(X3)<>R$(X3+1) THEN 7600
7520 X6=X3
7525 GOSUB 9000 'find any $v/$w
7530 IF LEN(X2$)>0 THEN 7545
```

Creation of target language strings - MT45C1

```
7535 Y$(1)=R$(X3)
7540 GOTO 7555
7545 Y$(1)=SUB$(R$(X3),1,X4-5)
7550 Y$(2)=Y$(3)=X2$
7555 GOTO 8000 'get rid of category labels
7599
7600 'reading is not the same
7605 IF SUB$(R$(X3+1),1,3)="SUB" THEN 7650
7607 IF SUB$(R$(X3),1,3)<>"SUB" THEN 7700 '$v/$w present
7610 X6=X3
7615 GOSUB 9000 'find any $v/$w
7620 IF LEN(X2$)=0 THEN 7640 'none
7625 Y$(1)=SUB$(R$(X6),1,X4-5)
7630 Y$(2)=X2$
7635 GOTO 7645
7640 Y$(1)=R$(X3+1)
7645 GOTO 8000 'get rid of cat labels
7650 'downward reading subs
7660 GOSUB 9000 'find any $v/$w
7665 IF LEN(X2$)=0 THEN 7685 'none
7670 Y$(1)=SUB$(R$(X6),1,X4-5)
7675 Y$(3)=X2$
7680 GOTO 7690
7685 Y$(1)=R$(X3)
7690 GOTO 8000 'get rid of cat labels
7699
7700 '$v/$w present
7702 GOSUB 7705\ GOTO 8000 'get rid of cat labels
7705 X6=X3
7706 GOSUB 9000
7707 IF LEN(X2$)>0 THEN 7775
7709 X4=X5=X6=0
7710 X4=POS(R$(X3),"}",X4+1)
7715 IF X4=0 THEN 7745 'not equal
7720 IF X4<>POS(R$(X3+1),"}",X5+1) THEN 7745 'not equal
7725 IF SUB$(R$(X3),1,X4)<>SUB$(R$(X3+1),1,X4) THEN 7745
7730 X6=X5 'penultimate unit
7735 X5=X4 'ultimate unit
7740 GOTO 7710
7745 IF SUB$(R$(X3),X4+1,4)<>"pr  " THEN 7755
7747 IF X5=0 THEN 7755
7750 X5=X4
7755 Y$(1)=SUB$(R$(X3),1,X5)
7760 Y$(2)=SEG$(R$(X3),X5+1,LEN(R$(X3)))
7765 Y$(3)=SEG$(R$(X3+1),X5+1,LEN(R$(X3+1)))
7770 RETURN
7775 IF LEN(R$(X3))-X4=LEN(R$(X3+1))-X4 THEN 7778
7776 X5=0\ GOTO 7755
7778 Y$(1)=SUB$(R$(X3),1,X4-5)
7780 Y$(2)=SEG$(R$(X3),X4-4,LEN(R$(X3)))
7785 Y$(3)=SEG$(R$(X3+1),X4-4,LEN(R$(X3+1)))
7790 RETURN
7799
8000 'strip off category labels
8005 IF LEN(Y$(1))=0 THEN 8015
```

Creation of target language strings - MT45C1

```
8007 X4=FNB("","",1,0,0,0)
8010 Y$(1)=FNA$(1,0,0)
8015 IF OCC("zyx",SUB$(C$(1),X,1))=0 THEN 8050
8020 X2$="$"
8025 FOR X4=1 TO 5
8030  X2$=X2$&SUB$(C$(X4),X,1)
8035 NEXT X4
8040 Y$(1)=X2$&Y$(1)
8045 GOTO 8075
8050 Y$(1)="$"&SUB$(C$(1),X,1)&Y$(1)
8075 'connectives
8080 IF LEN(Y$(2))=0 THEN 8090
8082 X4=FNB("","",1,0,0,0)
8083 Y$(2)=FNA$(2,0,0)
8085 Y$(2)="$v"&Y$(2)
8090 IF LEN(Y$(3))=0 THEN 8100
8092 X4=FNB("","",1,0,0,0)
8093 Y$(3)=FNA$(3,0,0)
8095 Y$(3)="$w"&Y$(3)
8099
8100 'now add to string matrix
8105 IF OCC(C$(7),PAK$(1,1))>0 THEN 8120
8110 X3=1
8115 GOTO 8150
8120 IF X1>1 THEN 8140 'lst theme already present
8125 IF OCC(SEG$(C$(7),X,LEN(C$(7))),PAK$(1,1))>0 THEN 8110
8130 X3=0
8135 GOTO 8150
8140 X3=X1
8149
8150 'add data
8155 S$(X3)=S$(X3)&Y$(1)&Y$(2)&Y$(3)
8160 MAT Y$=NUL$
8199
8200 'loop
8205 X=X+1
8210 IF X<=LEN(C$(2)) THEN 7310
8215 IF DEC(SUB$(C$(0),3,2))>=LOF(1) THEN 8225
8217 C$(0)=RPL$(C$(0),PAK$(UPK(SUB$(C$(0),5,1))+1,1),5)
8220 GOTO 300 'read next theme
8225 X=1
8230 X$=""
8235 X$=X$&S$(X)
8240 X=X+1
8245 IF LEN(S$(X))>0 THEN 8235
8250 X$=X$&S$(0)&"#"&STR$(DEC(SUB$(C$(0),1,2)))
8253 PRINT X$
8255 X$=PAK$(LEN(X$),2)&X$
8260 IF LOF(3)>0 THEN 8270
8265 MARGIN#3:174
8270 RESET#3:LOF(3)
8275 WRITE#3:SUB$(X$,1,MRG(3))
8280 X$=SEG$(X$,MRG(3)+1,LEN(X$))
8285 IF LEN(X$)>0 THEN 8275
8290 CHAIN "MT11C1,2771"
```

Creation of target language strings - MT45C1

```
8299
9000 'SUBROUTINE 'find pr/de/co in identical data
9003 IF LEN(R$(X6))>=LEN(R$(X6+1)) THEN 9007
9005 X6=X6+1
9007 X4=LEN(R$(X6))
9010 X5=0
9015 IF SUB$(R$(X6),X4,1)="{" THEN 9035
9020 X4=X4-1
9025 IF X4>0 THEN 9015
9030 GOTO 9115
9035 X5=X5+1 'counter
9040 ON X5 GOTO 9045,9065
9045 IF SUB$(R$(X6),X4-4,4)="co  " THEN 9105 'end
9050 IF SUB$(R$(X6),X4-4,4)="pr  " THEN 9105 'end
9055 IF SUB$(R$(X6),X4-4,4)<>"de  " THEN 9115 'end
9060 GOTO 9020
9065 IF SUB$(R$(X6),X4-4,4)<>"pr  " THEN 9115
9100 'ending
9105 X2$=SEG$(R$(X6),X4-4,LEN(R$(X6)))
9110 RETURN
9115 X2$=""
9120 RETURN
9199
9300 DEF FNA$(X,X1,X2) 'strip off labels
9305  Y$(X)=SEG$(Y$(X),6,LEN(Y$(X)))
9310  IF OCC(Y$(X),"}")=1 THEN 9335
9315  X1=POS(Y$(X),"}",1)
9320  X2=POS(Y$(X),"{",X1)
9325  Y$(X)=SUB$(Y$(X),1,X1-1)&" "&SEG$(Y$(X),X2+1,LEN(Y$(X)))
9330  GOTO 9310
9335  Y$(X)=SUB$(Y$(X),1,LEN(Y$(X))-1)
9340  X1=POS(Y$(X),"' ",1)
9345  IF X1=0 THEN 9360
9350  Y$(X)=SUB$(Y$(X),1,X1)&SEG$(Y$(X),X1+2,LEN(Y$(X)))
9355  GOTO 9340
9360  IF SUB$(Y$(X),LEN(Y$(X)),1)<>"}" THEN 9375
9365  Y$(X)=SUB$(Y$(X),1,LEN(Y$(X))-1)
9370  GOTO 9360
9375  X1=POS(Y$(X),"%",1)
9380  IF X1=0 THEN 9395
9385  Y$(X)=RPL$(Y$(X)," ",X1)
9390  GOTO 9375
9395  LET FNA$=Y$(X)
9397 FNEND
9399
9450 DEF FNB(X$,X1$,X,X1,X2,X3) 'gets out put forms of LUs
9455  X1=0
9460  X1=POS(Y$(X),"{",X1+1)
9465  IF X1=0 THEN 9690 'done
9470  X2=POS(Y$(X),"}",X1+1)
9475  IF OCC("np  nn  ",SUB$(Y$(X),X1-4,4))=0 THEN 9485
9480  GOSUB 9500
9485  X1=X2
9490  GOTO 9460
9499
```

Creation of target language strings - MT45C1

```
9500  'SUBROUTINE load dictionary & get LUs
9505  IF LEN(L$(0))>0 THEN 9600 'dictionary index already loaded
9510  RESET#2:0 'read dictionary index
9515  READ#2:X$
9520  L$(0)="0"
9525  X$=SUB$(X$,1,LEN(X$)-2)
9530  RESET#2:DEC(SUB$(X$,1,2))
9535  READ#2:X1$
9540  FOR X3=1 TO VAL(X1$)
9545   READ#2:X1$
9550   L$(VAL(L$(0))+1)=X1$
9555   L$(0)=STR$(VAL(L$(0))+1)
9560  NEXT X3
9565  X$=SEG$(X$,3,LEN(X$))
9570  IF LEN(X$)>0 THEN 9530
9599
9600  'search dictionary
9605  X3=1
9610  X$=SEG$(Y$(X),X1+1,X2-1)&"#"
9615  IF LEN(L$(X3))-4<LEN(X$) THEN 9625
9620  IF SUB$(L$(X3),5,LEN(X$))=X$ THEN 9650
9625  X3=X3+1
9630  IF X3<=VAL(L$(0)) THEN 9615
9635  GOTO 9687 'not found
9649
9650  'found
9655  X3=DEC(SUB$(L$(X3),LEN(L$(X3))-1,2))
9660  RESET#2:X3
9665  READ#2:X1$
9670  X3=POS(X1$,"#",1)
9675  IF SUB$(X1$,X3+1,1)="#" THEN 9687
9680  X$=SEG$(X1$,X3+1,POS(X1$,"#",X3+1)-1)
9685  Y$(X)=RPL$(Y$(X),X$,X1+1)
9687  RETURN
9690  LET FNB=0
9695 FNEND
9699
9890 X=FNZ("",ERL,ERR)
9900 DEF FNZ(X$,X,X1) 'errors
9903  PRINT CUL,ERL,ERR
9905  NO ERROR
9910  X$=ENC$(X,4)&ENC$(X1,2)&X$
9925  FILE#1:"ERROR",2771
9930  IF LOF(1)>0 THEN 9940
9935  MARGIN#1:44
9940  RESET#1:LOF(1)
9942  IF LEN(C$(0))>0 THEN 9945
9944  C$(0)=ENC$(0,2)
9945  WRITE#1:"MT45C1"&SUB$(C$(0),1,2)&SUB$(X$,1,MRG(1)-8)
9950  CHAIN "MT11C1,2771"
9955 FNEND
99999 END
```

* * * END OF PRINT * * *

FLOWCHARTS

	Page
Main routine - MT45C1/1	390
Create basic term - MT45C1/2	391

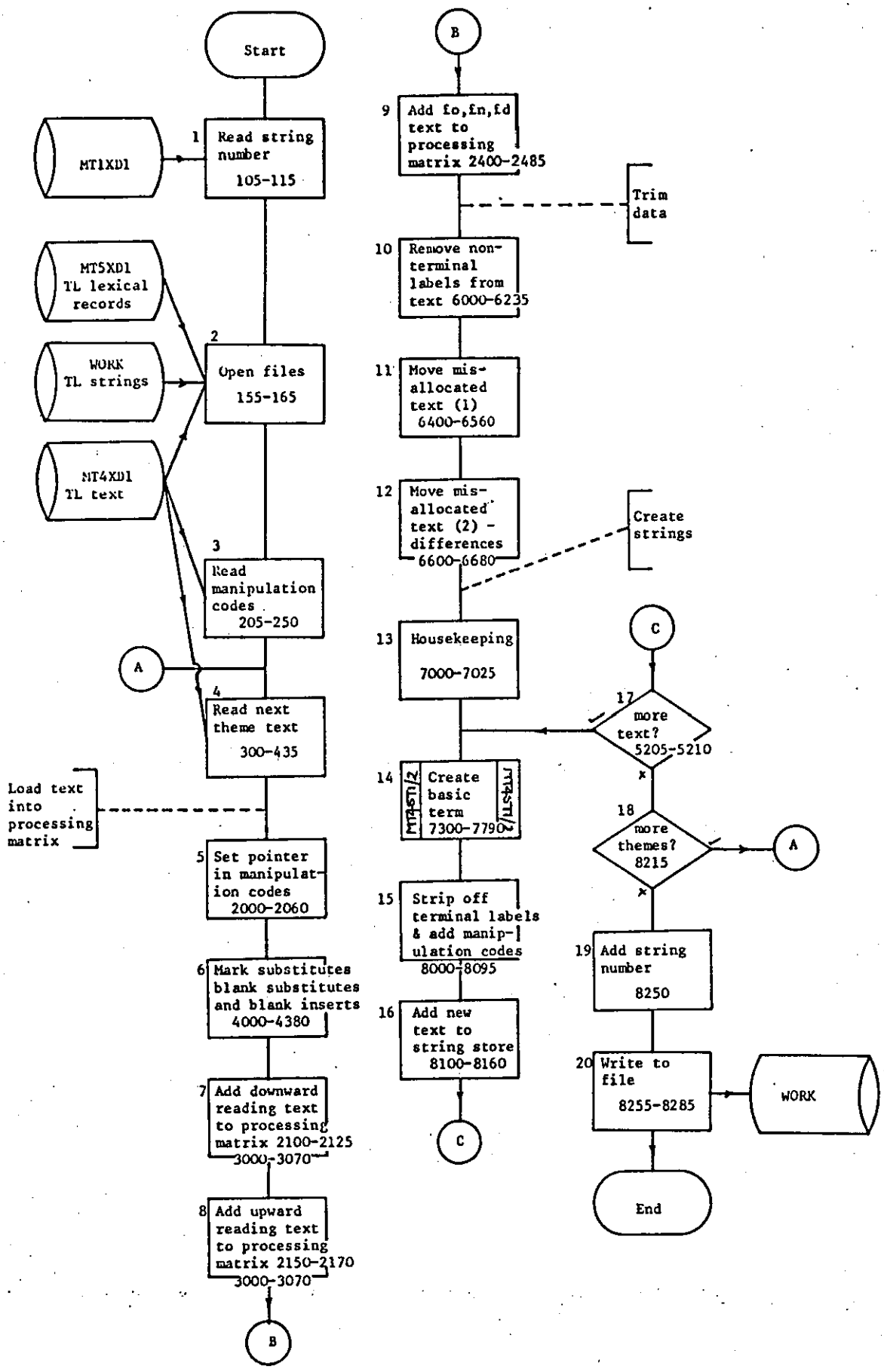

Creation of TL strings / main routine / Sheet 1 of 1 / MT45C1/1

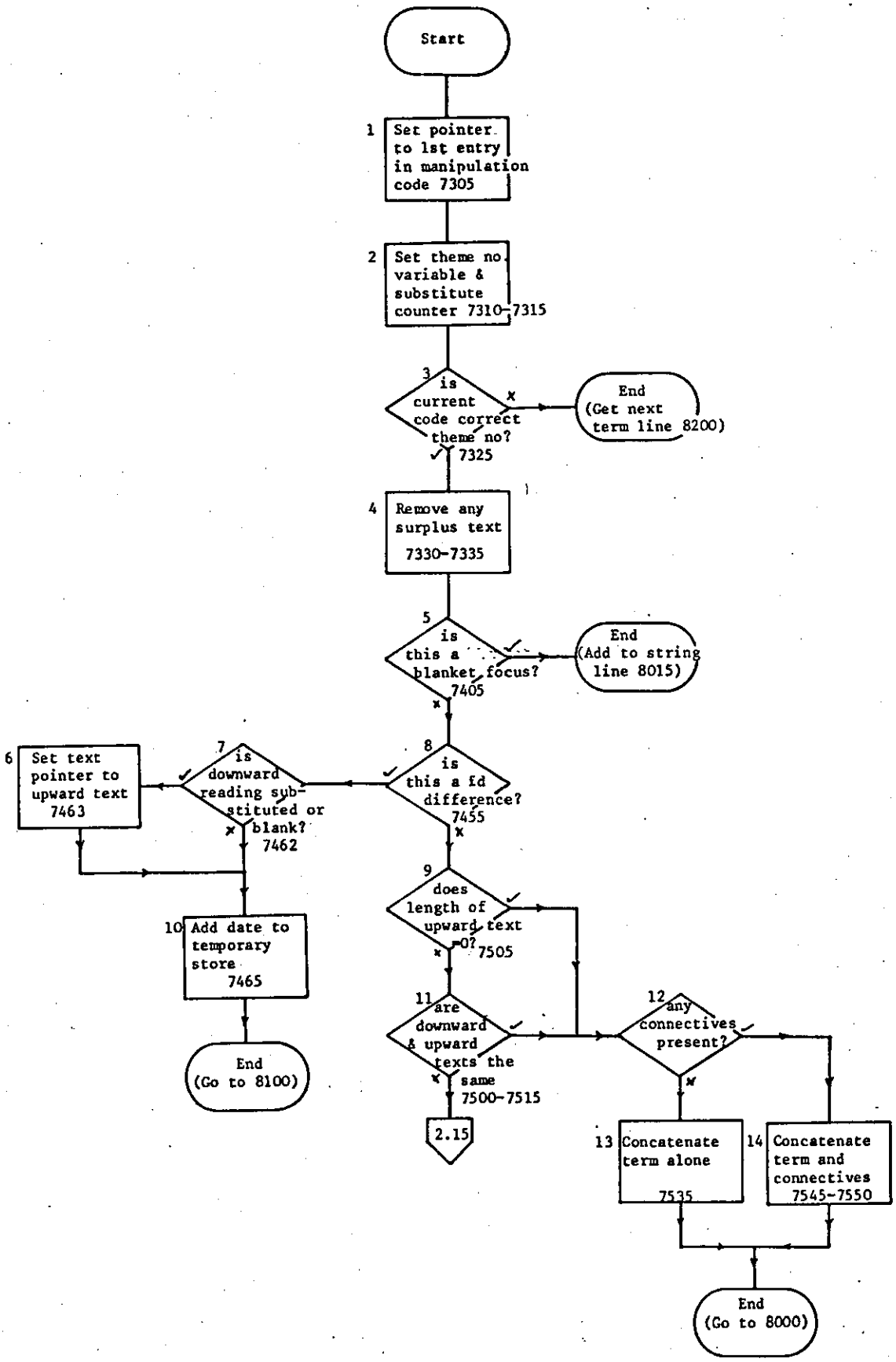

Creation of TL strings / create basic term / Sheet 1 of 2 / MT45C1/2

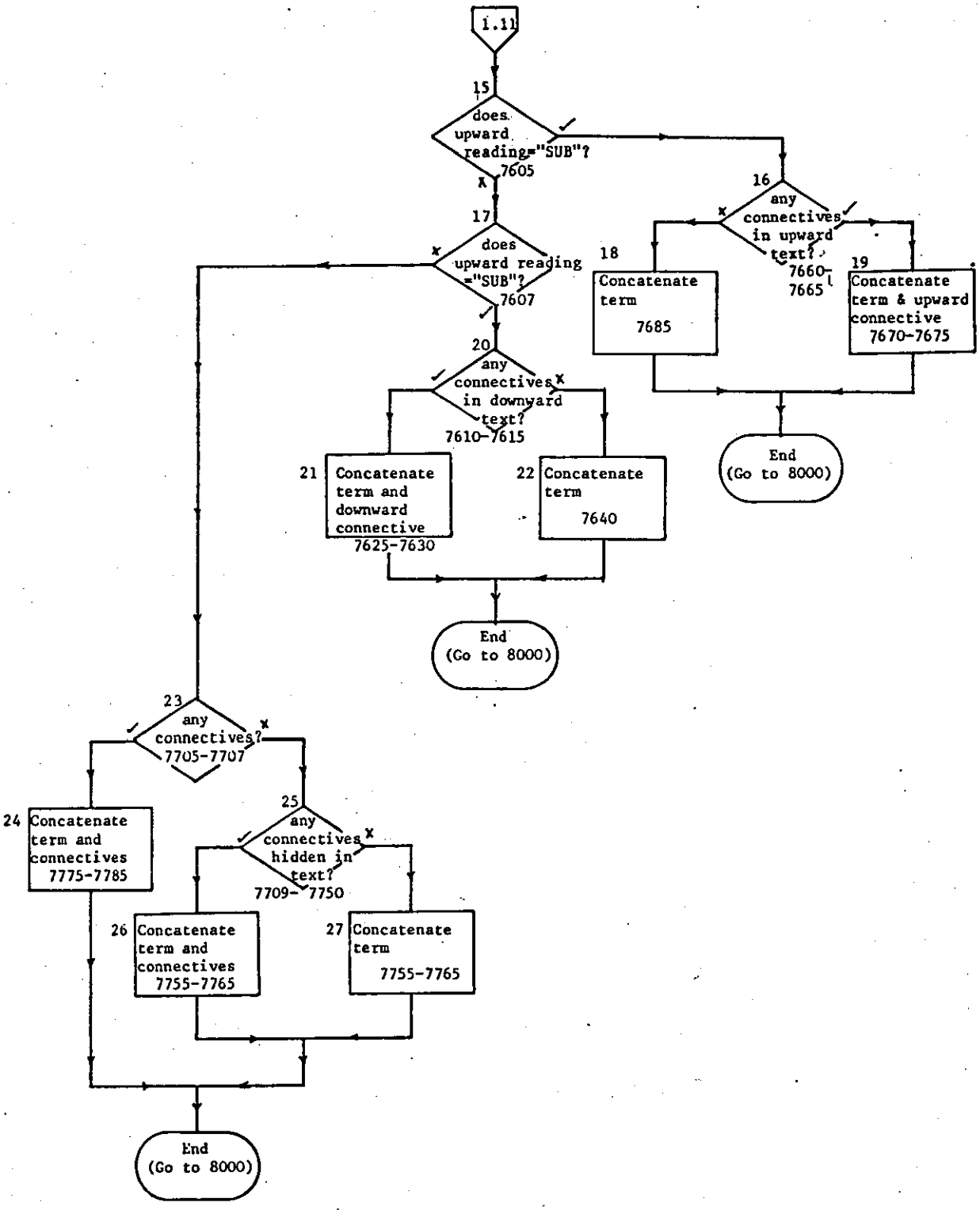

Creation of TL strings / create basic term / Sheet 2 of 2 / MT45C1/2

APPENDIX Q

ERROR MANUAL

Loughborough University of Technology

Department of Library and Information Studies

PRECIS English/French translation system
Error reports

User manual

P J Hancox

February 1983

CONTENTS

	Section
Introduction	
Use of the error reporting module	1
Error numbers 1-240	2
Error numbers 500-999	3
Error numbers 1001-1100	4

INTRODUCTION

The PRECIS English-French machine translation system was designed to run in the batch mode. Rather than halting the suite of programs when an error of some type occurs, the condition is collected in a file, for reporting at a later stage. There are two classes of error, being those related to the software being run (caught by the "ON ERROR" statement in Digico M28 Extended BASIC); and those related to errors or lapses in the lexicons and grammars of the translation system. The latter have been allocated error numbers in the range 500 to 999. The former have two ranges. The first (1-240) generally concerns the running of the programs, while the second (1001-1100) is the product of file handling operations. These messages may be examined using either a VDU, or a printer.

1 Use of the error reporting module

Program name: ERRORP,2771 (compiled)
ERRORS,2771 (source code)
File used: ERROR,2771 (relative record)

The program allows the user to choose the order of four elements in the report:

1 Program name
2 Record number
3 Line number
4 Error number

1.1 Program name in which the error was reported.

1.2 Record number: ie the sequence number of the PRECIS string being processed at the time of error.

1.3 Line number at which the error occured.

1.4 Error number applicable to the condition. For further details of individual numbers see sections 2, 3 and 4.

The user has to enter his choice, for there is no default value; neither can items be suppressed.

The reports are sorted according to the user's instructions (which may take a while if there are many errors) and the following request made:

Do you want the VDU (1) or printer (2)

Again there is no default value.

1.5 VDU option. This gives the heading, and up to nine reports at a time. The user must press "RETURN" to get another set. At the end of the run the user is given the option to scratch the error file (section 1.7).

1.6 Printer option. The user is asked to set the slave printer to the top of the form, pressing 'RETURN' when having done so. The program prints a running heading, and up to thirty entries per form. At the end of the run, the slave printer is reset, and control passed back to the controlling VDU which is set back to roll mode. The user is given the option of scratching the error file (section 1.7).

1.7 Scratching the error file. The user is asked:

Do you want to scratch the error file (Y or N)

The default value is "no". If the response is negative, the following message is printed:

OK - file hasn't been scratched

If the response is positive, the following message is printed:

The error file has been scratched

ERROR NUMBERS 1-240

Number	Meaning
27	Floating point input/output error
28	Floating point input/output error
29	Floating point input/output error
30	Floating point input/output
31	Division by zero or unable to fix
41	Channel negative or greater than 62
42	Channel not open
43	Wrong file type
44	Out of data in an array
45	Bad format string
46	Wrong data format
47	File not empty when setting a margin
48	Too many files opened
49	Margin too big
50	Invalid volume serial number
51	Pointer setting invalid
52	Number negative in a TAB statement
53	RPL$ statement not available in this version of BASIC
54	Trying to write string that is larger than file margin
56	Illegal control character
61	Subscript out of bounds
62	Illegal GOSUB/function nesting
63	Illegal GOSUB/function nesting
64	Illegal GOSUB/function nesting
65	Illegal GOSUB/function nesting
66	ON statement evaluated out of range
70	Number negative in GAP$ statement
71	Number negative in LIN$ statement
72	Number negative in CHR$ statement
73	Error in PAK$ or UPK statement
74	Invalid SLOT$ argument
75	Invalid task number in SLOT$ statement
76	Control string for SLOT$ statement is too long
77	Desired SLOT is unavailable
78	String length is invalid for an ENC$ statement
79	Error in use of ENC$ statement
80	String is greater than 4095 characters long
81	Result matrix is too small
85	Invalid string length in DEC statement
88	Replacement position is out of range
89	Replacement string is too long
90	Too many RETURN statements executed
216	Too many files open
218	Uninitialized volume
219	Volume not on line
222	Insufficient space on volume
225	File not found
229	File already open for writing
232	File not open
234	Attempt to write to a protected file
235	Attempt to write to a protected file

ERROR NUMBERS 500-999

Number	Program	Meaning
501	MT21C1 MT22C1	Failure to develop a syntactic structure. Returns the text over which failure occured
502	MT21C1 MT22C1	No entry in analysis dictionary for a lexical unit. Returns the unfound word and remaining text.
503	MT21C1 MT22C1	No trailer record in analysis dictionary for a lexical unit. Returns the unfound word and remaining text.
504	MT21C1 MT22C1	Multiple syntactic structures for a text. This does not halt the system. Returns the text over which failure occured.
511	MT27C1	Failure to develop a semantic structure.
512	MT25C1	No entry in analysis dictionary for a lexical unit. Returns the unfound word.
513	MT25C1	No trailer record in analysis dictionary for a lexical unit. Returns the lexical unit.
515	MT25C1	Failure to find syntactic category for a lexical unit. Returns syntactic category and lexical unit.
551	MT31C1	No suitable transfer grammar entry found. Returns conditions side of expected rule.
552	MT31C1 MT41C1	No entry in transfer dictionary for some text. Returns unretrieved text.
553	MT31C1 MT41C1	No trailer record in transfer dictionary for a lexical unit. Returns the remaining unretrieved phrase, up to thirty-six characters.
562	MT31C1	No entry in transfer dictionary for a date. Returns remaining unfound data.
581	MT41C1 MT43C1	Failure to develop a syntactic structure for target language text. Returns the text over which the failure occured.
582	MT41C1 MT43C1	Error in grammar. Returns current portion of the grammar.
583	MT41C1 MT43C1	No dictionary entry. Returns sought lexical unit.
584	MT41C1 MT43C1	No trailer entry. Returns sought lexical unit.

585 MT41C1 No preposition computed.

592 MT45C1 Error in loading data into string format.

ERROR NUMBERS 1001-1100

Number	Meaning
1001	Mode illegal or incompatible with file type. (Occurs on pressing "CONTROL" and "C" keys together).
1002*	Transfer error
1003*	Checksum failure or sector number check failure
1004	Attempt to open too many files
1005	Program's assigned data area, control area, or buffer area beyond program limit
1006*	Volume (ie disc pack) uninitialized
1007*	Volume (ie disc pack) not on line
1008	Invalid file type specified when creating a file
1009	Invalid number of sectors or blocks specified when creating a file
1010	Insufficient space on volume (ie disc pack) when creating or extending a file
1011	Insufficient space in volume's main file directory (when creating or extending a file)
1012*	File name and generation number already in use
1013*	File name and generation number not found
1014	Area not allocated to file when contracting a file
1015	Contracting a file would lose records
1016*	User number greater than 12 bits
1017	File already open for writing when a second program attempts an "open for writing"; or already open when a second program attempts a create, extend/contract, relabel, or erase
1018*	Unit number in use for another file in the same program
1019*	Retention period not expired
1020	File not open
1021	Assign fail
1022*	Attempting to write or erase a "protected" file
1023	Attempting to write to a file that is "open for reading only"
1029	Invalid block number referenced
1051	Attempting to read a record that is not in the random access file
1100*	Serious fault or corruption in the Digico File Handling Package

* Serious fault: contact computing staff