Loughborough University

This item was submitted to Loughborough University as a PhD thesis by the author and is made available in the Institutional Repository (https://dspace.lboro.ac.uk/) under the following Creative Commons Licence conditions.

creative commons

COMMONS DEED

Attribution-NonCommercial-NoDerivs 2.5

You are free:

- to copy, distribute, display, and perform the work

Under the following conditions:

Attribution. You must attribute the work in the manner specified by the author or licensor.

Noncommercial. You may not use this work for commercial purposes.

No Derivative Works. You may not alter, transform, or build upon this work.

- For any reuse or distribution, you must make clear to others the license terms of this work.
- Any of these conditions can be waived if you get permission from the copyright holder.

Your fair use and other rights are in no way affected by the above.

This is a human-readable summary of the Legal Code (the full license).

Disclaimer

For the full text of this licence, please go to:
http://creativecommons.org/licenses/by-nc-nd/2.5/

BLDSC no:- DX 79085

LOUGHBOROUGH
UNIVERSITY OF TECHNOLOGY
LIBRARY

AUTHOR/FILING TITLE
PRESTON, M

ACCESSION/COPY NO.
132558/02

VOL. NO.

CLASS MARK

LOAN COPY

18 MAR 1994
29 APR 1994
02 JUN 1994
30 JUN 1995

LB 0132558025

A CONCRETE MIXING SYSTEM, MARKET ANALYSIS, DESIGN AND TESTING

by

MICHAEL EDWARD PRESTON

A DOCTORAL THESIS

SUBMITTED IN PARTIAL FULFILMENT OF

THE REQUIREMENTS FOR THE AWARD OF

DOCTOR OF PHILOSOPHY

OF THE

LOUGHBOROUGH UNIVERSITY OF TECHNOLOGY

NOVEMBER, 1980

© by MICHAEL EDWARD PRESTON 1980

ACKNOWLEDGEMENTS

I would like to acknowledge the help given to me in the completion of this work by:

Loughborough University

Mr S. Pugh, my supervisor, for his unceasing help and advice throughout the project.

Professor M. Graneek for his help and suggestions, particularly in the final stages of the project.

Mr T. Kirk, for his help in the computing used in the project.

Liner Limited

Mr P.S. Field and Mr P. Stokoe for their help and support in the provisioning of the facilities needed to carry out the project, and not least their financial support during the project.

Mr R. Hodgson, for his help in the actual testing and the provision of equipment and services, also the use of a friendly ear in which to recount my problems.

Mr D. Parr who did most of the work on the machines used during the testing.

The Ladies

Mrs M. Salsbury for the typing of the thesis.

Finally last but by no means least I would like to thank my wife, Beryl, for her unswerving support throughout the project, for the typing and addressing of questionnaires and all the reports, also the final draft of the thesis, without her help it would not have been possible.

Loughborough University
of Technology Library
Date Mar 81
Class
Acc. No. 132558/02
w7983170

SUMMARY

The sponsoring company which manufactures a range of construction equipment, required a study of the concrete industry. This necessitated a world wide survey of mixing equipment, concrete technology and the construction industry.

From this survey, criteria have been established by which mixing plant is judged in the market place. An assessment has also been made of the qualities of different types of mixing machines, as the information on the performance of the company's machine was inadequate a test program was undertaken. This test program involved two of the company's production machines and a prototype machine of new design. The results from this program were compared with those obtained from the literature search.

Information on the present problems and likely future developments in the construction industry were obtained by the use of postal market survey, both this survey and the test program indicated the need for further development of the prototype machine. This was achieved by further mixing tests and the use of a mathematical model of the mixing principle involved.

The speed of the operation of the developed prototype was such as to require a review of the methods used to handle the constituents prior to mixing. A total systems approach was then adopted and a product specification for a preproduction mixing system was prepared.

Detailed designs of two production mixers were produced, thus allowing a comparative systems costing to be carried out, this was found to be favourable when compared with present systems.

A corporate plan was then prepared to progress the new mixing system to a viable product.

LIST OF CONTENTS

		Page
1.0	Introduction	1
	1.1 Initiation of the Project	2
2.0	Concrete Technology	5
	2.1 History of Concrete	5
	2.2 Cement	6
	2.2.1 Portland Cements	7
	2.2.2 Blended Portland Cement	8
	2.2.3 Portland Cement with Additives	9
	2.2.4 Miscellaneous Products	9
	2.3 Aggregates	9
	2.3.1 Natural Aggregates	10
	2.3.1.1 Availability	10
	2.3.1.2 Testing Natural Aggregates	10
	2.3.2 Artificial Aggregates	12
	2.3.2.1 Lightweight Aggregate Concrete	14
	2.3.2.2 Site Production and Manufacture	14
	2.3.2.3 Applications	15
	2.4 Water	15
	2.5 Mix Design	15
	2.5.1 Cement and Concrete Associaton Mix Design Course	16
	2.6 Properties of Fresh Concrete	18
	2.6.1 Workability	18
	2.6.1.1 Slump Test	18
	2.6.1.2 Compacting Factor Test	19
	2.6.1.3 V.B. Consistometer	20
	2.6.2 Segregation	20
	2.6.3 Bleeding	21
	2.6.4 Vibration of Concrete	22
	2.7 Strength of Hardened Concrete	22
	2.7.1 Methods of Testing Hardened Concrete	23
	2.8 Methods of Concrete Manufacture	23
	2.8.1 Ready Mixed Concrete	23
	2.8.1.1 Mixing Methods Used by Ready Mixed Concrete Suppliers	24
	2.8.1.2 Quality Control	26

Page

2.8.2 Site Mixed Concrete 26

2.8.2.1 Quality Control 26

2.8.3 Factory Mixed Concrete 27

2.8.3.1 Quality Control 27

2.9 New Developments in Concrete 28

2.9.1 Lightweight Concrete 28

2.9.2 Admixtures 28

2.9.3 Fibre Concrete 30

2.9.4 Polymer Concrete 32

2.9.5 Foamed Concrete 32

2.10 Concrete Standards 32

2.10.1 British Standards 32

2.10.2 American Standards 33

2.10.3 Other Standards 33

2.11 Structural Failure 33

3.0 Market Survey of Concrete Mixing, Batching and Handling Equipment 34

3.1 Survey Methods 34

3.1.1 United Kingdom Survey 34

3.1.2 Survey of the Remainder of the World 34

3.1.3 Additional European Information 36

3.2 Analysis of Information Received from Survey 36

3.2.1 Specimen Table 36

3.3 Analysis of Tabulated Data 39

3.3.1 Generic Grouping 39

3.3.2 Feature Grouping 39

3.4 Computer Plotting 42

3.5 Combined Plotting 43

4.0 Concrete Mixing and Mixers 46

4.1 Types and Actions of Mixing Equipment 46

4.1.1 Batch System 46

4.1.2 Free Fall and Forced Action Mixing Machines 49

4.1.2.1 Free Fall Mixing 49

4.1.2.2 Forced Action Mixers 50

4.1.3 Continuous Mixers 51

4.2 The Theory of Concrete Mixing 51

4.3 Methods of Assessment of the Performance of Concrete Mixing Equipment 54

Page

4.3.1 Mix Quality 55

4.3.2 Range of Mixes 57

4.3.3 Speed of Mixing 57

4.3.4 Time of Mixing 57

4.3.5 Batch Size 57

4.3.6 Energy Consumed 58

4.3.7 Cleanliness of Discharge 58

4.3.8 Damage to Mix 58

4.3.9 Damage to Mixer 59

4.3.10 Compressive Strength of Cured Concrete 59

4.3.11 Labour Costs 59

4.3.12 Ease of Charging 59

4.3.13 Ease of Maintenance 60

4.3.14 Output 60

4.4 Concrete Mixer Testing Methods and Results of Tests Carried out to Date 60

4.4.1 Concrete Testing Methods 61

4.4.2 Resume of Concrete Testing 62

4.4.3 Analysis of Test Results 66

4.5 Chemical Mixing 66

4.6 Rotary Mixing Machine 67

4.7 Liner Information 68

5.0 Review of Project 70

5.1 Conclusions 70

5.2 Future Work 71

5.3 Presentation to Liner 72

6.0 Specification for Test Program 73

6.1 Specification Issue 1 73

6.2 Test House Survey 75

6.3 Conclusions 75

6.4 Changes to Specification 76

6.5 Rapid Analysis Machine 76

6.6 Specification Issue 2 77

7.0 Concrete Mixer Tests 78

7.1 Specification 78

7.2 Mix Constituents 80

7.3 Mixer Physical Data 80

7.4 Batching Equipment 82

Page

7.5 Concrete Testing 82

7.5.1 Fresh Concrete 82

7.5.2 Cured Concrete 84

7.6 Testing Procedure 84

7.7 Rapid Analysis Machine 88

7.8 Types of Mix 89

7.9 Mixers Tested 89

7.9.1 Cumflow RP 550 89

7.9.2 Fluiverse 92

7.10 Test Program 92

7.11 Modification to the Specification 96

7.11.1 Time of Mixing 96

7.11.2 Sieving of Coarse Fraction 96

7.12 Data Processing 98

7.13 Results 103

7.13.1 Batching 103

7.13.2 Plots of Results 104

7.14 Test Results from Other Reports 105

7.15 Results from Modified Cumflow 107

7.15.1 Results 108

7.16 Power Used in Mixing 109

7.16.1 Cumflow 550 109

7.16.2 Rotary 110

7.17 Conclusions 110

7.17.1 Specification 110

7.17.2 Efficiency of the Test Program 111

7.17.3 Sampling 111

7.17.4 Rapid Analysis Machine (R.A.M.) 112

7.17.5 Weighing of the Coarse and Fine Aggregate 112

7.17.6 Cubes 112

7.17.7 Density 113

7.17.8 Slump 113

7.17.9 "V - B" 113

7.17.10 Types of Mix 113

7.17.11 Results (Liner) 114

7.17.12 Results Rating, Test and Independent Data 116

7.17.13 Modified Cumflow 122

7.17.14 Energy Used in Mixing 124

Page

7.17.15 Supplementary Points on the Rotary Mixing Machine 125

7.18 Further Work 128

8.0 Rotary Mixing Machine, Development and Mathematical Model 129

8.1 Object of the Tests 129

8.1.1 Phase 1 129

8.1.2 Phase 2 130

8.1.3 Phase 3 130

8.1.4 Phase 4 130

8.2 Phase 1 132

8.2.1 Prototype Mixing Machine 132

8.2.2 Bowl Shape 132

8.3 Recommissioning and Test Program 135

8.3.1 Initial Tests 135

8.3.2 Increase in the "μ" Value of the Disc 136

8.3.3 Air Seal 137

8.3.4 Mixing Speed 138

8.3.5 Introduction of Materials 138

8.3.6 Power Consumption of Rotary Mixers 138

8.3.7 Main Mixer Test Program 139

8.4 Mathematical Model 141

8.4.1 Review of Information 141

8.4.2 Cine Film 142

8.5 Capacity Model 143

8.6 Power Model 145

8.6.1 Known Variables 145

8.6.2 Unknown Variables 146

8.6.3 Mixing Process 146

8.6.4 Rotor/Mix Interface 146

8.6.5 Mix/Stator Interface 147

8.6.5.1 Power Due to Rotation of Mix ω_R Direction 148

8.6.5.2 Power Due to Rotation of Mix in ω_R Direction 150

8.6.5.3 Power Due to Repositioning of Mix 150

8.6.5.4 Power Balance 151

8.6.5.5 Missing Link 154

8.6.6 Summary of Work to Date 161

8.7 Phase 2 161

8.7.1 Power Recordings 161

Page

8.7.2 Disc Covering Materials 162

8.7.3 Testing Methods 162

8.8 Results from Phase 2 162

8.8.1 Analysis of Results for Power Curves 163

8.8.2 Linatex 163

8.8.3 Recording of Power 163

8.9 Mathematical Model 166

8.9.1 Construction of w_R Against Slump Curve 166

8.9.2 Values of n 166

8.9.3 Power Model 166

8.9.4 Method of Determining μ_S 167

8.10 Prediction of Sizes and Power Requirements of Larger Size Mixing Machines 167

8.11 Summary of Work to Date 169

8.12 Phase 3 169

8.13 Methods 170

8.13.1 Capacity 170

8.13.2 Power 170

8.13.3 Pressure Gauge Calibration 170

8.13.4 Air Seal 170

8.13.5 Discharge of Mix 173

8.14 Results from Phase 3 173

8.14.1 Capacity 173

8.14.2 Power Consumption 174

8.14.3 Pressure Gauge Calibration 174

8.14.4 Air Seal 175

8.14.5 Discharge of Mix 175

8.15 Analysis of Results from Phase 3 177

8.16 Mathematical Model 179

8.16.1 Derivation of Stage Two Mixing Model 179

8.16.2 Power Used for 91 kg Mix Modified Stator 181

8.16.3 Volume Model 136 kg 182

8.16.4 Derivation of Stage Two Power Model for 136 kg 183

8.16.5 Power Plot Using Stage Two Formula 183

8.17 Effect of Increased Capacity on Larger Mixer Dimensions 184

8.18 Effect of "r" on the Capacity of the Mixer 185

8.19 Summary of Work 186

Page

8.19.1 Capacity 186
8.19.2 Air Seal 186
8.19.3 Mix Discharge 186
8.19.4 Volume Model 186
8.19.5 Power Model 187
8.20 Phase 4 187
8.21 Method 187
8.22 Results from Phase 4 188
8.22.1 Capacity 188
8.22.2 Power Required 190
8.22.3 Discharge 190
8.23 Analysis of Results from Phase 4 190
8.24 Volume Model 191
8.25 Power Model 191
8.25.1 Power Model 179 kg 193
8.25.2 Power Model 173 kg 193
8.25.3 Power Model Results 194
8.26 Conclusions from Phase 4 194
8.26.1 Capacity 194
8.26.2 Discharge of Mix 195
8.26.3 Volume Model 195
8.26.4 Power Model 195
8.26.5 General Comments 195
8.27 Future Work 196
8.28 High Speed Cine Film 196
8.28.1 General 196
8.28.2 Method 196
8.28.3 Results 197
8.28.4 Conclusions 197
8.29 197
8.29.1 Mix Quality 198
8.29.2 Power 198
8.29.3 Capacity 198
8.29.4 Compressive Strength 199
8.29.5 Rotor Seal 199
8.29.6 Rotor Covering Material 199
8.29.7 Discharge 200
8.29.8 Volume Model 200
8.29.9 Power Model 201

Page

8.29.10 Prediction of Larger Size Mixers 202
8.29.11 Mechanical Advantages 202
8.29.13 Disadvantages 204
8.29.13 Power 204
8.30 Overall Conclusions 205

9.0 Market Survey 206
9.1 Types of Information 206
9.2 Method of Survey 207
9.3 Questionnaire Design 207
9.4 Choice of Respondents 209
9.5 Questionnaire Returns Analysis 211
9.6 Analysis of Data 211
9.7 Summary of Postal Survey Results 212
9.7.1 Products 212
9.7.2 Ready Mixed Concrete 217
9.7.3 Contractors 219
9.7.4 Consultants 221
9.7.5 Liner Personnel 222
9.7.6 Summary of Answer Given to Questions 224
9.8 Marketing Phase 3 224
9.8.1 Export 224
9.8.2 The Home Market 225
9.8.3 Liner Sales Position 226
9.9 Independent Sales Information 228
9.10 Survey of Cement Production 229
9.11 Summary of Survey 230
9.11.1 Trends 230
9.11.2 Criteria for Mixer Purchase 230
9.11.3 General Comments on Marketing 231
9.11.4 Market Survey Comments 232
9.11.4.1 Future of Construction Industry 232
9.11.4.2 General Comments (including Liner salesmen) 232
9.12 Liner Limited 235
9.13 Liner Concrete (Takeover) 237

10.0 Chemical Mixing 240
10.1 Market Report 240
10.1.1 Introduction 240

Page

10.1.3 Industries/Users 243

10.1.4 Competition 246

10.1.5 Market Opportunities 246

10.1.6 Market Size 247

10.1.7 Conclusions 247

10.2 Conferences and Workshops Attended 248

10.2.1 Second European Conference on Mixing 248

10.2.2 Mixing in the Process Industries 248

10.2.3 Particle Workshop (Powder Handling Systems) 249

10.3 Comments of Section 10.1 250

10.4 Chemical Mixing (Company Involvement) 251

10.5 Conclusions 252

10.5.1 Company Involvement in Chemical Mixing 252

10.5.2 Rotary Mixing Machine 252

10.5.3 Systems Design 252

11.0 Analysis of all Data 253

11.1 Section 7.0 Testing of Concrete Mixing Machines 253

11.1.1 Present Company Equipment 253

11.1.2 Company Equipment Compared with Competition 253

11.1.3 Energy Used in Mixing 253

11.1.4 Rotary Mixing Machine 254

11.2 Rotary Mixing Machine Development and Mathematical Model 254

11.3 Market Survey (Concrete) 255

11.4 Chemical Marketing 256

11.5 Analysis 257

11.6 Recommendations for Future of Project 258

12.0 Batching 260

12.1 Present Systems 260

12.2 Capacity of New System 263

12.3 Calculation of Basic Capacities of System 263

12.4 Aggregate Storage 263

12.5 Cement Storage 263

12.6 Water Storage 264

12.7 Batching Times 264

12.7.1 Aggregate Batching Times 265

12.7.2 Fine Aggregate 265

12.7.3 Cement 267

Page

12.7.4 Water 267

12.8 Weighing System 268

12.9 Feed Systems 268

12.10 Control Systems 269

12.10.1 Complete Computer Control 270

12.10.2 Limited Computer Control 271

12.10.3 Automatic Control 271

12.10.4 Limited Automatic Control 271

12.10.5 Manual Control 271

12.10.6 Conclusions 271

12.10.7 Options Available 272

12.10.7.1 Standard Equipment Available 272

12.10.7.2 Programmable Logic Controllers 272

12.10.8 Cost of Control Equipment 272

12.11 Summary of Investigation into Batching Systems 274

12.12 Conclusions 274

13.0 Design of a Mixing System 275

13.1 The Product Specification 275

13.1.1 Mixing System Specification 275

13.2 Design of Mixer 276

13.2.1 Design of Power and Base Module 276

13.2.2 Design of Mixer Module 281

13.2.3 Design of Interface Module 283

13.2.4 Assembly of Modules 283

13.3 Maintenance Appraisal 284

13.3.1 Daily Maintenance 284

13.3.2 Long Term Maintenance 285

13.3.3 Breakdown Maintenance 285

13.4 Design of Batching System 286

13.4.1 Types of System 286

13.4.2 Design of a Batching System Using a Radial Boom Scraper 287

13.4.2.1 Overall Concept 287

13.4.2.2 Radial Scraper and Aggregate Feed 288

13.4.2.3 Aggregate Weighing 288

13.4.2.4 Skip Hoist 288

13.4.2.5 Cement Weighing 289

13.4.2.6 Water Weighing 289

Page

13.4.2.7 Mixer 289

13.4.2.8 Interface Module 289

13.4.2.9 Health and Safety 289

13.4.3 Design of a Batching System Using Overhead Storage 290

13.4.3.1 Overall Concept 290

13.4.3.2 Ground Feed Bins and Conveyor 291

13.4.3.3 Aggregate Storage 291

13.4.3.4 Intermediate Weigh Hopper 291

13.4.3.5 Batch Conveyor 292

13.4.3.6 Cement Storage 292

13.4.3.7 Cement Weighing 292

13.4.3.8 Water Weighing 292

13.4.3.9 Aggregate Holding Hopper 293

13.4.3.10 Interface Module 293

13.4.3.11 Mixer 293

13.4.3.12 Support Legs 293

13.4.3.13 Health and Safety 293

13.4.3.14 Control Cabins 294

13.4.4 Additional Batching Modules 294

13.4.4.1 Fibre Addition Module 294

13.4.4.2 Admixture Addition 295

13.4.5 Design of the Control System 295

13.4.5.1 Time Cycle 296

13.4.5.2 Control Diagram 297

14.0 Costing 303

14.1 Costing of Mixers 303

14.1.1 1.0 m Diameter Mixer 303

14.1.2 2.0 m Diameter Mixer 303

14.1.3 Cumflow RP 550 303

14.1.4 Cumflow RP 1500 303

14.1.5 Comparisons 303

14.1.6 Indexed Data 304

14.1.7 Comparative Plots 305

14.1.8 Summary of Plots 305

14.1.9 Simplified Mixer 307

14.2 Batching Plants 308

14.2.1 Standard Items 308

Page

14.2.2 Additional Items on RP 1500 System 308

14.2.3 Additional Items on Rotary 2.0 m System 308

14.2.4 Cost of RP 1500 System 308

14.2.5 Cost of Rotary 2.0 m System 308

14.2.6 Comments 309

14.3 Conclusions 310

14.3.1 Mixer 310

14.3.2 Batching 310

15.0 Project Conclusions 311

16.0 Future Developments 312

16.1 Company Decision (Initial) 312

16.1.1 Long Term Developments 312

16.1.2 Financial and Corporate Implications 314

16.2 Possible Options 315

16.2.1 Route 1 315

16.2.2 Route 2 315

16.2.3 Route 3 315

16.2.4 Route 4 315

16.2.5 Route 5 315

16.3 Detail Development 316

16.4 Development of Production Mixers 316

16.4.1 Mix Quality 316

16.4.2 Mixing Model Development 317

16.4.3 Slump v. Power 317

16.4.4 Structural Loads 317

16.4.5 Admixtures 318

16.4.6 Fibre Addition 318

16.5 Development of Pre-production Batching System 318

16.5.1 Speed 319

16.5.2 Accuracy 319

16.5.3 Control 319

16.5.4 Admixture Batching 320

16.6 Marketing 320

16.6.1 Concrete Mixing 320

16.6.2 Chemical Mixing 320

16.7 Company Decision (Final) 321

References 322

		Page
Appendix A	Graphs	
Appendix B	Relevant British Standards	B1
Appendix C	List of Relevant A.S.T.M. Standards	C1
Appendix D	Literature on Structural Failure	D1
Appendix E	Rapid Analysis Machine	E1
Appendix F	Questionnaires	F1
Appendix G	Summary of Postal Survey Results	G1
	1. Health and Safety at Work	G1
	2. Maintenance	G1
	3. Complimentary Remarks on Equipment Other Than Liner	G1
	4. Site Mixing v. Ready Mixed Concrete	G2
	5. Needs	G2
	6. New Developments in Concrete	G2
	7. Superplasticisers	G3
	8. P.F.A./Cement Blend	G3
	9. Lightweight Aggregates	G3
	10. G.R.C. and S.R.C.	G3
	11. Quality Control	G3
	12. Water Control	G3
	13. Slump Control	G3
	14. Automatic Systems	G4
	15. Liner	G4
	15.1 Company Image	G4
	15.2 Workmanship	G4
	15.3 Sales	G4
	15.4 Cumflow	G5
	15.5 Complimentary Remarks About Liner	G5
Appendix H	Liner Plant	H1
Appendix J	Specification of Mixing System	J1
	1. General	J1
	2. Mixer and Batching System	J1
	2.1 Output of System	J1
	2.1.1 Output of Mixer	J2
	2.1.2 Variability of Mixer Output	J2
	2.1.3 Capacity Developments	J2

Page

2.1.4 Output of Batching System J3

2.2 Size J3

2.2.1 Mixer J3

2.2.2 Batching Equipment J3

2.3 Modular Design J3

2.4 Safety J4

2.4.1 Noise J4

2.4.2 Dust J4

2.4.3 Accident Prevention (Active) J5

2.4.4 Accident Prevention (Passive) J5

2.4.5 Electrical J5

2.5 Finish J5

2.6 Cleaning J5

2.7 Variety Reduction J6

2.8 Control J6

2.9 Standards J6

2.9.1 Metrication J6

2.9.2 Specifications J6

2.10 Maintenance J6

2.10.1 Maintenance Periods J6

2.10.2 Identification J7

2.11 Labour Requirements J7

2.12 Environmental J7

3. Mixing Machine J7

3.1 Machine Physical Parameters J7

3.1.1 Mixer Section J8

3.1.2 Door J10

3.1.3 Structure J11

3.1.4 Disc Drive System J12

3.1.5 Covers J14

3.1.6 Control J16

3.1.7 Air Seal J17

3.1.8 Pollution Control J18

3.1.9 Mix Monitoring J18

3.1.10 Additional Services J19

3.2. Mix Definitions J20

3.2.1 Types of Mix J20

3.2.2 Mix Quality J22

Page

3.2.3 Mix Quality Chemical J23

3.3 Mixing Parameters J23

3.3.1 Speed of Mixing J23

3.3.2 Time of Mixing J23

3.3.3 Power Required J23

3.3.4 Cleanliness of Discharge J24

3.3.5 Rate of Discharge J24

3.3.6 Charging Sequence J24

3.3.7 Consistency of Mixing J24

4. Batching System J25

4.1 Material Storage J25

4.1.1 Capacity J25

4.1.2 Geometry J26

4.1.3 Loads J26

4.1.4 Material J26

4.1.5 Life J26

4.2 Feeding Methods J26

4.2.1 Aggregates J27

4.2.2 Cement J27

4.2.3 Water J28

4.2.4 Additional Feeding Requirements J28

4.3 Proportioning J29

4.3.1 Capacity J29

4.3.2 Speed J29

4.3.3 Accuracy J29

4.3.4 Life J29

4.4 Control J30

4.4.1 Philosophy J30

4.4.2 Degrees of Control J30

4.4.3 Interlocks J31

4.4.4 Life J31

4.4.5 Environment J31

Appendix K Marketable Mixer Size K1

1. Outputs Available K1

2. Marketable Size K1

2.1 Market Data (Liner and Teka) K1

2.1.1 Liner K2

2.1.2 Teka K2

Page

2.2 Market Survey K3
2.3 Relative Outputs K4
2.4 Relative Sizes K4
2.5 Design Requirements K4
2.5.1 Small Mixer K4
2.5.2 Large Mixer K4

Appendix L Design Calculations L1
1. Design L1
2. Larger Machines L3
3. Design Sizes L4
3.1 Small Mixer L5
3.2 Large Mixer L5
4. Design of 1.0 m diameter Mixer L5
4.1 1.0 Mixer (Dimensions) L5
4.1.1 Actual Dimensions of 1.0 m Mixer L6
4.1.2 Power L7
5. Design of 2.0 m diameter Mixer L10
5.1 Actual Dimensions of 2.0 Mixer L11
5.2 Power L11

Appendix M Mixer and Batching Plant Drawings

LIST OF FIGURES

		Page
1.	Project Plan	4
2.	Slump Test	18
3.	Compacting Factor Test	20
4.	Ve - Be Consistometer	21
5.	Relationship Between Strength and Water Cement Ratio	22
6.	Typical Batching Plant (Ready Mixed Concrete)	25
7.	Mixing Machine Tabulation Sheet	37
8.	Code Key	38
9.	Free Fall Mixers	47
10.	Forced Action Mixer	47
11.	Omni Mixer	49
12.	Pivoted Discharge Chute	52
13.	Reversing Drum	52
14.	Split Drum	52
15.	Pan Arrangement	52
16.	Loci of Tool Paths	53
17.	Theoretical Relationship Between Split Drum and Mixing Time	63
18.	Logic Diagrams	79
19.	Test Site Layout	85
20.	Sample Trolley Division	87
21.	Pan and Mixing Star	90
22.	Path of Mixing Blade During One Revolution	90
23.	Fluiverse Mixer	93
24.	Work Program (Pan and Reversing Drum)	94
25.	Work Program (Rotary and Modified Pan)	94
26.	Achieved Work Program	95
27.	Mixing Time Modifications	97
28.	Data Processing Logic Diagram	99
29.	Results Sheet	100
30.	Sample Typed Results Sheet	102
31.	Details of Plotted Data	104
32.	Details of Competitive Data	105
33.	Cumflow Speeds	107
34.	Cumflow Gear Chain	108
35.	Results	108
36.	Cumflow Water Addition	114
37.	Logic Diagram Testing	131

Page

38. Section Through Mixer 133
39. Section Through Mixer Bowl 134
40. Section Through Toroid 136
41. Drive-Off Bars and Splitter Bar 137
42. Principal Dimensions of Rotary Mixer 143
43. Mix Dimensions Analysis 144
44. Forces on a Particle 147
45. Planes of Rotation of Mix 147
46. Calculations of R_R 149
47. Angle 152
48. Calculation of "h" 153
49. Spiral Effect of Mix 155
50. Time/Distance Plot 156
51. Height/Distance Triangle 157
52. Time/Height Dependency 160
53. Air Seal 175
54. Stator Overhang 180
55. Calculation of New "h" 192
56. Tilling Takeover 239
57. Batching Plant 261
58. Batching Plant 262
59. Weighing Schematic 266
60. Typical Weighing System 273
61. Loads Applied to Mixing 277
62. Load Paths 278
63. Seal 280
64. Time Cycle Diagram Scraper 298
65. Time Cycle Diagram Overhead 298
66. Logic Diagram of Company Decisions 313

LIST OF TABLES

		Page
1.	Table of Admixtures	29
2.	File Number for Mixing Machine Data	40
3.	Mix 1 Excluding Countercurrent	118
4.	Mix 1 Including Countercurrent	118
5.	Mix 3 Excluding Countercurrent	119
6.	Mix 3 Including Countercurrent	120
7.	Mix 1 and 3 Comparisons	121
8.	Mix 1 and 3 Comparisons	122
9.	Mix 3 Modified Cumflow	124
10.	Mix 3 Modified Cumflow + Competitive Mixers	124
11.	Mix 1 and 3 Cement Content and Compressive Strength	126
12.	% Comparisons of Cement Content v. Compressive Strength	127
13.	Power Used in Mixing	139
14.	Mix Type V w_R Calculations	159
15.	Summary of Results from Phase 2	164
16.	Slump V μ_S Disc Speed 150 rpm	168
17.	Slump V μ_S Disc Speed 175 rpm	168
18.	Slump V μ_S Disc Speed 200 rpm	168
19.	Slump V μ_S Disc Speed 250 rpm	168
20.	Slump V μ_S Disc Speed 300 rpm	168
21.	Slump V μ_S Disc Speed 350 rpm	168
22.	Results from Phase 3	178
23.	Slump v. Power	181
24.	Slump v. Power	184
25.	Results from Phase 4	190
26.	Power Model Results 0.152 Stator	194
27.	High Speed Cine Film	197
28.	Questionnaire Returns Analysis	211
29.	Batch Frequency	212
30.	Mixer Sizes	213
31.	Mixer Age	214
32.	Slump	216
33.	Trend Analysis	216
34.	Criteria for Mixer Purchase	217
35.	Slump	218
36.	Trend analysis	218

		Page
37.	Criteria for Mixer Purchase	219
38.	Mixer Capacity	220
39.	Mixer Age	220
40.	Trends	221
41.	Criteria for Mixer Purchase	221
42.	Trends	222
43.	Criteria for Mixer Purchase	222
44.	Criteria for Mixer Purchase	223
45.	Market Data Liner(Home)	225
46.	Market Data Liner Reversing Drum	226
47.	Market Data Liner Cumflow	227
48.	Market Data Liner Cumflow Modified	226
49.	Market Data Home:Export	228
50.	Market Data Liner Percentage Sales (R.D.)	229
51.	Cement Output (Worldwide)	229
52.	Trends New Developments	230
53.	Criteria for Mixer Purchase	231
54.	Market Size (Chemical Mixing)	243
55.	Mix Constituents	264
56.	Cost Comparisons	304
57.	Cost Index	304
58.	Cost Plots Data	305
59.	Low Cost Rotary	307
60.	Batching Plant Cost	309

LIST OF PLATES

		Page
7.1	Recording Wattmeter	81
7.2	Bottom Discharge Skip	81
7.3	Invarac Water Tank	83
7.4	Cube Storage	83
7.5	Sample Trolley	86
7.6	Pan Type Mixer	86
7.7	Cumflow Mixer	91
7.8	Cumflow Mixer and Sampling Trolley	91
8.1	Transducer Switch System	171
8.2	Chart Recorder	171
8.3	Dead Weight Tester	172
8.4	Air Pressure Equipment	172
8.5	Mixing Action	174
8.6	Mix Discharge	176
8.7	Mix Discharge	177
8.8	Mixing Action	189
8.9	Mixing Action	189

LIST OF GRAPHS

	X AXIS	Y AXIS	NOTE
3.1	NOMINAL CAPACITY	MANUFACTURER	
3.2	POWER	MANUFACTURER	
3.3	COST	MANUFACTURER	
3.4	WEIGHT	MANUFACTURER	
3.5	OUTPUT	MANUFACTURER	
3.6	COST	NOMINAL CAPACITY	
3.7	COST	WEIGHT	
3.8	WEIGHT	NOMINAL CAPACITY	
3.9	OUTPUT	NOMINAL CAPACITY	
3.10	POWER	NOMINAL CAPACITY	
3.11	WEIGHT	OUTPUT	
3.12	POWER	OUTPUT	
3.13	COST	OUTPUT	
3.14	COST/OUTPUT	OUTPUT	
3.15	COST/OUTPUT	OUTPUT	
4.1	COST	NOMINAL CAPACITY	
4.2	POWER	NOMINAL CAPACITY	
7.1	FILE	% CONTENT	
7.2	TIME	C OF V	COARSE
7.3	TIME	C OF V	FINE
7.4	TIME	C OF V	WATER
7.5	TIME	C OF V	CEMENT
7.6	TIME	C OF V	COMP ST
7.7	TIME	C OF V	COARSE
7.8	TIME	C OF V	FINE
7.9	TIME	C OF V	WATER
7.10	TIME	C OF V	CEMENT

	X AXIS	Y AXIS	NOTE
7.11	TIME	C OF V	COMP ST
7.12	COMP ST	CEMENT CONTENT	
7.13	TIME	C OF V	COARSE
7.14	TIME	C OF V	FINE
7.15	TIME	C OF V	CEMENT
7.16	TIME	C OF V	COMP ST
7.17	TIME	C OF V	COARSE
7.18	TIME	C OF V	FINE
7.19	TIME	C OF V	CEMENT
7.20	TIME	C OF V	COMP ST
7.21	TIME	C OF V	COARSE
7.22	TIME	C OF V	FINE
7.23	TIME	C OF V	CEMENT
7.24	TIME	C OF V	COMP ST
7.25	TIME	C OF V	COARSE
7.26	TIME	C OF V	COMP ST
7.27	TIME	C OF V	COARSE
7.28	TIME	C OF V	FINE
7.29	TIME	C OF V	WATER
7.30	TIME	C OF V	CEMENT
7.31	TIME	C OF V	COMP ST
7.32	TIME	POWER	MODIFIED CUMFLOW
7.33	OUTPUT	CYCLE TIME	ROTARY
7.34	MIXING TIME	COMP ST	
8.1	POWER	DISC SPEED	NO LOAD
8.2	POWER	ROTOR SPEED	1, 2, 3
8.3	POWER	ROTOR SPEED	5, 6, 7, 8
8.4	POWER	ROTOR SPEED	9, 10, 11, 12

	X AXIS	Y AXIS	NOTE
8.5	POWER	ROTOR SPEED	13, 14, 15, 16, 17
8.6	POWER	ROTOR SPEED	18, 19, 20, 21
8.7	SLUMP	$\tilde{w}_R$	
8.8	$\tilde{w}_R$	n	
8.9	SLUMP	POWER	350 rpm
8.10	SLUMP	POWER	300 rpm
8.11	SLUMP	POWER	250 rpm
8.12	SLUMP	POWER	200 rpm
8.13	SLUMP	POWER	175 rpm
8.14	SLUMP	POWER	150 rpm
8.15	SLUMP	POWER	100 rpm
8.16	EFFECTIVE μ_S	ROTOR SPEED	
8.17	SLUMP	POWER	175 rpm (91 kg)
8.18	SLUMP	POWER	175 rpm (136 kg)
8.19	SLUMP	POWER	175 rpm (181 kg)
8.20	GAUGE PRESSURE	REF PRESSURE	GAUGE CAL
8.21	ANGLE DEGREES	MIX WEIGHT	
8.22	MIXER DIA	MIXER VOLUME	
8.23	SLUMP	POWER	173 kg, 179 kg PHASE 4
9.1	CAPACITY	AGE	
9.2	AGE	% OF SAMPLE	
9.3	CAPACITY	PERCENTAGE	
9.4	AGE	PERCENTAGE	
9.5	YEAR	SALES	
14.1	COST	NOMINAL CAPACITY	
14.2	COST	WEIGHT	
14.3	WEIGHT	NOMINAL CAPACITY	

	X AXIS	Y AXIS	NOTE
14.4	OUTPUT	NOMINAL CAPACITY	
14.5	POWER	NOMINAL CAPACITY	
14.6	WEIGHT	OUTPUT	
14.7	POWER	OUTPUT	
14.8	COST	OUTPUT	
14.9	COST/OUTPUT	OUTPUT	
14.10	COST/OUTPUT	OUTPUT	

LEGEND

A	=	Area of sector.	m^2
C.F.	=	Centrifugal force.	Newtons
C.C.	=	Counter current.	
D	=	Diameter at point C.	m
D_T	=	Total diameter of stator.	m
E_{w_R}	=	Force due to w_R	Newtons
E_{w_r}	=	Force due to w_r	Newtons
N	=	Number of revolutions of the mix in w_R direction in 1 second.	
N.C.	=	Normal Cumflow.	
P	=	Pressure on load.	kN/m^2
R.D.	=	Reversing drum.	
R.P.M.	=	Revolutions per minute.	
$R_{M/D}$	=	Ratio mix to disc speed.	
R_R	=	Effective radius of mix. (see 8.6.5.1)	m
S	=	Distance travelled by mix particle.	m
T	=	Torque.	N.m
T_S	=	Time required to introduce solid.	s
T_W	=	Time required to introduce water.	s
T_M	=	Time of mixing.	s
U	=	Distance moved in one revolution of mix in w_R plane.	m
U.V.	=	Ultra violet.	

V	=	Volume of mix.	m^3
V_1	=	Velocity of disc tip.	m/s
W	=	Weight of mix.	kg
Z	=	Stator position dimension.	m
a	=	A constant for mix analysis.	
b	=	Distance travelled by mix in plane w_R	m
d	=	Distance moved by the mix in contact with the stator, in one revolution in the plane w_R	m
g	=	Gravitational acceleration (9.81)	m/s^2
h	=	Maximum height attained by mix.	m
hr	=	Hours.	
i	=	Index of summation.	
j	=	Dimension (Fig.43).	m
kg	=	Kilogram.	
kW	=	Kilowatts.	
m	=	Metres.	
n	=	Number of revolutions per second in the plane w_R	rev/s
n_p	=	Disc speed.	rev/min
n_s	=	Number of scores contributing to total.	
p	=	No load pressure.	kN/m^2
q	=	Rotor speed.	rev/min.
r	=	Minor radius of stator.	m
s.d.	=	Standard deviation.	
s	=	Seconds.	

t	=	Mixing time.	s
t_m	=	Time for mix to drop.	s
t_r	=	Particle rise time.	s
v	=	Coefficient of variation.	
w.g.	=	Water gauge.	m
x	=	Sample value.	
$\bar{x}$	=	Mean of sample.	
β	=	Mix streamline angle.	deg
γ	=	Angle subtended by mix above horizontal.	deg
Ω	=	Angle subtended by mix below horizontal.	deg
δ_{tot}	=	Total standard deviation.	
δ_{fill}	=	Standard deviation at start of mixing time related to charging and premixing.	
δ_{layer}	=	Standard deviation due to layering of mix during mixing process.	
δ_{disc}	=	Standard deviation due to discharge process.	
δ_{meas}	=	Standard deviation due to measuring method.	
θ	=	Included angle of radius 'r' bounded by stator.	
μ	=	Coefficient of friction.	
μ_S	=	Effective coefficient of friction.	
ψ	=	Angle of arc centre of gravity above or below horizontal.	deg
ω_r	=	Angular velocity of toroid about its core.	rad/S
ω_R	=	Angular velocity of toroid about centre of toroid.	rad/S

NOTES ON READING THESIS

1. In order to simplify the reading of this document the graphs have been placed in Volume II Appendix A and hence may be laid out at the side of the main document.

2. Plots 3.1, 3.2, 3.3, 3.4 and 3.5 have the axes interchanged to allow easier interpretation of the data contained.

3. In this thesis the "Rotary" mixer is that using the toroidal mixing action and does not indicate any other type of mixing machine.

4. The use of the abbreviation R.M.C. in this thesis indicates the generic name for Ready Mixed Concrete industry in general and not the company by this name.

5. All dimensions quoted in this document are in metres unless otherwise stated.

1.0 INTRODUCTION

Concrete, being one of the most commonly used structural materials in the world, is not a new material and was first used in the time of the Romans, but it was not until the early nineteenth century that it again became popular. This revival was mainly due to the discovery of Portland cement, but in addition to this, the development of reliable and small prime movers allowed the development of a power driven site mixing machine thus enabling the production of large quantities of mixed concrete.

With this background of development the Liner Concrete Machinery Company was founded in 1917. The company developed and sold various types of concrete equipment, this included a range of on-site concrete mixing machines. A new principle of mixing was developed and patented by the company; this mixing action was the "Cumflow" and is still used in the larger machines made by the company today.

In the past few years the general level of technology in the construction industry has improved and this is particularly true of concrete. This development has in some ways been reflected in the design of mixing equipment, but most of the developments have come from the European countries, this has made some headway into the British home market and hence reduced the share held traditionally by Liner.

The company now manufactures a range of construction equipment, in addition to the range of mixing plant; this equipment has been modernized in recent years thus culminating in the introduction of a new concept in on site materials handling aptly named the "Giraffe" Site Placing vehicle.

With these facts in mind the company saw the necessity to review the whole field of concrete production with particular reference to

mixing. It was suggested that the investigation should be undertaken as a Ph.D. project in conjunction with the Engineering Design Centre at Loughborough University.

The initial project brief was:-

"To carry out an in depth research study into improved mixing practices as required by the construction and processing industries, for both site and central production applications."

The results of this research are to form the core of the company's product strategy for the next generation of mixing equipment.

1.1 INITIATION OF THE PROJECT

At the initiation of the project the most productive starting point was that of the concrete to be mixed, this material has many more facets than may originally be supposed and a knowledge of them all was considered necessary to allow valid judgements to be made during the course of the research. As part of the initial information gathering exercise, attendance at the following events was arranged.

a) A conference on the Ready Mix Concrete Industry at Dundee University.

b) A course on Concrete Mix Design at the Cement and Concrete Association.

With the information gained at these two events it was decided that a parallel approach should be used to obtain information, this approach involved researching each of the following areas.

1) The constituents of concrete.

2) The methods of concrete production including methods of batching, mixing and placing.

3) The main areas of use of concrete and any specialist requirements necessary.

4) The latest developments in concrete and plant.

The methods used to obtain information can be considered under three headings.

1) Information obtained by direct methods, that is the visiting of sites and product manufacturers and talking to operatives and managers. In addition, a very useful source of information was found to be the local branch of "The Concrete Society". This society holds local meetings on topics of interest throughout the concrete industry and membership is open to all personnel involved in concrete.

2) Information obtained by a literature survey. This survey was structured to give a wide based knowledge of the concrete industry supplemented by information on the construction industry, mixing and structural failure allied to the mixing of concrete. It also included chemical mixing and new developments in any of the above areas.

3) Information obtained from a Market Survey of presently available concrete mixing plant, based on a world wide postal survey.

The information obtained from the above work is detailed in the relevant sections of this thesis; a key diagram to the development of this research is given in Fig. 1.

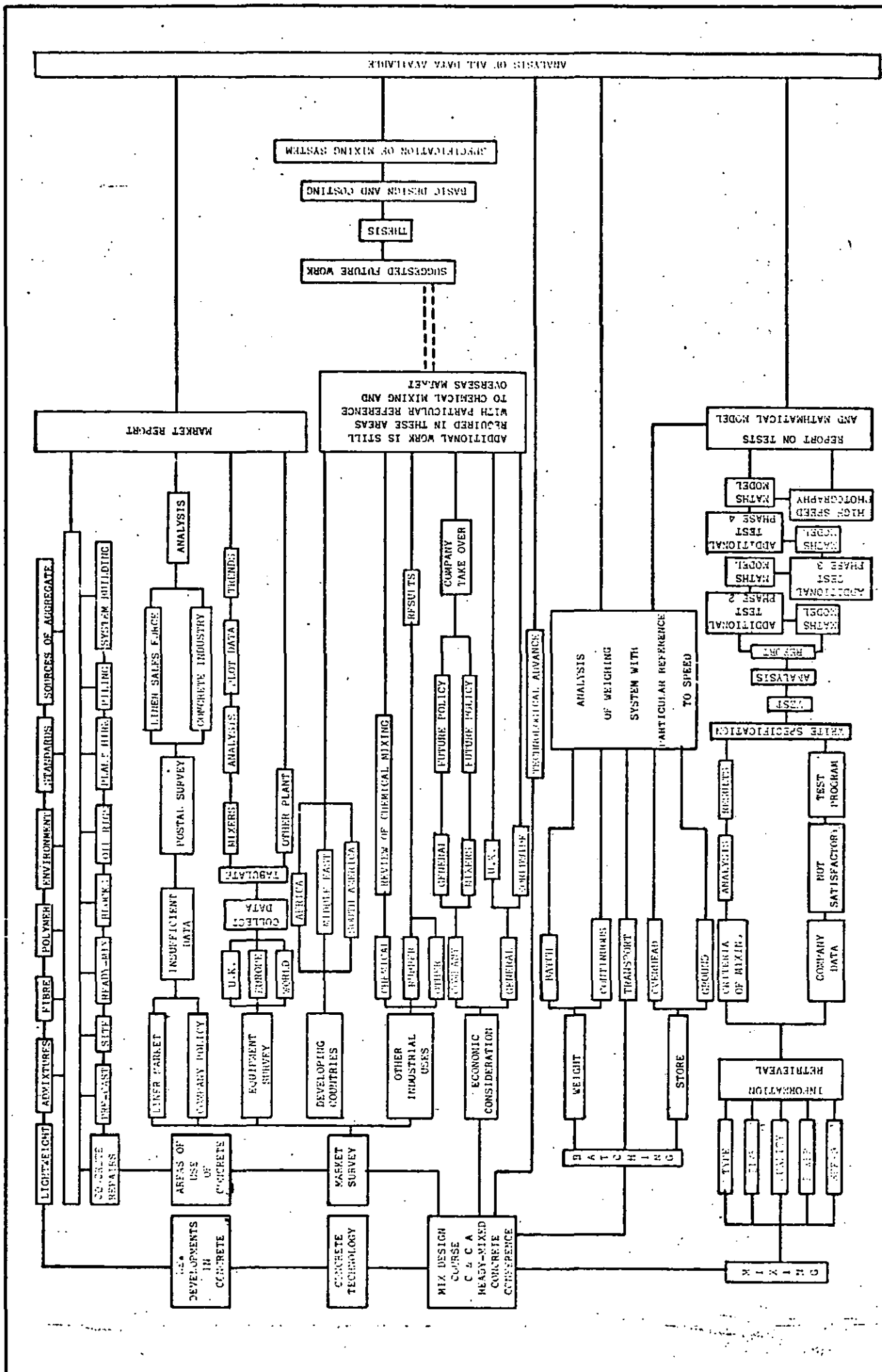
ANALYSIS OF ALL DATA AVAILABLE
SPECIFICATION OF MIXING SYSTEM
BASIC DESIGN AND COSTING
THESIS
SUGGESTED FUTURE WORK
ADDITIONAL WORK IS STILL REQUIRED IN THESE AREAS WITH PARTICULAR REFERENCE TO CHEMICAL MIXING AND OVERSEAS MARKET
MARKET REPORT
REPORT ON TESTS AND MATHMATICAL MODEL
SOURCES OF AGGREGATE
STANDARDS
ENVIRONMENT
POLYMER
FIBRE
ADMIXTURES
LIGHTWEIGHT
SYSTEM BUILDING
PILING
PLANT HIRE
OIL RIGS
BLOCKS
READY-MIX
SITE
PRE-CAST
CONCRETE REPAIRS
ANALYSIS
LINER SALES FORCE
CONCRETE INDUSTRY
POSTAL SURVEY
INSUFFICIENT DATA
LINER MARKET
COMPANY POLICY
TRENDS
PLOT DATA
ANALYSIS
MIXERS
TABULATE
COLLECT DATA
U.K.
EUROPE
WORLD
OTHER PLANT
AFRICA
MIDDLE EAST
SOUTH AMERICA
EQUIPMENT SURVEY
DEVELOPING COUNTRIES
REVIEW OF CHEMICAL MIXING
RESULTS
CHEMICAL
RUBBER
OTHER
COMPANY
OTHER INDUSTRIAL USES
COMPANY TAKE OVER
FUTURE POLICY
FUTURE POLICY
GENERAL
MIXERS
U.K.
SORTIMIDE
GENERAL
ECONOMIC CONSIDERATION
TECHNOLOGICAL ADVANCE
ANALYSIS OF WEIGHING SYSTEM WITH PARTICULAR REFERENCE TO SPEED
BATCH
CONTINUOUS
TRANSPORT
OVERHEAD
GROUND
WEIGHT
STORE
BATCHING
MATHS MODEL
HIGH SPEED PHOTOGRAPHY
ADDITIONAL TEST PHASE 4
MATHS MODEL
MATHS MODEL
ADDITIONAL TEST PHASE 3
ADDITIONAL TEST PHASE 2
MATHS MODEL
REPORT
ANALYSIS
TEST
WRITE SPECIFICATION
RESULTS
ANALYSIS
CRITERIA OF MIXING
TEST PROGRAM
NOT SATISFACTORY
COMPANY DATA
INFORMATION RETRIEVEAL
TYPE
MIXING
AREAS OF USE OF CONCRETE
MARKET SURVEY
NEW DEVELOPMENTS IN CONCRETE
CONCRETE TECHNOLOGY
MIX DESIGN COURSE C & C A READY-MIXED CONCRETE CONFERENCE

Fig. 1

2.0 CONCRETE TECHNOLOGY

In order to be able to design mixing equipment, a sound overall knowledge of the material to be mixed is required. At this stage it was thought that a general definition of concrete would be useful, this definition is somewhat simplistic and is given below:

> "Concrete is a mixture of Cement, aggregates and water which hardens by a chemical action of hydration."

This definition may be modified by the addition of other constituents to change the basic properties of the concrete.

2.1 HISTORY OF CONCRETE

The use of cementing materials is very old, the cement used by the Egyptians was calcined gypsum, both the Greeks and Romans used cement of calcined limestone. The Romans made concrete by adding lime, sand, broken brick and water, this was the first concrete in history. With the decline of the Roman Empire, concrete fell into disuse. The first steps to reintroduce concrete were in about 1790 when John Smeaton was commissioned to rebuild the Eddystone Lighthouse. He found that the best mortar was produced when pozzalana was mixed with limestone containing a high proportion of clay matter.

The next important developments towards a dependable hydraulic cement was made by Joseph Asdin in 1824. He called his product Portland Cement because it resembled a building stone that was quarried on the Isle of Portland, Dorset.

Reinforced concrete was evolved and initially developed by W.B. Wilkinson of Newcastle-upon-Tyne in 1854. Forty patents had been taken out by the turn of the century and the basic properties and

principles of design had been determined by this time.

In 1917 the value of mechanical vibration was discovered by E. Freyssinet, followed in 1918 by Duff Abrams establishing the relationship between compressive strength of concrete and the ratio of water to cement. (1) An increasing acceptance of reinforced concrete as a construction material is indicated by the worlds demand for Portland Cement which reached 690 megatonnes in the year 1975. (2) One of the reasons for this increase in the use of concrete in all forms was the development of the power driven on-site mixing machine. This development took place before the end of the 19th century and has been the subject of 75 years development in detail and has taken advantage of prime mover developments, but no radical change in the machine's basic operation has been apparent over this time.

2.2 CEMENT

Hydraulic cements react exothermically with water to form hard strong masses having extremely low solubility. The world demand for these cements is measured in hundreds of millions of tonnes per year, which means that they have to be produced from naturally occurring raw materials rather than from pure chemicals. Because impurities are associated with the mineral deposits used, commercial cements contain a range of active compounds rather than one compound alone. Modern production methods make it possible to favour the desired compound and suppress the undesired one, and thus to control the composition and properties of cement.

Four main types of cement are made and these come under one of the following headings:-

1) Portland Cements

2) Blended Portland Cements

3) Portland Cements with additives

4) High alumina cements.

Categories 1 and 2 are in general use and 3 and 4 being mainly for special purposes. High alumina cements are completely different from Portland cements both in composition and method of manufacture. The methods of use also differ from those of Portland cements, and in some cases its use has been banned due to a series of structural failures.

2.2.1 Portland Cements

The active constituents in all Portland cements are calcium silicates, formed by clinkering materials rich in calcium and silicon in specially designed kilns.

Ordinary Portland Cement O.P.C.

When manufactured to comply with British Standard BS 12 the cement has a medium rate of hardening. It is suitable for most types of work and is the most widely used of all the Hydraulic cements. (3)

Rapid Hardening Portland Cement

This cement has a similar composition to that of O.P.C. but is more finely ground. This does not increase the speed of setting, but does increase the rate of hydration at early ages, and this leads to the increased rate of early hardening.

Ultra-Rapid-Hardening Portland Cement

This cement again has a similar composition to that of O.P.C. but is again more finely ground than either O.P.C. or rapid hardening

Portland Cement, and this fineness gives an exceptional rate of early strength development.

Sulphate-Resisting Portland Cement

The possible tricalcium aluminate content of this cement is limited by BS 4027 as it is the hydration product of this compound which is susceptible to attack by the sulphates present in some soils. (4)

Low Heat Portland Cement

The constituents of this cement are modified to hydrate more slowly and thus evolves heat less rapidly than O.P.C. The British Standard limits the heat produced by 28 days to a figure comparable with that of O.P.C. at 7 days. Its main use is in massive constructions where the rate of heat production with O.P.C. at its early stages might cause undesirable thermal stresses in the immature concrete. (5)

White Portland Cement

It is manufactured from such raw materials as China clay and high grade chalk, these materials being selected to be substantially free from colour forming impurities. This cement is primarily used where a white or coloured concrete is required for visual effect.

2.2.2 Blended Portland Cement

Portland Blast-Furnace Cement

This cement is made by grinding a mixture of O.P.C. clinker with selected granulated blast-furnace slag.

The slag shows little hydraulic activity at early ages and thus the heat produced is less and the cement hardens more slowly than O.P.C. The resistance of this cement to sulphate is considered to be intermediate between that of sulphate resisting cement and that of O.P.C. (6)

Low Heat Portland Blast-Furnace Cement

The reduced rates of hydration and hence heat production is achieved by modifying the mineral composition and adding slag similar in composition to that used in making Portland blast-furnace cement. (5)

2.2.3 Portland Cement With Additives

Masonry Cement

Mortars made with O.P.C. may lack the cohesiveness and water retention desirable for laying brickwork, blockwork and for rendering. This may be corrected by the addition of an additive, such as an air entraining agent which increases cohesiveness together with fine inert mineral powder which assists water retention and limits strength developments.

2.2.4 Miscellaneous Products

Special additives are incorporated with O.P.C. to produce oil-well, hydrophobic and water repellent cement.

2.3 AGGREGATES

The mixture of hydraulic cement and water will harden into a given shape but this mixture finds little use in practice due to high cost and the large amount of shrinkage when drying.

To reduce cost and give the physical properties required, it is usual to put into the mix insoluble non-cementitious particles called aggregates. These aggregates usually form between 50% and 80% of the volume of the finished concrete.

The general requirements for aggregates are that the material shall have no adverse effect on the hardening or durability of the concrete. The material shall be free from dust which may reduce the bond between

it and the cement paste, it shall not contain constituents which decompose or change significantly in volume on exposure to the atmosphere.

2.3.1 Natural Aggregates

These aggregates are obtained from natural sources and include gravels, crushed and uncrushed rocks and sand. Gravel may be excavated from pits or dredged from river beds or extracted from the sea. A screening plant separates gravel into various sizes and removes dirt by washing, the oversize particles are crushed and rescreened. Crushed stones in various sizes are produced by passing quarried material through primary and secondary crushers and then through screens.

British Standard 882 lays down the requirements for natural aggregates and embodies some useful definitions. (7) i.e.

a) Course aggregate is material substantially retained on a 5 mm mesh B.S. sieve.

b) Fine aggregate is a material mainly passing a 5 mm mesh B.S. sieve.

c) "All in" aggregates are a mixture of coarse and fine aggregate.

2.3.1.1 Availability

The availability of natural aggregates is becoming more limited, this is particularly true of river bed gravels and sand, the situation is particularly acute in the South East of England. Hence there is a general move towards crushed stone in these areas.

2.3.1.2 Testing Natural Aggregates

By the very nature of these aggregates which occur naturally, there is a need to determine their basic qualities. British Standard 812 covers the testing requirements and the main areas of testing are:-

a) Silt, clay and fine dust.

b) Organic impurities.

c) Grading and sieve analysis.

d) Bulk density.

e) Moisture content.

a) Silt, Clay and Fine Dust

A small amount of clay, silt or fine dust is not usually harmful, coarse aggregates when tested to B.S. 812 should not contain more than 1%, but up to 3% is allowed in natural sands and up to 15% in crushed rocks. (8)

b) Organic Impurities

Organic impurities in a sand may have an adverse effect on the hardening of the concrete. B.S. 812 describes how these impurities may be found.

c) Graded and Sieve Analysis

This means the determination of the relative proportions of different size particles. This proportion is found by the process of sieve analysis. B.S. 812 lays down a standard method using sieves from B.S.410. The most common sieves used are:- 75 mm, 37.5 mm, 20 mm, 10 mm, 5 mm, 2.36 mm, 11.18mm, 600 µm, 300 µm, and 150 µm.

The dry sample is passed through each sieve and the amount retained weighed and expressed as a percentage of the total weight and a cumulative total passing each sieve found, this is then recorded graphically.

d) Bulk Density

The bulk density of a material is defined as its mass per unit volume when packed by a defined method.

e) Moisture Content

In order to find the amount of water present in the aggregate before mixing, a method which uses the saturated surface-dry condition of the aggregate is used, this is when the aggregate is saturated with water, i.e. the internal pores are full, but the surface has been dried. The moisture content is defined as the sum of the mass of water held in the pores relative to the dry condition, this gives the free moisture content of the aggregates. Method for determining this is given in B.S. 812.

2.3.2 Artificial Aggregates

In recent years there has been a steady increase in the production of artificial aggregates, these are made from industrial waste and by-products as well as from natural materials like clay and shale. The two main reasons for the increase are firstly that the stocks of natural aggregates are becoming depleted and secondly that most artificial aggregates are of low bulk density and hence give high thermal insulation. This is particularly relevant now due to the high price of energy.

The output of lightweight aggregates is at present of the order of 4 million tonnes per annum, as compared with approximately 105 million tonnes of natural aggregates, but the demand is steadily increasing.

The main types of lightweight aggregates are listed below, together with the mathods of production. (9) Most of these aggregates are covered by reference 10 and 11.

Furnace Clinker Density 720-1040 kg/m^3

The production has declined due to the use of gas, oil and pulverised fuels in firing furnaces.

Foamed Slag Density 670-920 kg/m^3

Molten slag from blast furnaces is treated while in the molten state with a controlled amount of water so that steam is trapped in the molten mass hence giving the slag a porous structure.

Expanded Clays and Shale Density 320-960 kg/m^3 (Aglite)

If certain types of clay and shale are heated to approximately 1200°C a point of fusion is reached and gases are generated in the mass which rapidly expand and form a honeycomb of cells walled with vitrified material.

Sintered Pulverized Fuel Ash Density 770-960 kg/m^3 (Hytag)

The fly ash collected from modern power stations is formed of small spherical glass particles which are of similar size to cement. This ash is wetted with water, mixed and then pelletized to form spherical pellets which are sintered at a temperature of 1400°C. The ash particles coalesce to form a lightweight aggregate.

Expanded Slate Density 560-860 kg/m^3 (Solite)

By rapidly heating certain types of slate gases are generated and a change in the laminor structure of cavities separated by glassy walls are produced.

Exfoliated Vermiculite (Density 60-160 kg/m^3)

Vermiculite is a mineral of laminar formation which expands and exfoliates rapidly when heated, thus reducing its density. The raw ore is usually imported from America, Australia or South Africa.

Expanded Perlite (Density 80-320 kg/m^3)

Perlite, a volcanic rock containing water, is crushed to graded sizes and then heated to incipient fusion. Again at this temperature

the water expands the glass into a balloon formation to produce a cellular material.

Wood Particles (Density 320-480 kg/m^3)

Particles of wood have been used as an aggregate but it is usually preheated.

Plastic Particles

Expanded plastic particles in the form of plastic beads in which an expanding agent has been dissolved. The plastic is softened by steam and then the expansive agent forces the beads to expand to about 3 times their original diameter.

2.3.2.1 Lightweight Aggregate Concrete

Lightweight concrete usually has a density of below 1850 kg/m^3 as opposed to normal concrete at about 2300 kg/m^3.

The density of lightweight concrete depends upon the type of aggregates, moisture content, mix proportions and the amount of compaction.

Lightweight concrete is a mixture of cement, coarse and fine aggregate and water. Methods of mix design for this concrete are similar to those for concretes using dense aggregates, but reference to individual producers of lightweight aggregates should be made.

2.3.2.2 Site Production and Manufacture

Standard batching and mixing plants may be used for the production of lightweight concrete, but again special care is necessary in mixing and in some cases pre-wetting of the aggregates may be necessary to reduce the amount of water absorbed by the aggregates during mixing.

2.3.2.3 Applications

The applications of lightweight concrete fall into three main areas, structural, blockwork and insulating. The lightweight aggregates may be used in place of dense aggregates in all types of structure but are mainly used in multi-storey blocks, pre-cast wall panels and pre-cast wall and roof units.

The use of pre-cast concrete is covered by British Standards and Codes of Practice. The production of lightweight loadbearing and non-loadbearing blocks accounts for the greatest use of lightweight aggregates.

The insulation of the roof and floor screeds may be achieved by the use of any lightweight aggregates.

2.4 WATER

The need for water in fresh concrete is two-fold. Firstly to hydrate the cement and secondly to convert the concrete into a paste and then to make the concrete workable. The water used for making concrete should not include any impurities which might adversely affect the hardening or durability of the concrete.

2.5 MIX DESIGN

The properties of concrete were mainly studied for the purpose of mix design, these are well defined by Neville, in reference (12).

> "The required properties of hardened concrete are specified by the design of the structure and the properties of fresh concrete are governed by the types of construction and by the techniques of placing and transporting. These two sets of requirements enable the engineer to determine the composition of the mix, bearing in mind the degree of control exercised on the site. Mix design can thus be defined as

the process of selecting suitable ingredients of concrete and determining their relative qualities with the object of producing as economically as possible concrete of certain minimum properties, notably consistence, strength and durability."

As may be seen from the above definition, a wide knowledge of the properties of the ingredients as well as production methods is needed to carry out successful mix design.

2.5.1 Cement and Concrete Association Mix Design Course

The course was designed to give a basic introduction to the methods used when testing mix constituents, mix design, testing fresh concrete and the design of specialist concretes. It involved the design of specified mixes, mixing the actual concrete and then testing its properties and comparing these with those required in the original specification.

A brief description of the course content is given below, mainly as a guide to the complexity of the mix design process and the methods available to the designer.

The first part of the course dealt with the methods used to test aggregates and fresh concrete. This was followed by the actual mix design, this was carried out using two methods, the first was the Basic Mix method (13) and secondly the newly introduced Department of the Environment method (D of E) (14). In each case the mixes designed were made, tested and adjusted to give the required properties.

The remainder of the course contained lectures and practical demonstrations on the following topics:-

1) Air entrained concrete.

2) Admixtures for concrete.

3) High strength concrete.

4) Mix costs.

5) Mixes containing fly-ash.

6) Lightweight concrete.

7) Mixes for decorative finishes.

8) Lean concrete.

9) Mixes designed for pumping.

10) Cost of mixes designed.

The course gives a wide basic knowledge of mix design and indeed of concrete. From the work carried out the main parameters which affect mix design are:-

1) The final strength of the hydrated concrete is the main design criteria when producing concrete.

2) The quality control of all operations must be adequate to maintain the level of strength required but without over specifying.

3) Water/cement ratio is the major factor which determines the strength of the final concrete. The lower the water cement ratio the higher the final strength, assuming all other components are the same.

4) The concrete must be workable to allow it to be consistently placed in the moulds or forms.

5) It is now possible to change the parameters of a mix by adding various chemicals, these should have a larger effect on mix design in the future.

2.6 PROPERTIES OF FRESH CONCRETE

2.6.1 Workability

Workability is that physical property of concrete which determines the amount of useful internal work per unit mass that is necessary to produce full compaction. (15)

The workability is affected by the grading, shape, porosity, surface texture of the aggregates and the amounts of cement and water present in the mix.

The overall workability is also affected by the methods of transportation and the shape, surface finish, and size of the formwork used.

At present three main methods of testing workability are used. Two are mainly used on sites, and the third is used only on larger sites and in laboratories. A brief description of each method is given below.

2.6.1.1 Slump Test

A hollow frustrum of a cone is made as shown in Fig. 2.

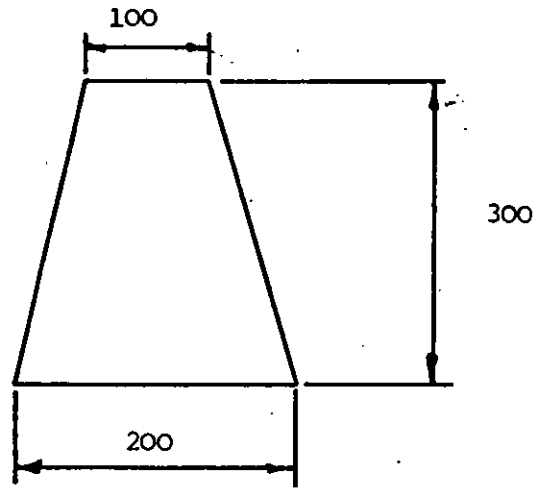

Fig. 2

The mould is cleaned and wetted internally and is put on a level plate, it is held in place and filled with the concrete in three layers each of equal volume. Each layer is tamped twentyfive times with a round rod of 16 mm diameter. The final layer is levelled off at the top of the mould, the mould is removed vertically, the cone of concrete then subsides, the reduction in height is measured immediately to the nearest 5 mm and recorded as the slump value. (16)

2.6.1.2 Compacting Factor Test

This test measures the degree of compaction achieved by a given amount of work carried out on the specimen of concrete. The apparatus consists of two rigid conical hoppers which are mounted axially above a cylindrical mould, each hopper has a hinged trap door, Fig.3. The upper hopper is filled flush with concrete, the trap door is opened so that the concrete falls into the lower hopper, the cylinder is covered during this operation. The cylinder is then uncovered and the trap door of the lower hopper is opened and the concrete discharged into the moulds. The excess concrete is then removed from the top of the cylinder using two steel floats. The weight of the partically compacted concrete is then recorded, the mould is then refilled with concrete from the same sample and fully compacted and the weight of this taken. The compacting factor is the ratio of the weight of partially compacted concrete to the weight of fully compacted concrete. (16).

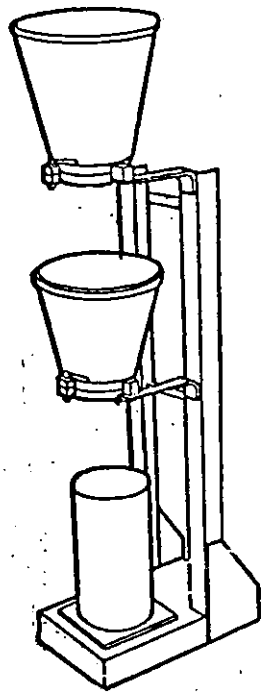

Fig. 3

2.6.1.3 V.B. Consistometer

This apparatus consists of a cylindrical container in which a slump cone of concrete is formed. A glass plate is placed on the top of this concrete cone and the vibrating base set in motion. The glass plate descends as the cone is converted into a cylinder and the vibrator is switched off as soon as all the underside of the plate is covered in cement paste. The time (secs) taken is known as Vebe degrees. Fig. 4. (16)

2.6.2 Segregation

Segregation is defined as a separation of the constituents of a homogeneous mix so that the distribution is no longer uniform. (17)

In the case of the concrete, the main cause of segregation is the difference in the particle sizes and their difference in specific

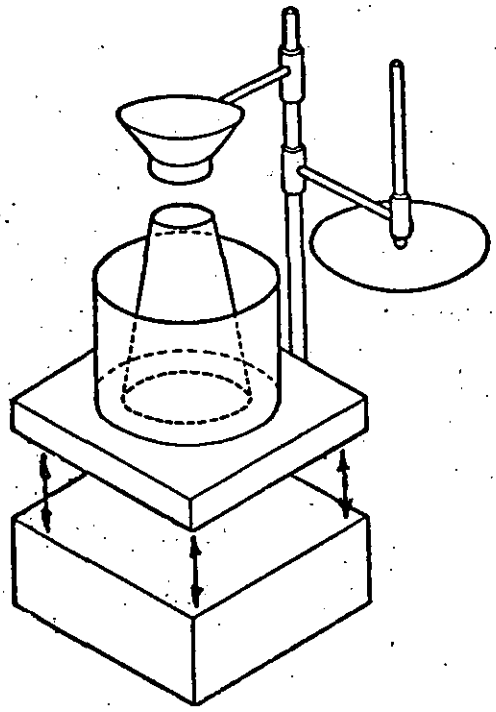

Fig. 4

gravities. Two types of segregation are usual in concrete. In the first type the larger particles travel further than the finer and the second type is particularly prevalent in wet mixes and is indicated by the separation of the grout from the mix.

2.6.3 Bleeding

This is a type of segregation where some of the water tends to rise to the surface of freshly placed concrete.

It is caused by the inability of the solid constituents to hold all of the mixing water when they settle downwards.

2.6.4 Vibration of Concrete

The vibration of concrete is primarily to remove entrapped air and achieve a homogeneous concrete. Fig. 5.

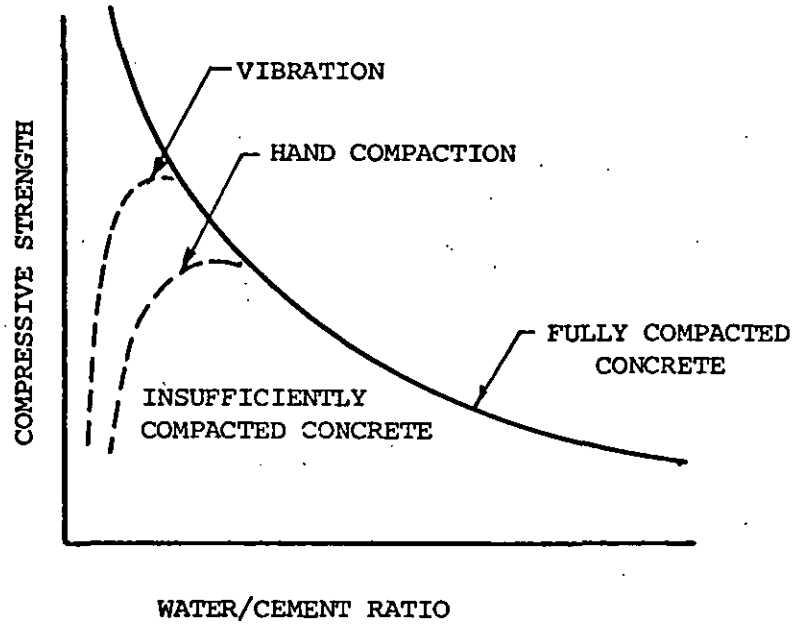

Fig. 5

Various types of vibrators are available, some are submerged in the concrete, some are clamped to the formwork and some are in the form of tables upon which the filled forms are placed.

2.7 STRENGTH OF HARDENED CONCRETE

In most cases the strength of concrete is considered the most important property, and gives a good overall picture of the concrete quality. The most important factors which affect the strength of hardened concrete are those of water/cement ratio and the degree of compaction.

The relationship between strength and water cement ratio is shown in Fig. 5, together with the effects of compaction. (18)

2.7.1 Methods of Testing Hardened Concrete

The only method to be considered here is that of Cube tests. A specimen of the concrete is cast in a 150 mm cube, a special mould is used for the casting, the cubes are kept in controlled conditions for a period of up to 28 days as specified by the various codes of practice.

The cube is then crushed in a testing machine which conforms to B.S. 1881:1970. The strength at crushing is then reported. (16) This result gives an indication of the potential strength of the concrete if cured in ideal conditions.

2.8 METHODS OF CONCRETE MANUFACTURE

The three main types of concrete manufacture are:-

1) Ready mixed concrete.

2) Site mixed concrete.

3) Factory mixed concrete.

Each method has been considered in turn, and the following gives a brief description of each.

2.8.1 Ready Mixed Concrete

The Ready Mixed concrete industry started in Britain in 1930 but initially growth was slow. The acceptance of the Ready Mixed concrete was gradual so that by 1960 there were still less than 200 depots supplying less than 4 million cubic metres of concrete. The major growth has been in the last fifteen years and the production of concrete in 1974 was in excess of 30 million cubic metres. (19)

It is estimated that approximately 2/3 of site concrete is supplied in the form of Ready Mixed. The reason for the dominance is thought to be one of convenience, for the contractor can call for concrete of a certain mix and workability at very short notice without the need to

purchase expensive plant and operatives. The move towards larger pours make the need to be able to supply large amounts of concrete in a short time period of importance and the only practical method of achieving this is to use the Ready Mixed supplier. (19)

Other considerations also appear in the equation, one of the main points is the ownership of the natural aggregate sources. A large proportion of the aggregate sources are owned by Ready Mixed concrete company, and the companys are naturally reluctant to supply aggregates to sites to allow the mixing of site concrete.

Another feature of this trade which has come to light since the initiation of the project, is the price fixing rings operated by the Ready Mixed suppliers. The rings effectively fix the price and supplier of concrete to any particular part of a city or county. This practice is at present under investigation by the prices commission and their report is awaited with interest.

2.8.1.1 Mixing Methods Used by Ready Mixed Concrete Suppliers

In mixing R.M.C. the two main methods used are the:-

1) Truck mixer.

2) Plant mixer.

The first method, the truck mixer, is the most common and accounts for most of the concrete delivered. The truck mixer fleet is almost entirely of three axle vehicles of 22/24 tonnes weight and will carry up to 6 m^3 of concrete. (20) The method used to charge the truck mixers is similar to that used throughout the industry, that is the cement aggregates are stored in bins and are weighed into a hopper, this batched material is then transported into the mixer truck via conveyor belt. The water is then added and drum rotated to mix the concrete. Fig. 6.

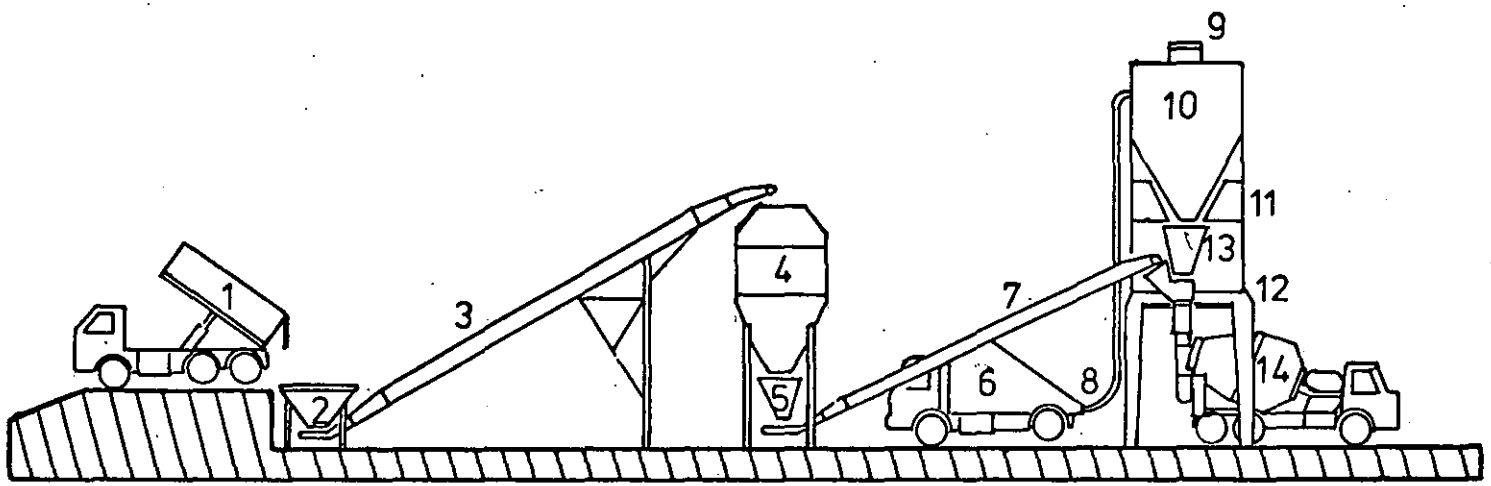

1. Sand and gravel delivery truck
2. 8.4 cu m (11 cu yd) ground feed bin
3. Radial traverse conveyor
4. 200 tonne aggregate storage bin, 4 or 5 compartments
5. Aggregate weigh bin
6. Cement tanker - bulk delivery
7. Weighed aggregate feed conveyor
8. Cement fill pipes
9. Cement Filters
10. 50 tonne cement silo, two compartment
11. Two 2300 litre (500 gal) water tanks
12. Automatic water metering system
13. Cement weigh bin
14. Truck mixer

Fig. 6

The second method uses the same basic batching equipment but incorporates a pan type mixer to give the required quality before being put into the truck mixer. This method is usually used for high quality concrete, and for concrete with difficult to mix aggregates.

2.8.1.2 Quality Control

The quality control of Ready Mixed concrete has in the past been variable and several schemes have been put forward to try and improve the situation. These include one administered by the manufacturers themselves. One of the main areas of advance may be the introduction of the Rapid Analysis Machine (R.A.M.). This machine allows a sample of concrete to be analysed for cement content in approximately 15 mins. This machine is not being readily accepted by the Ready Mixed concrete producers but has been installed by several of the main contractors in the U.K. to check incoming loads of R.M.C. (The R.A.M. is covered in greater detail in Section 6.0.)

2.8.2 Site Mixed Concrete

In the case of site mixed concrete, the basic batching methods used are similar to those of the R.M.C. company but the equipment and capacity will be smaller due to the equipment having to be transportable, the size of the equipment is one of the main problems in the use of site plant as the modern inner city development very often does not have any spare space for this type of plant. The smaller type of site mixing plant is mainly used to make the smaller amounts of concrete needed between the main pours.

2.8.2.1 Quality Control

The control of the quality of site mixed concrete is in most cases more difficult than that of the R.M. supplier due to the lack of demand

for full time mixer drivers. It is also difficult to check the quality of the concrete without the supervised manufacture of cubes and the facility of a well equipped laboratory. An additional problem in this area is the lack of skilled labour and its high cost when available.

2.8.3 Factory Mixed Concrete

The concrete mixed under factory conditions may be used in a variety of ways to produce pre-cast items from kerb stones, blocks, wall units, to large pre-stressed bridge spans.

Concrete produced and used in factory conditions is generally to a higher specification than that of Ready Mixed or site mixed, due to the more consistent production facilities available and more limited mix designs required.

The batching system used in factories are again similar to those used in Ready Mixed and site production, but this equipment is usually allied to a mixer of higher quality giving a more consistent final product which will give a saving in cement and hence unit costs.

2.8.3.1 Quality Control

As the products made in the factory unit tend to be limited in the type of concrete mix used, and this in turn limits the types of aggregate and cement used, the quality control problems are to some extent reduced, but in order to get the maximum economy and strength, a tight control on the batching and in turn water/cement ratios must be maintained. The factors usually have an integral quality control system which monitors the day to day variations in mix quality.

2.9 NEW DEVELOPMENTS IN CONCRETE

In reviewing the concrete industry, a series of new developments have been finding increasing favour during the past few years. These are:-

1) Lightweight concrete.
2) Admixtures.
3) Fibre concrete.
4) Polymer concrete.
5) Foamed concrete.

2.9.1 Lightweight Concrete

The increased use in this type of concrete is primarily based in the reduction in weight, requisite strength and durability, improved thermal insulation and good fire-proofing qualities. (9)

Lightweight concrete is manufactured by one of the following methods:

1. Leaving voids between coarse aggregate particles which are bound together with cement, this is called no-fines concrete.
2. Using various kinds of vesicular, cellular or expanded aggregate in a mix.
3. Entrapping small cells of air or gas in a cementing matrix which may also be light in weight, thus forming a foamed concrete.

2.9.2 Admixtures

The reason for using admixtures in concrete may be for one or more of the following reasons:- (21)

1. To delay the setting of the concrete.
2. To accelerate the hardening of the concrete.
3. To increase the workability of the concrete.

4. To improve the durability of the concrete.

5. To change the colour of the concrete.

A general list of admixtures at present in use is given in Table 1.

USE	Set retarder	Set accelerator	Strength accelerator	Water reducer	Air entraining agent	Water repellant	Thickening agent	Mineral powder	Pigment
High early strength		*	*	*					
Hot weather	**			*					
Cold weather			*						
Frost resistence				*	***				
Workability aid				***	*			*	
Chemical resistance				*	*			*	
Early formwork removal			*						
Pumping				*			*		
Precast cladding		*	*		*	*		*	*
Improved surface finishes					**	*		*	
High strength				***					
Mortars					**				
Permeability reduction				*	*	**			
Water proofing				*	*	**		*	
Mass construction	*							*	

Number of stars indicates degree of benefit, i.e. *** indicates best.

Table 1

Table 1

In addition to these admixtures a new type has been recently added, this is called a super plasticiser. It has the effect of reducing the interparticulate friction within the mix and thus allows the low water/cement ratio mixes to be free flowing and in some cases self levelling or self compacting.

The objections to using this type of admixture are two-fold. The first being the amounts that are used, these are quite small and thus make the possibility of overtreatment a real danger. If the mix is over treated, it suffers from segregation and bleeding.

The second problem is the more fluid mix exerts increased pressure on the form work and hence may increase the costs in this area.

The advantages are that the form can be struck sooner and savings in cement can be realised by using a lower water/cement ratio, also dry shrinkage can be reduced.

It is difficult to generalize about the economics of flowing concrete, but the most quoted example is that the addition of the super plasticiser is approximately equal to the reduction of the placing gang by one man. (22)

2.9.3 Fibre Concrete

The addition of fibres of various types to a Portland Cement motar, it combines the compressive strength of the mortar with the tensile strength of the fibres.

There are a number of fibres used, these are:-

1. Asbestos
2. Glass
3. Steel

A very comprehensive review of the present state of this art is given in Ref. (23).

The Concrete Society publication 'Fibre Reinforced Cement Composites' brief description of each type is given below.

1. Asbestos a naturally occurring fibrous silicate which has been extensively used as reinforcement.

The health dangers from asbestos in the form of asbestosis, a disease causing damage to the lungs, and various forms of cancer are only just being understood and may restrict the use of this material.

2. Glass - glassfibre which resists the attack of the alkaline environment of the cement matrix.

The properties of a glass reinforced cement composite depend upon the interaction of a number of variables cement type, water/cement ratio, aggregate/cement ratio glassfibre content etc.

In practice, product design tends to dictate a degree of standardisation, the quantity of glass is typically 5% and the orientation of the glass fibre strands will depend upon the method of fabrication being random 3 dimensional for simple cast material but random 2 dimensional for thin sections produced by the spray processing methods.

In the 3 dimensional casting methods, problems have been encountered with fibre damage in the mixing process and has limited its use to small cast components for which high mechanical strength is not required.

3. Steel Fibre. The addition of the steel fibres to concrete was started in the 1960's and has progressed into several areas, tunnel lining, precast products, concrete pipes, roads, airfields and flooring.

The introduction of the fibre is again the problem and several methods of introduction have been tried and several special dispensers are available. When in the mixing machine there is again a tendency for the wire to ball, particularly above a content of 2.7%. The most generally used fibres fall in the range of 0.30 mm dia. x 25 mm long to 0.60 mm dia. x 60 mm long.

2.9.4 Polymer Concrete

In order to overcome the limitations of Portland Cement, various other materials have been developed; polymers are one of these materials.

Polymers are synthetic, that is, they are constructed or manipulated into a form suitable for use in concrete. The polymers are designed at a molecular level specifically to give a known performance. In this they have their greatest benefit and worst drawback, they can be produced to give a very high bond between aggregates in concrete and hence strength, but are very expensive in comparison with cement. They must therefore be used with an overall eye to the economics of purpose they fulfil.

A review of the present state of polymer concretes is given in a Concrete Society report titled "Polymer Concretes". (24)

2.9.5 Foamed Concrete

Foamed or aerated concrete is formed by mixing with cement and water, coarse sand or PFA or many compatible materials with a preformed foam of small individual air cells of sufficient stability, sheer strength and surface tension to remain stable during the mixing, pumping, screeding and initial set of the material.

The density may be changed by varying the amount of foam used. The material is claimed to have all the essential criteria required of concrete, but at less cost.

2.10 CONCRETE STANDARDS

2.10.1 British Standards

The concrete industry is covered by British Standards for most areas from the actual cement to testing of aggregates through to the specifying of the actual mix proportions and indeed, the design of concrete mixing machines.

A list of the standards most relevant to the current work are included in Appendix B.

2.10.2 American Standards

The American concrete industry is likewise covered by a similar list of standards, these are STM Standards, and again a selected list of the most relevant are given in Appendix C.

2.10.3 Other Standards

Concrete standards are also published in many other countries, and they include DIN (Germany), AS (Australian) Standards, plus many more from the United States.

These standards usually cover very similar areas of work. A useful table of cross reference may be found in Ref. (25).

2.11 STRUCTURAL FAILURE

At this early stage of the project it was considered that an investigation into the main reasons for failure of concrete structures would give an indication of the quality of concrete mixing and batching. That is by checking the number of failures due to poorly mixed or batched concrete, the major problem found was basically lack of available data, a list of books available is given in Appendix D. In all the references found, not one case of a structural failure directly attributed to poorly mixed or batched concrete could be found.

The results at this stage were of doubtful practical value to the future of the project and no further work was planned.

NOTE

At the present time the Cement and Concrete Association have started an investigation into the causes of structural failure. It is understood that the effect of poor mixing will be one of the areas particularly considered. The results will be awaited with interest.

3.0 MARKET SURVEY OF CONCRETE MIXING, BATCHING AND HANDLING EQUIPMENT

In order to obtain the most recent information available on the products of other manufacturers of concrete mixing machinery, and to give as wide a view as possible of general concrete plant, a world wide survey was started. The methods used for the collection of the required information were three in number. The first applied to the United Kingdom and used a telephone enquiry system to obtain as rapid a response as possible, to allow the analysis of the data and a system to be devised for further data handling. The second was a world wide postal survey, and the third an exhibition visit. Details of each are given below.

3.1.1 United Kingdom Survey

In the case of the United Kingdom, the survey method used was to compile a list of companies supplying concrete mixing and batching equipment; this list was compiled by using various trade directories (26, 26), and by using a cross referencing system as many valid suppliers as possible were found. In compiling this list, one of the main problems encountered was that of incorrect or out of date entries, which applied to even the latest editions of the publications.

On completion of the list, each company was telephoned and asked to supply information on its range of concrete machinery.

The total number of respondents was 32 and the actual valid number of replies received was 20.

3.1.2 Survey of the Remainder of the World

In this survey it was decided to concentrate on the "most developed" countries. This definition was produced by the Marketing Science Institute, U.S.A., and gives a level of development based on certain socio-economic indications, such as:-

Total population.

Population density.

Rate of increase of population.

Percentage of population working.

Literacy.

Agricultural population as percentage of total.

Primacy of principal city.

These characteristics have been shown to rank countries on a scale of social development:-

Level

1. Most highly developed
2. Developed
3. Semi developed
4. Under developed
5. Very under developed

Level 1	Level 2
U.K.	Finland
West Germany	South Africa
Belgium	Spain
U.S.A.	Ireland
France	Mexico
Switzerland	Argentina
Canada	Venezuela
Netherlands	Chile
Sweden	Uraguay
Australia	Portugal
Italy	Malaysia
Denmark	Israel
Austria	Brazil
Japan	
New Zealand	
Norway	

In addition to the Level 1 countries, a selection of Eastern block countries have been considered.

The same method of determining the respondents as used in the U.K. survey was used. That is, the various world wide trade directories were consulted, and by using a cross referencing system, the "best" list was compiled. (25, 27, 28, 29 & 30).

A letter was sent to each company on this list asking for information on their range of products.

The total number of companies selected was 102 and the actual number of respondents was 94. It should however be noted that not all these contained information on mixing plant.

3.1.3 Additional European Information

In addition to the postal survey, information was obtained by a visit to the French construction exhibition at Paris. The visit proved to be of particular value as most of the European manufacturers were present and this allowed more specific information, particularly of prices, to be collected.

3.2 ANALYSIS OF INFORMATION RECEIVED FROM SURVEY

The data received from the survey was mainly in the form of technical literature, but with limited cost data.

In order to maximize the use of the technical information, it was decided to summarize the data in a tabular form. The table was formed of the most quoted technical points together with the optional extras available, and method of mixing used.

3.2.1 Specimen Table

A specimen table is shown in Fig. 7 together with a code key in Fig.8. The table is compiled for each mixer manufacturer and also for each

FILE NUMBER 1		COUNTRY UNITED KINGDOM		MANUFACTURER LINER			
MIXER		CODE	R.P 1250	R.P 1500	R.P 3000		
TYPE		CODE	C	C	C		
CAPACITY UNMIXED		LTRS	1250	1500	3000		
CAPACITY MIXED		LTRS	833	1000	2000		
CYCLES/HOUR		N	40	40	40		
OUTPUT/HOUR		M 3	33.3	40	80		
MAX.AGGREGATE SIZE		mm	38	38	38		
POWER	DRUM	HP	10	10	20		
	ROTOR	HP	20	30	40		
	ADDITIONAL	HP	X	X	X		
PAN/DRUM	DRIVE	CODE	E	E	E		
	TRANSMISSION	CODE	G	G	G		
	REVERSE	CODE	X	X	X		
	SPEED	RPM	8.2	8.2	7.3		
ROTOR	NUMBER OFF	N	1	1	1		
	NUMBER OF BLADES	N	6	6	6		
	SPRING LOADED	CODE	/	/	/		
	POSITION	CODE	44	44	37		
	SPEED	CODE	/ /	/ /	/ /		
	DISCHARGE/CLEANING BLADES	CODE	K	K	K		
	ALTERNATIVE BLADES	CODE	X	X	X		
DISCHARGE DOOR POSITION		CODE	K	K	K		
DISCHARGE DOOR CONTROL		CODE	A	A	A		
DISCHARGE DOOR ALTERNATIVE		CODE	X	X	X		
DIMENSIONS	PAN/DRUM DIA	mm	2499	2499	2844		
	PAN/DRUM DEPTH	mm					
	DISCHARGE HEIGHT	mm	X	X	X		
	DOOR SIZE	m					
WEIGHT		KG	4040	4980	7112		
COST		£	8801	9078	13077		
ADDITIONAL SERVICES		CODE	A	A	A		
ELECTRIC MOISTURE METRE		CODE	/	/	/		
LOADING SYSTEM POWER		CODE	V	V	X		
LOADING SYSTEM MECHANISM		CODE	E.W	E.W	X		
SCRAPER TYPE		CODE	X	X	X		
WEIGHER AGGREGATE		CODE	I	I	I		
WEIGHER CEMENT		CODE	X	X	X		
WATER		CODE	Q.R	Q.R	Q.R		
AUTO CONTROL		CODE	/	/	/		
MIX HEATING		CODE	X	X	X		
VEHICLE CHASSIS		CODE	X	X	X		
FILE		CODE	37-42	43-48	49-54		

Fig. 7

specific type of mixing action. The specimen is for the Liner range of Cumflow mixers. The coding is simple, for each size of mixer certain basic information is taken from the brochures, i.e. capacity, cycles per hour claimed, output per hour, maximum aggregate size. These are followed by the power requirements for the mixer and so on, covering the main features of the machines where a code is used. If the Pan/drum drive is coded E, this indicates that the drive type is electrical, this was simply read off the key in Fig. 8.

A table similar to that in Fig. 7 was compiled for each mixer/type.

CODE KEY			
A	AIR	R	DISTRIBUTION
B	BOTTOM	S	SHAFT (HORIZONTAL)
C	CUMFLOW	T	TURBO MIXER
D	DOOR	U	HOPPER
E	ELECTRICAL	V	HOIST
F	TILTING DRUM	W	WINCH
G	GEAR	X	NOT APPLICABLE
H	HYDRAULIC	Y	CENTRIFUGAL
I	ENCAPSULATED	Z	PERIPHERAL
J	PADDLE	S.D	SPLIT DRUM
K	CENTRAL	R.D	REVERSING DRUM
L	ECCENTRIC	C.C	COUNTER CURRENT
M	MECHANICAL	VAR	VARIABLE
N	MANUAL	F.R	FRICTION ROLLER
P	PLANETARY	D.P	DRIVEN PAN
Q	METER		

Fig. 8

3.3 ANALYSIS OF TABULATED DATA

From the tabulated data it was clear that certain basic parameters of the machines could be grouped together. These groupings are given in the following sections.

3.3.1 Generic Grouping

The machines may be grouped according to the type of mixing action used, this divides the information into four troups of types.

These are shown below:-

Type 1	Pan mixers +
Type 2	Paddle mixers
Type 3	Reversing drum mixers
Type 4	Tilting and split drum mixers

NOTE

+ Details of the type definitions are given in Section 4.3.

The mixers were further grouped into their country of origin, the results of this initial grouping is shown in Table 2. This table gives a complete list of manufacturers/machine considered in the survey.

Each of the mixers in this table has been allocated a file number, the reason for this will become evident.

3.3.2 Feature Grouping

In considering the listed features of each mixing machine, the five points listed below would summarize the mixer.

1. Nominal capaciety Litres
2. Power consumed H.P./kW
3. Cost £

LIST OF MANUFACTURERS			
FILE No	NAME	TYPE	COUNTRY
1	LINER	CUMFLOW	U.K.
2	HOWARD	PLANITARY	U.K.
3	WINGET	TURBINE	U.K.
4	BENFORD	TURBINE	U.K.
5	ROCK	TURBINE	FRANCE
6	COUVROT LAINE	PLANITARY	FRANCE
7	PATAUD	TURBINE	FRANCE
8	PATAUD	TURBINE	FRANCE
9	PRASCHAK	TURBINE	U.S.A.
10	DUNN		U.S.A.
11	LANCASTER	COUNTERCURRENT	U.S.A.
12	TEKA	TURBINE	GERMANY
13	EIRICH	COUNTERCURRENT	GERMANY
14	THOMAS SCHMIDT	TURBINE	GERMANY
15	SCHLOSSER	PLANITARY	GERMANY
16	ZYKLOS	COUNTERCURRENT	GERMANY
17	LIEBHERR	TURBINE	GERMANY
18	LOREV	PLANITARY	ITALY
19	LOREV	TURBINE	ITALY
20	SANDBY	COUNTERCURRENT	SWEDEN
21	HUGGLER SUHR	PLANITARY	SWISS
22	HILAC	PLANITARY	DENMARK
23	DAMMAN-CROES	PLANITARY	
24	MACHINOEXPORT	TURBINE	U.S.S.R.
25	spare		
26	spare		
27	spare		
28	STOTHERT & PIT	PADDLE	U.K.
29	TRIANCO	PADDLE	U.K.
30	ROSSBETON	PADDLE	ITALY
31	LOREV	PADDLE	ITALY
32	SANDBY	PADDLE	SWEDEN
33	spare		
34	spare		
35	spare		

Table 2

36	PRASCHAK	SPIRAL BLADE	U.S.A.
37	PRASCHAK	SPIRAL BLADE	U.S.A.
38	STEARNS	SPIRAL BLADE	U.S.A.
40	spare		
41	spare		
42	spare		
43	LINER	REVERSING DRUM	U.K.
44	WINGET	REVERSING DRUM	U.K.
45	BENFORD	REVERSING DRUM	U.K.
46	ROCK	REVERSING DRUM	FRANCE
47	MULDER	REVERSING DRUM	FRANCE
48	MANUBAT PINGON	REVERSING DRUM	FRANCE
49	RICHIER (FORD)	REVERSING DRUM	FRANCE
50	ELBA	REVERSING DRUM	GERMANY
51	SETTER	REVERSING DRUM	GERMANY
52	VITO	REVERSING DRUM	ITALY
53	LOIRE	REVERSING DRUM	ITALY
54	BETONIERA	REVERSING DRUM	ITALY
55	L'EUROPEA	REVERSING DRUM	ITALY
56	ROSSBETON	REVERSING DRUM	ITALY
57	HUGGLER SUHR	REVERSING DRUM	SWISS
58	HUGGLER SUHR	REVERSING DRUM	SWISS
59	HILAC	REVERSING DRUM	DENMARK
60	spare		
61	spare		
62	spare		
63	COMPACTORS S.G.M.E.	SPLIT DRUM	U.K.
64	ERIE	TILTING DRUM	U.S.A.
65	SMITH	TILTING DRUM	U.S.A.
66	LORO & PARISINI	TILTING DRUM	ITALY

Table 2

4. Weight kg

5. Output m^3

In order to compare the above features, a graphical method is the most satisfactory and would reveal any relationships present. The quantity of data collected amounted to 16200 items, which indicated the use of a computor plotting technique.

3.4 COMPUTER PLOTTING

The technique used to plot the available data is as follows.

1. The data is stored on a cassette type magnetic tape store, each of the mixer type/company tables being given a file number. Each of these files contain the total data in multiples of six.

2. A program was written which allowed:-

   a) Any two of the features to be selected for plotting against a chosen axis.

   b) Any of the selected file numbers to be plotted.

   c) A combination of feature data to be plotted on one axis.

   i.e. plot nominal capacity on X axis and cost divided by nominal capacity on the y axis

By using the above facilities the possible combinations of data were plotted, the ones which at this time gave the results of most practical value were those as noted below, the plots are also included.

As an initial review the distribution of the features considered are plotted against the file number or manufacturer. These plots give an overall picture of the distributions both in a particular generic grouping and within mixers as a whole.

Plot 3.1 Manufacturer Against Nominal Capacity

In this plot the general size relationship to mixer type is highlighted, in types 1 and 2 the capacities are of a similar size, in type 3 a small capacity is noted, and in type 4 a much larger batch capacity is seen. This is mainly the mixer type used in the U.S.A. where larger batches and longer mixing times would seem to dominate.

Plot 3.2 Manufacturer Against Power Consumed

In this plot the power consumption of types, 1, 2 and 4 are similar but type 3 has a much lower power consumpton.

Plot 3.3 Manufacturer Against Selling Price

This plot mainly illustrates the amount of information available on cost in particular types, but also shows that the type 3 machines are generally of lower cost.

Plot 3.4 Manufacturer Against Weight

The weight distribution again gives a fairly even spread across types 1, 2 and 3, but the type 3 machines again seem to be lighter.

Plot 3.5 Manufacturer Against Output

As would be expected the output from the larger group 4 machines lead the field, followed by types 1 and 2, and as would be expected group 3 produces less concrete.

These plots are of limited value, but do help to give an overall picture of the data available.

3.5 COMBINED PLOTTING

In the comments on plots 3.1 to 3.5 the usefulness is limited by the single variable approach, that is, the variable considered is not referenced to any other parameter. By using the program to plot the various parameters available, graphs of more value are obtained. The

plots listed below are those which appear at this time to be of most value.

Plot 3.6 Nominal Capacity Plotted Against Selling Price

A general straight line relationship underlies the scatter, the Liner and Teka plots give a less variable straight line, but it should be noted that the points do represent machines of the same type, i.e. pan mixers.

The main use of the plot in the design of new mixing plant is to allow a comparison of these designs against existing Selling Price.

Plot 3.7 Weight Plotted Against Selling Price

A general underlying trend is noted that the selling price is dependent upon weight; this is particularly true of machines weighing less than 8000 kg. The data may be used in the design of new mixing plant.

Plot 3.8 Nominal Capacity Plotted Against Weight

If the points indicating the tilting drum machines are neglected (⊕) then the relationship is that of a straight line.

Plot 3.9 Nominal Capacity Plotted Against Output

The different conversion factors used by manufacturers to give various machines advantageous outputs in comparison with its competitors are highlighted in this plot. It can be said that some of the variation may be due to the difference in the densities of the concrete considered in the specifications.

Plot 3.10 Nominal Capacity Plotted Against Power Consumed

This graph shows the variation of the power consumed against the mixing capacity of the machine, the major differences occur in the large tilting drum mixers (mainly used in the U.S.A.) where generally lower

powers are used but generally with longer mixing times. The points of comparative types of mixers (excluding the T.D.) tend to follow a straight line.

Plot 3.11 Output Plotted Against Weight

The same general points as in Plot 3.8.

Plot 3.12 Output Plotted Against Power Consumed

The same general point as in Plot 3.10.

Plot 3.13 Output Plotted Against Selling Price

The same general points as in Plot 3.6.

Plot 3.14 Output Plotted Against Selling Price/Output (European Machines)

In this plot and that of plot 3.15 the curves formed by the various machines give a good idea of the cost efficiency of the machine design. The machines shown on this plot are those which are not imported into the U.K. in any significant numbers, but are mainly manufactured in Europe.

Plot 3.15 Output Plotted Against Selling Price/Output (U.K. Machines)

The curves shown here show the machines mainly made or imported into the U.K. These form a more tightly packed distribution than those in plot 3.14. In part this could be accounted for by the difference in exchange rates between countries, but would seem to indicate a modification of price for particular markets.

The line showing the Liner range shows clearly the increased price to be paid for the smaller laboratory machine.

4.0 CONCRETE MIXING AND MIXERS

To allow an assessment of the quality of present mixing equipment it was first necessary to establish a set of criteria on which the performance of a mixing machine may be judged. In order to determine these criteria a literature search was started which covered four main areas, these being:-

1. The types of mixing equipment available and the mixing actions used in each type.
2. The theory of concrete mixing.
3. Concrete mixer testing, methods and results of tests carried out to date.
4. Methods of assessment of the performance of mixing equipment.

The results of the above areas of work are contained in the following sections.

4.1 TYPES AND ACTIONS OF MIXING EQUIPMENT

The types and actions of concrete mixing equipment may be divided into two main types. The division is made on the basis of the input/output system, this being either a batch or a continuous system.

4.1.1 Batch System

There are are present eight methods of mixing concrete in this group, the methods are broadly defined by the action used to combine the ingredients. A short description of each is given:-

a) Free Fall Mixing

The mixing is carried out in a drum which rotates about its horizontal axis, which may be inclined, the drum is fitted with a series of blades, Fig. 9. The blades pick up the material from the bottom of

the drum and then lift the mix until it falls back into the bottom of the drum where it again combines with the main part of the mix. The blades are usually so arranged that the mix has some longitudinal movement imparted to it during its rotation.

b) Forced Action Mixing

The mixing takes place in a stationary or moving pan trough or cylinder fitted with paddles or blades. The relative movement of the container and paddles forces the material to move along a large number of intersecting paths, thus providing the mixing action, Fig. 10.

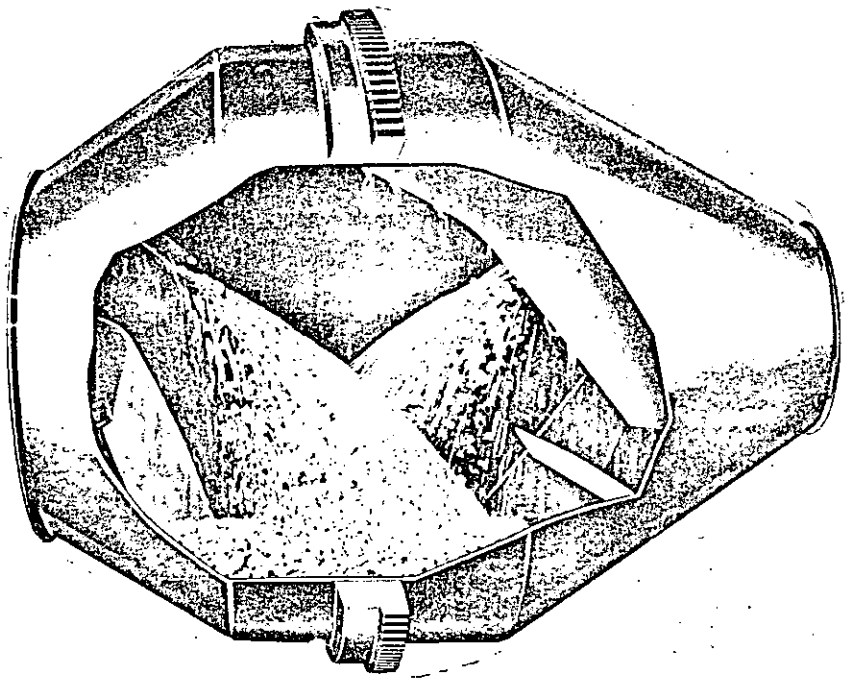

Fig. 9

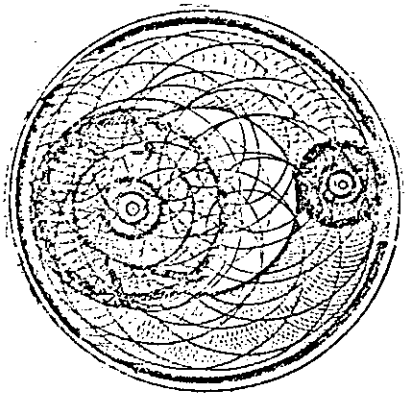

Fig. 10

c) Hand Mixing

The materials are placed on a flat surface and then moved to and fro using a shovel, hence mixing the constituents.

d) Dry Mixing

The dry ingredients are mixed, usually in a free fall or forced action mixer, and the water is added just before placing, a typical application is that of guniting.

e) Grouted Concrete

The pre-mixed aggregates are placed into the formwork and then these are bonded in place by the addition of grout.

f) Two Stage Slurry Mixing

The sand, cement and water are pre-mixed into a slurry, this is then added to the coarse aggregate in a conventional mixing action.

g) Fluidized Bed Mixing

The mix constituents are placed layer upon layer in the formwork and the mass fluidized by the use of vibration, water is then added to hydrate the cement.

h) Omni Mixer

This mixer which originates in the U.S.A. does not rely on the traditional shearing action, but uses a particle bombardment phenomenon. The mixing action is originated in the base of the machine where a wobble plate moves up and down with simple harmonic motion, the amplitude and acceleration of each point on the plate being determined by the angle of inclination and the distance from the centre of the plate (Fig. 11). This launches the mix particles in many different directions and causes a mixing action. The manufacturing company claim a mix time of 15 seconds and a mix to mix time of between 45 and 60 seconds. This mixer is as yet

not known in this country and the article from which the above information was obtained indicated that few were available in the U.S.A. (31)

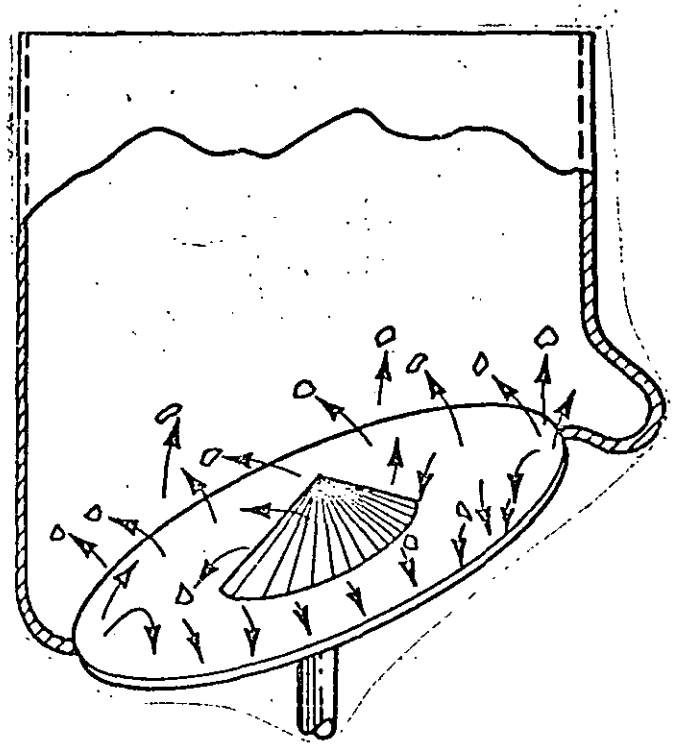

Fig. 11

4.1.2 Free Fall and Forced Action Mixing Machines

In the world wide survey most of the mixing machines depended upon a derivative of these actions. This prompted a more detailed investigation of these actions.

4.1.2.1 Free Fall Mixing

The machines in this section may be subdivided again into two types, those with tilting drums and those with non-tilting drums.

a) Tilting Drums

The tilting drum mixer is a free fall type, and is named after the discharge action used. The mixer has a single opening at one end of the drum to allow for both charging and discharging of the mix. The mixer is

charged with the opening upwards, it is then depressed to an intermediate position for mixing, and then lowered to discharge the mix. Tilting drum mixers may vary in size from the small site machines familiar in the U.K. (0.1 to 3.2 m^3) to those very large mixers used in the U.S.A., these capacities being up to 12 m^3.

b) Non-Tilting Drum

The non-tilting drum mixer usually revolves about its horizontal axis, or in the case of the Ready Mixed truck mixer, a few degrees above the vertical. The main differences in this type of mixer are the discharge methods used, these are:-

a) Pivoted discharge chute (Fig. 12)

The mix is discharged by a chute catching the concrete as it falls from the mixing blades.

b) Reversing drum - the action

The discharge is by helical blades which screw out the mix when the drum direction is reversed. (Fig. 13)

c) Split drum

The discharge is achieved by the separation of the two halves of the mixing drum. (Fig. 14)

4.1.2.2 Forced Action Mixers

The machines which come into this range may include pan, trough and continuous mixer.

The first two types are detailed below:-

Pan Mixers

The mixing actions of pan mixers are many (Fig. 15). The paddle arrangements vary, but all impart a similar action to the mix. A selection of the mixing actions in the form of loci of the tool path are shown in Fig. 16. It should be noted that in certain types of machine, a small

highly powered impeller is used to assist the mixing action (Erich call this device a whirler, Fig. 10).

Trough Mixers

Usually trough mixers have either one or two horizontal mixing shafts, these shafts fitted with the mixing blades. The dimensions of these shafts and paddles vary between mixing machine types. (32)

4.1.3 Continuous Mixers

These mixing machines do not appear from the world wide survey to have a wide use in the construction industry. There are notable exceptions, the main one would be that used by Tilcon. (33) The actions used by these machines vary, some using screw mixers and some using inclined axis paddle mixers, as is the case of Tilcon. The accuracy and quality of the mix is more susceptible to the accuracy of the batching plant than is the case in more normal concrete mixers.

4.2 THE THEORY OF CONCRETE MIXING

The investigation into this part of the subject did not reveal a great deal of information, the main problem being that the material concrete proved to present a unique mixing problem. The research carried out was not orientated to the investigation of the basic mixing action but more to the results obtained from that action. The main difference between mixing concrete and other materials, is the large size difference of the particles being mixed. The size difference ranges from less than 10 μm to more than 100 mm, this gives a ratio of more than 10^4. In addition to the size difference the distribution of the particles should be uniform within the cement/water matrix. The relative quantities of water and additives will also change the fluid characteristics of the final mix.

Fig. 12

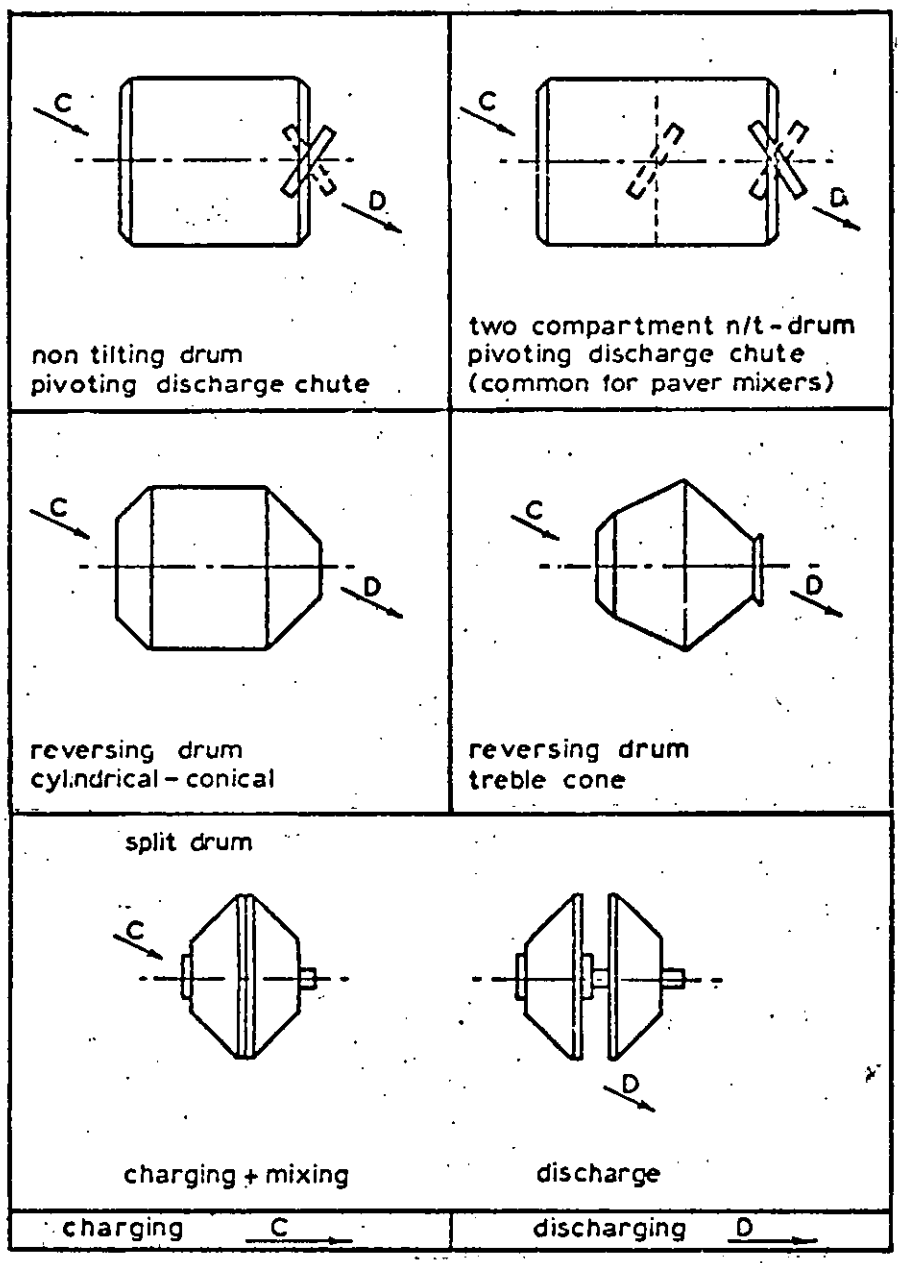

Fig. 13

Fig. 14

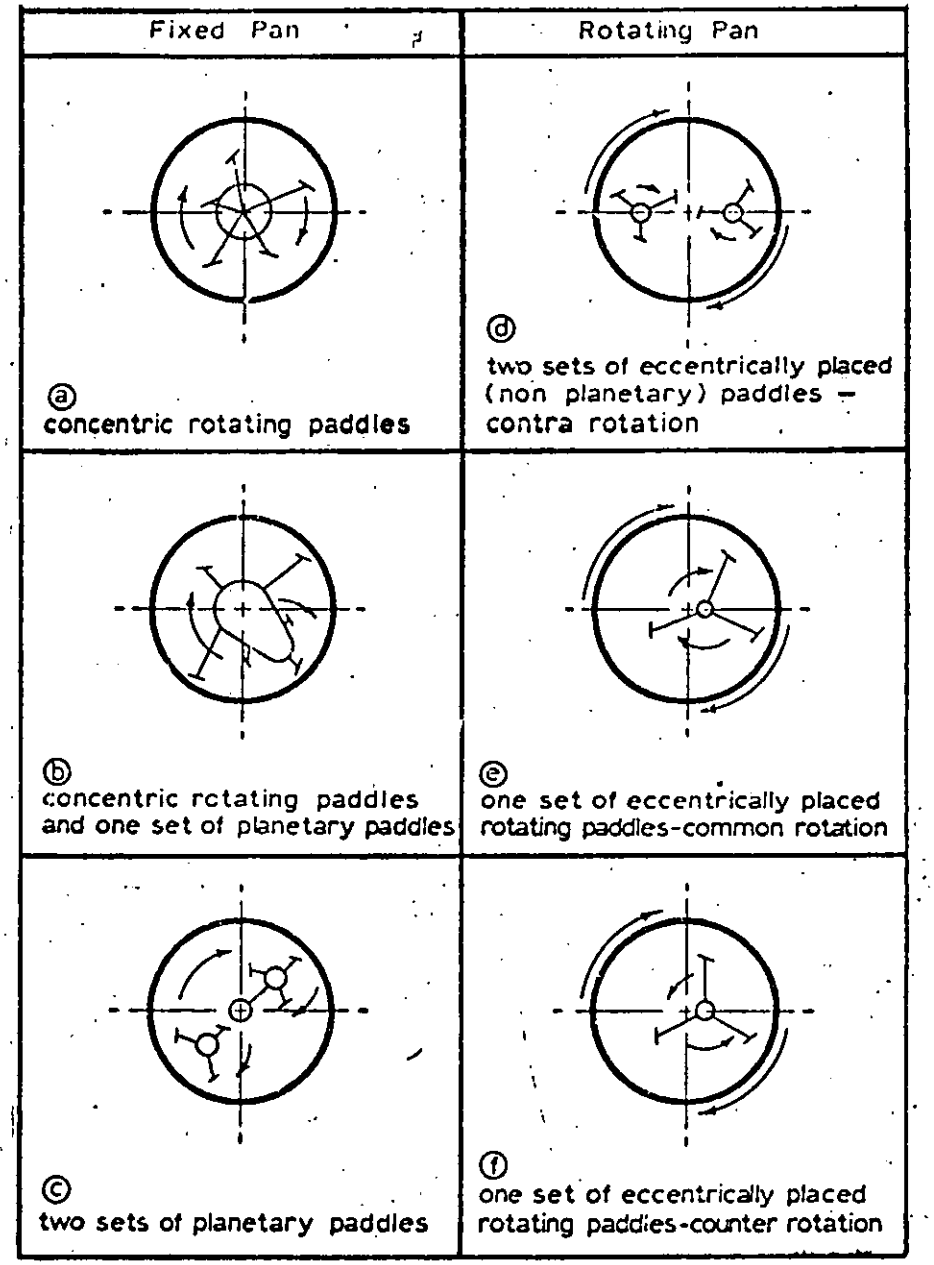

Fig. 15

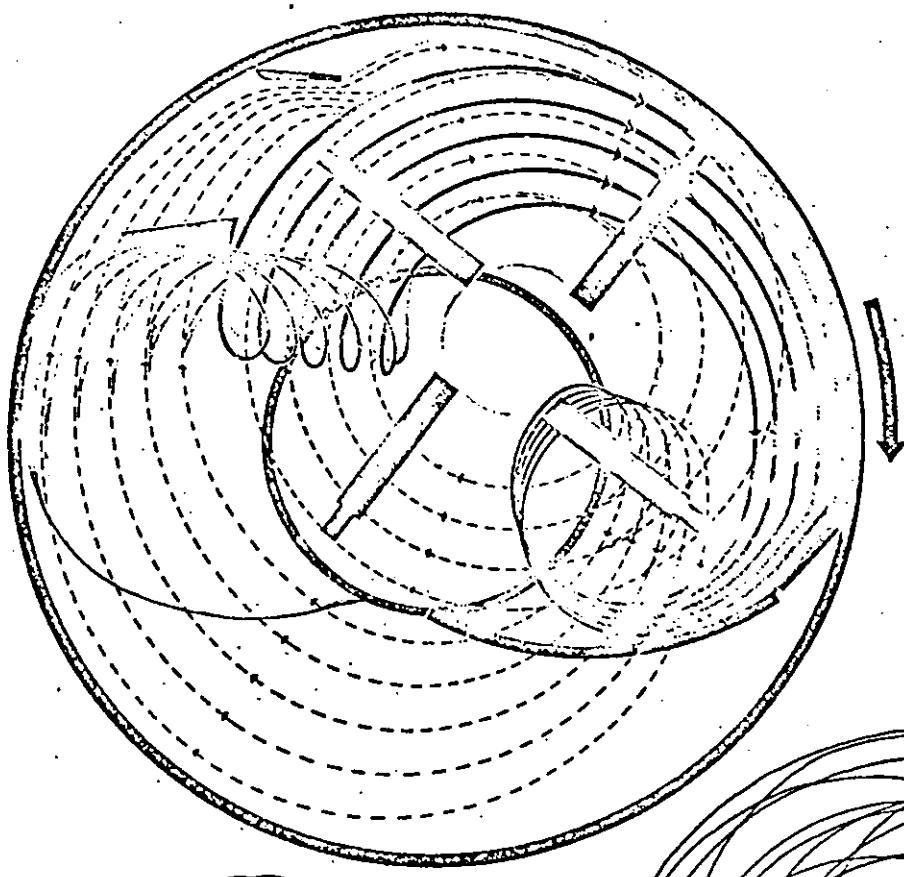

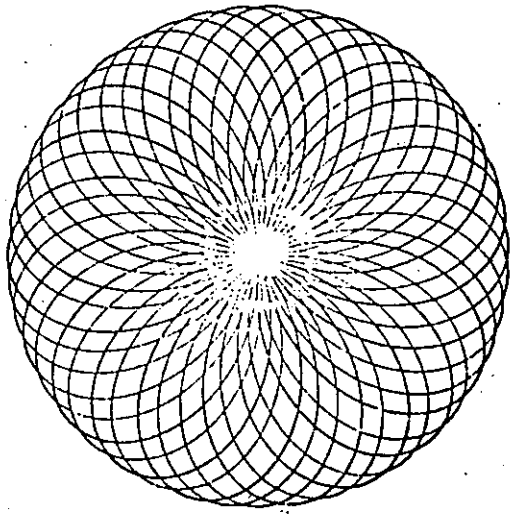

PATH OF ONE BLADE DURING
1 REVOLUTION OF THE PAN

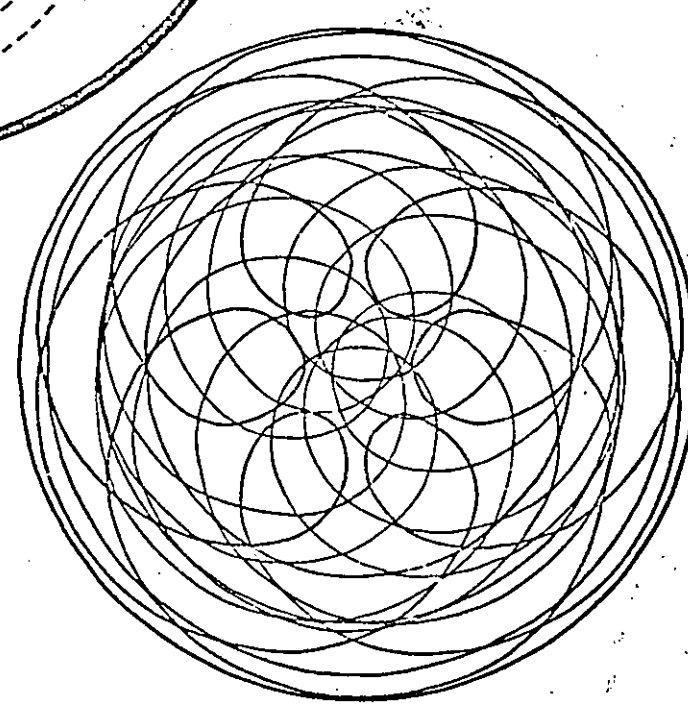

The diagram shows the path swept out by the mixing elements of a CYCLONE 2 MIXER during a single revolution of the main drive

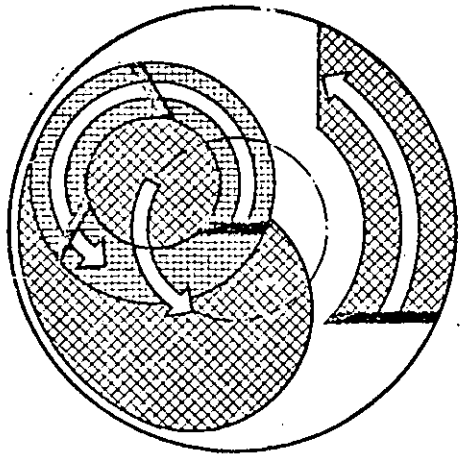

Mixer layout with one paddle unit (1)

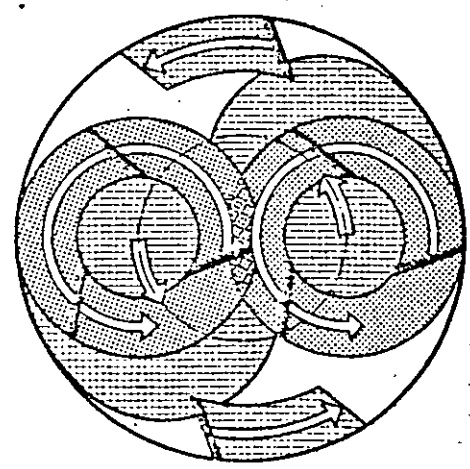

Mixer layout with two paddle units (2)

Fig. 16

The theory of mixing is not well documented, mainly it is suspected because little work has been carried out in this area. One of the main reports was that compiled by Albert Joisel (34), it tries to evolve and compose a theory for the mixing of concrete.

The report starts with a definition of the homogeneity of concrete, "A concrete is homogeneous if all the various samples from it are of the same composition". It also includes a method for fixing the size of samples needed for testing.

This is followed by the theory for the mixing of concrete and criteria for mixing ability he suggests, "the ease, speed and uniformity with which it mixes the material to and fro along the axis of rotation".

It is not proposed to review any of this work in detail, but the main references found are (35, 36) from these works; in particular (36) which contains a survey of most of the research carried out. Details of the present available theory can be seen.

4.3 METHODS OF ASSESSMENT OF THE PERFORMANCE OF CONCRETE MIXING EQUIPMENT

The performance of concrete mixing machines may be quantified under a number of headings. These are listed below:-

a) Mix quality

b) Range of mixes

c) Speed of mixing

d) Time of mixing

e) Batch size

f) Power consumed

g) Cleanliness of discharge

h) Damage to mix

i) Damage to mixer

j) Compressive strength of cured concrete

k) Labour costs

l) Ease of charging

m) Ease of maintenance

n) Output.

This list is not exhaustive, nor are the qualities in any particular order of importance. To clarify each parameter, a discussion of each is given:-

4.3.1 Mix Quality

The main problem in this area of mix quality is in finding a suitable way of defining a good or uniform mix.

The methods usually used are those of measuring the variations in one or more of the following:-

a) The composition of fresh concrete.

b) The properties of fresh concrete.

c) The properties of hardened concrete.

d) Other methods.

a) The Composition of Fresh Concrete

This would appear to be the best method to assess the performance of a mixing machine. For this to be so, a reliable sampling method is needed backed by a convenient and accurate method of analysis.

In the U.K. a British Standard has been compiled to cover the testing of concrete mixers (37). This standard utilises a further British Standard for the analysis of fresh concrete (38). The performance is assessed by obtaining values of the standard deviations of the cement, water and fine aggregate contents from the tests made on the second, third and fourth batches in a series. Four different mixes are available and the selection of each mix depends upon the type of machine being

tested. The acceptability of the mixer may be assessed by comparison with specified limiting values, the values depend upon the type of mixer being considered. (37)

The method of fresh concrete analysis used in this standard does not easily lend itself to use on site and has other disadvantages (see Section 6).

b) The Properties of Fresh Concrete

It is possible to assess the uniformity of mixing by measuring the variation in the concrete's workability. This is in fact used by some manufacturers as a mix state indicator and is achieved by measuring the power input to the mixing machine. The main problem with using workability is its interdependence not only on the degree of mixedness but also upon the composition of the concrete, the same problem is also evident if the variation in the density of concrete is used.

These methods are used in the U.S.A. (39, 40, 41 & 42), but are mainly used for the acceptance testing of ready mixed concrete the methods are based on slump tests.

c) The Properties of Hardened Concrete

The properties of hardened concrete in this case usually means the compressive strength. This has been the most popular method used in the past and is still used as a secondary indicator. The primary reason for its slip from popularity is that it is not sensitive enough to isolate the effect of the mixer against all the other variables present in different concretes. This would not necessarily be the case if strict control were maintained over the variables. Secondly, the actual testing takes a relatively long time to carry out, and requires special equipment, accurate keeping of records, and is hence costly and the results are not generally available for some days after the testing.

d) Other Methods

Other methods have been developed to try and obtain simple means of assessing the uniformity of concrete. These include introducing tracer materials, using luminescent paint and irradiated powder.

4.3.2 Range of Mixes

The mixer must be capable of handling a range of mixes. These should include any new developments which give rise to new or special mixing problems. The present specifications for mixer testing in the U.K. and Germany do include this requirement.

4.3.3 Speed of Mixing

The speed of mixing may in some cases have an adverse effect on the quality of the final mix, as a too fast drum speed may cause segregation due to the centrifugal force pushing the large aggregates to the outside of the mix. Excessive speed may also cause increased wear on the mixers moving parts.

4.3.4 Time of Mixing

In order to maximize the output of a concrete mixer, it is necessary to obtain the minimum mixing time consistent with the production of concrete at the required specification having particular regard to strength and workability. The recommended times for machines vary from 30 seconds to 5 minutes or more, but this again depends upon the type of mix and machine used.

4.3.5 Batch Size

The actual size of the batch mixed in a particular machine, compared with that for which it was designed, may adversely affect the final mix quality. That is to say, any under or overloading can be detrimental, so

ideally the machine should have a wide batch tolerance. The free fall type of mixer is more susceptible to this problem than the forced action type.

4.3.6 Energy Consumed

The energy consumed by a mixing machine has an impact on virtually all areas of the mixing. Initially the ever-increasing cost of energy highlighted by the increase in oil prices is the most obvious area where minimum energy requirements would score. But obviously the need for small and less expensive prime movers will reduce the initial product cost not only by a reduction in prime costs, but also in the cost of mounting structures, gear-boxes etc. The points noted in Sections 4.3.8 and 4.3.9 are also valid reasons for reducing the power requirements.

4.3.7 Cleanliness of Discharge

It is important that all of one batch be completely discharged before the introduction of another. This is particularly true when a different mix is being used. This problem can be a serious fault in the case of free fall mixers, but depends mainly upon the type of mix being used. The Road Research Laboratory carried out a series of tests on a drum mixer and found that the concrete retained rose to 70% of the batch weight after 18 batches. There was a tendency for the finer particles to be retained, hence the concrete discharged had an excess of coarse material (43). The forced action mixer should be less prone to this problem, but the correct design of the scraper and mixing blades play a large part in the reduction of residue material.

4.3.8 Damage to Mix

If high powers are used in mixing concrete it is thought that the mixing action will grind the various particle shapes and hence reduce

the keying properties of the sharp edged aggregates.

4.3.9 Damage to Mixer

If high powers are used in the mixing this will cause higher wear rates both in the mixing pan or drum and paddles, also in the drive chain.

4.3.10 Compressive Strength of Cured Concrete

The use of the compressive strength as an indicator of performance in mixing equipment has been used in the past, see Section 4.3.1 (c). It should also be noted that most concretes are still specified by reference to compressive strength and this being so, it would seem reasonable to use this as a criteria for mixer performance. If the ingredients are held constant throughout the testing, then the variability will be removed, hence showing the mixers relative performance, this, allied to the data on ingredient distribution, would give a better indication of the overall mixer performance.

4.3.11 Labour Costs

To minimize the unit cost of concrete, the labour costs should be kept to a minimum. This applies not only to the mixer driving, but to maintenance as well. In much plant in use today, the operation of cleaning the mixing bowl and blades is difficult and time consuming, particularly if batch production is spasmodic.

4.3.12 Ease of Charging

The performance of the mixer should not be affected by any changes in charging sequence. At present this is particularly true of free fall machines and often definite instructions are included with the machine. One case of particular note is that of the Ready Mixed concrete truck, where the charge sequence has a marked effect on mixing efficiency.

4.3.13 Ease of Maintenance

The maintenance of mixing plant should be minimal and as simple as possible. This is particularly true of the cleaning down procedures (see 4.3.11). Ideally there should be no day to day maintenance as in most plants it is not carried out. The mixing section should be easy to clean and replace, access should be good.

4.3.14 Output

This is usually expressed as the quantity of concrete produced per hour, and should be viewed in the light of actual concrete produced, as most plants tend to overestimate. It is often true that the output is more controlled by the batching equipment on one hand than the ability to handle the mixed concrete on the other.

4.4. CONCRETE MIXER TESTING METHODS AND RESULTS OF TESTS CARRIED OUT TO DATE

Standard methods for the evaluation of concrete mixers which take into account the mix type are only available in the U.K. (37) and Germany (44). At this time little information is available on the results from these tests, in fact some doubt has been cast upon the workability of the U.K. system of testing. See Section 6, 4.3 (a) and 4.4.1.

As to results of previous tests, the literature search revealed a number of these (35, 45, 46, 47, 48, 36, 49 and 50), which were of most relevance. The introduction to the report (36) sums op the difficulties of carrying out and then comparing the results of tests on concrete mixing machines. This introduction is now quoted in full.

> "A perusal of the reports on the many series of experiments with concrete mixings, beginning before 1900, clearly shows the difficulties in procuring comparable results within the domain

of research where so many factors are involved. The concrete materials, the mixers and the conditions under which the experiments were carried out differed from place to place, and at the same time the experiments were done partly as purely scientific laboratory research, partly as a commercial investigation made by contractors, or as co-operative experiments in connection with great building undertaken in concrete.

A desire to master the many sided material called concrete, to produce concrete that is uniform and of high quality as possible, has been the basis of the experiments, but as yet no criterion has been fully agreed with regard to the uniformity of concrete. Concrete quality can be judged from so many of its properties that naturally concrete research has a many sided character."

The above statement is still very true today, although advances have been made it has become obvious that the specification of concrete testing is still far from satisfactory.

4.4.1 Concrete Testing Methods

The sponsoring company had a series of mixer tests carried out in 1969 (49) at an early stage these reports were studied. It was noted that the testing authority had encountered problems in using the British Standard specification methods. The main problem was that of analysing one of the specified mixes, this mix contained a larger aggregate than any of the other mixes specified, this combined with being a more fluid mix made the sampling and analysis more difficult. The mixer in fact proved satisfactory when mixing other specified concretes, but was unacceptable with the more difficult mix.

Consultation with the compilers of the British Standard did not yield any useful comment, so the testing authority decided to modify the technique, these modifications consisted of:-

a) Using a specially prepared coarse aggregate with a minimum of large (40 mm) material.

b) Using larger 5 - 6 kg individual samples.

c) Doubling the number of samples.

By adopting the modified methods, the results came within the required sampling limits, but did cause other modifications to be carried out to the specified test program, the main alteration being the extension of the analysis time per mix from one day to three days.

These results did cast doubt on the British Standard but at this stage and with the modifications noted it appeared to give satisfactory results.

4.4.2 Resume of Concrete Testing

From the reports noted in the introduction, the most recent and relevant was that by Arne Johansson (35), a brief resume of the methods he used is given below. The results he obtained was a distillation of most of the work carried out to date, and effectively gave the best guidance on present techniques.

The tests were aimed at reducing the minimum mixing time, in Sweden, from the 1½ minutes, and to evolve a suitable method of standard testing for concrete mixers.

In the introduction a brief discussion of reasons for the tests is followed by a list of previously used criteria for mixer testing. These were consistency, unit weight of concrete, unit weight of air free mortar, air content, content of coarse and fine aggregate, cement content, water content and compressive strength. The point is made that the most sought after property is strength, and determination of its variation would seem to be the most logical parameter, but is costly and is subject to scatter in the results, hence the determination of variations in cement and

aggregate contents has gained greatest favour.

In the second chapter, the report deals with the Theoretical Considerations. From these considerations he adopted the following criteria for his investigation:

1) Distribution of cement content within a batch.
2) Distribution of fine aggregate within a batch.
3) Distribution of coarse aggregate within a batch.
4) Variations in compressive strength within a batch.
5) Change in compressive strength with increased mixing time.
6) Change in consistency with increased mixing time.

A theoretical relationship between standard deviation and mixing time was also noted and by using the formula obtained a curve as shown in Fig. 17 was derived.

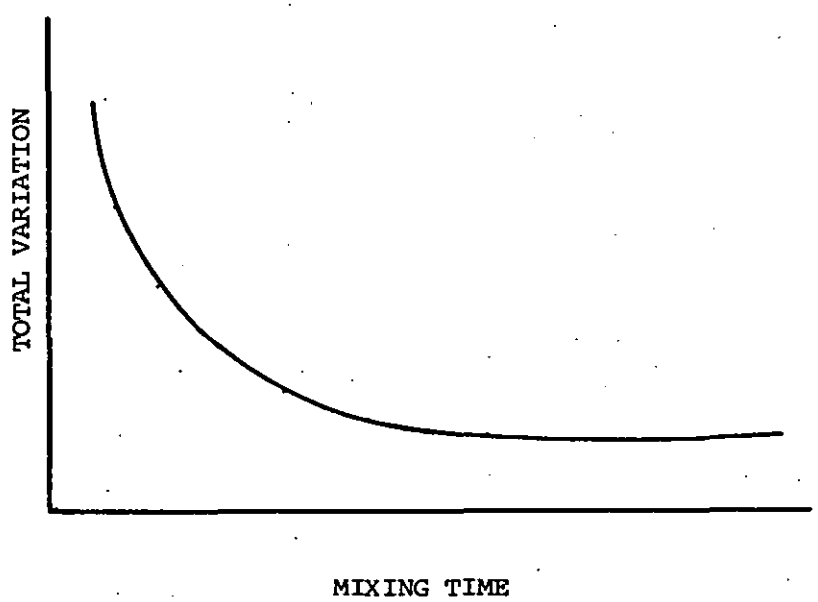

Fig. 17

$$\delta^2_{tot} = \frac{1}{a^t} \quad \delta^2_{fill} + \delta^2_{layer} + \delta^2_{dis} + \delta^2_{meas}$$

The third chapter deals with the variables present in the tests, these were:-

1) Mix analysis.

2) Order of charging ingredients.

3) Batch size, actual in relation to nominal.

4) Wear of mixer.

5) Cleanliness of mixer.

It was concluded that whilst the above effects cannot be discounted, the optimum design of testing procedures can minimise their effect.

In these tests the mix was also a variable as three different types of mix were used.

Chapter 4 considers the types of mixing machines used, these were three in number, and were:-

1) Horizontal type 1500 litre batch size (Pan Type).

2) Gravity type 2500 litre batch size (Reversing Drum).

3) Horizontal type 150 litre batch Size (Pan Type).

A description of the mixer included the method of charging and discharge and also gives details of the mixing times.

Chapter 5 deals with the measuring methods used, this includes the method of sampling the concrete as it is discharged, a carousel arrangement was used, where the sample boxes passed through the discharge by this means eight samples were collected.

A consideration of the mix analysis method to be used was also given, the method considered went from chemical analysis through aerometer, centrifuging, absorption pycnometer to radioactive trace elements. The final method chosen was that of the pycnometer + wet screening.

NOTE: This method is very similar to that contained in the British Standard (38).

The method adopted in the calculation of the scatter from the eight sub-results obtained in each sequence was:-

Mean value $\bar{x} = \frac{1}{n_s} \sum_{i=1}^{n} x_i$

Standard deviation $s.d. = \frac{1}{n_s - 1} \sum_{i=1}^{n_s} (x_i - \bar{x})^2$

Coefficient of variation $v = \frac{s.d}{\bar{x}} \times 100$ %

where:- n_s = number of scores contributing to total

x = sample value

i = index of summation

$\bar{x}$ = mean of sample

s.d = standard deviation

v = coefficient of variation

To determine the strength of the cured concrete, two cubes were taken from each of the eight samples, the compressive strength was determined after 7 x 24 hours. Various additional tests were carried out these included the removal of samples from one batch of concrete at various mixing times, thus removing the batch error.

Finally, the power consumption of the mixers was considered. The mixers gave high reading at the start of mixing, and then reduced as mixing progressed. The results obtained are not detailed here, but are used in the analysis in Section 6.

Many of the remaining reports have been studied, but the methods did not add significantly to that detailed in the above work.

4.4.3 Analysis of Test Results

The type of analysis used in Ref. 32 was considered to be a good basis on which to compare mixer performance, fortunately the untreated data from the original Liner testing was also available, as was the data from most of the tests given in list of references in the previous chapter.

If this data was processed in the same way as that in Ref. 35, an indication of the comparable mixing performances of each machine would be given. It should be stated that the methods of analysis were all similar, i.e. the British Standard method. The actual values of compressive strength varied due to the differing compositions, but the overall variation with the tests was considered to be valid. In fact, the use of the coefficient of variation allowed direct comparisons.

The use of the data in this way is by no means considered perfect, but it is in absence of other data, better than no indication.

The data obtained was tabulated and processed in a way the same as that shown in detail in Section 7.11. The resulting information was transferred to a data storage file using the program developed for the storage and plotting of the market survey data.

The plots from this data are shown in Section 7.13 under the heading Data From Other Reports.

4.5 CHEMICAL MIXING

As part of the literature survey, the topic of chemical mixing was also studied, but at this point the work carried out did not seem to be particularly relevant to the mixing of concrete. Again the particle size difference of 10^4 does not usually occur in the mixing of chemicals.

A choice of mixing equipment in the chemical industry appears to be either from experience, and it is known that a particular mixer works or by a series of trials using various machines and the best compromise chosen from the test results.

The results of this survey did seem to be relevant at this stage but were noted for future reference.

4.6 ROTARY MIXING MACHINE

The company over the past few years have been developing a new concept in mixing. This machine was initially developed as a student project in the Engineering Design Centre at Loughborough University. Whilst the project was not a complete success, it had shown sufficiently promising results to indicate that further development work would be worthwhile.

A prototype of the Rotary mixing machine had been built during the project and was still in existence, but required additional development work. The machine uses the principle of a spinning disc inside a stationary wall or stator. The mix materials are thrown from the disc in an outward direction under the action of centrifugal force, and on collision with the stator, the outer layers of the mix are slowed down, this forming a toroidal motion in the mix which gives an interchange of particle position and hence a mixing action. At this stage only a very limited amount of actual operating data was available on this machine, including some data on the power of the prototype machine, which had been extrapolated to give larger machine power requirements. A simple costing exercise had also been carried out, this costing was thought to be fairly reliable, as the machine contained a small number of working parts, and as these parts are relatively simple, the cost errors would be small.

The data available was plotted on to the market information obtained in Section 3, the resulting plots are shown in Plots 4.1 and 4.2 as may be seen limiting conditions are given, depending on the hypothesis used.

In the case of Plot 4.1 Envelope I the high/low limits on cost show that the lower cost curve gives a value which compares with the present machines (Liner/Teka), but the higher curve is more expensive per litre than these machines. It should be noted that the criteria of nominal capacity does not apply as directly to the Rotary mixer, as it does to the normal types of mixing machines. The reason for this difference being the speed of mixing, at this stage in the work the actual speed was not known, but indications were that it would be at least twice as fast as present machines. This would give a comparable output from a machine having half the nominal capacity.

The Envelope II is constructed using a mixer of half the capacity, it can be seen that this compares with most of the present equipment, and is in fact less expensive than the present Liner/Teka range.

At this stage in the project the main criteria for good mixing performance was thought to be a high power input per unit volume, this was confirmed by the use of high power impellers used by various manufacturers. Hence the plots in Plot 4.2 show that the rotary mixer has a higher power input than most other mixers.

The conclusion drawn from the above was that the machine would be worth developing to a stage where more definite data was available.

4.7 LINER INFORMATION

The information available from the company was not of a type comparable with that obtained from the various test reports. For example

data was not available on the effect of mixing time on mix quality. A certain amount of data was available on the older machines (1938) but none was available on the most recent machine types. The data obtained to certify the Cumflow range in 1969 was limited due to the design of the British Standard. At this stage it was considered that an additional test program would be an advantage to the company and the project.

5.0 REVIEW OF THE PROJECT

The initial research having been completed, a review of the information obtained was carried out. The overall objective was to formulate a plan of action for the next stage of the project. The work had divided into three major areas, these being:-

1) The basic data on concrete, the methods used to design mix and transport it, also the present and likely future developments in concrete.

2) The details of competitive equipment from most part of the world; this information was collected, tabulated and presented in the form of graphical plots for use in the later design of concrete mixing plant. Consideration was also given to the new Rotary machine, this work included the production of overlays of the power and capacity data, both measured and predicted values were compared with the competitive plots.

3) The methods used to test mixing machines, these included the various forms of concrete sampling and analysis, also considered were the results available on competitive machines, methods of analysis of these results and of those available from the company, this was then plotted to allow the extent of the data to be assessed.

5.1 CONCLUSIONS

From these three areas the following conclusions were drawn:-

5.1.1 Developments of new materials and techniques in concrete would indicate the requirements for new mixing and handling methods.

5.1.2 The collected data on competitive mixing equipment provided a useful design aid for development of new mixing equipment.

5.1.3 The Rotary mixing machine, although not at this stage perfected, when compared with the plotted competitive data, did give results that lay within the acceptable areas of these curves.

5.1.4 The market information available from the company was limited and not of the type required to further the project. This indicated the need to carry out more specific marketing.

5.1.5 The testing of the company mixing machines had been limited and the data available did not indicate a very good mixing performance when compared with the competitive information. In order to correct this a new series of tests were considered necessary.

5.1.6 The company information indicated two areas of doubt. First the older data (1938) was unsupported by actual test reports and was only available in the form of a publicity booklet, second the latest testing was marred by the difficulties encountered with the sampling and testing methods.

5.2 FUTURE WORK

After consideration of these conclusions, a three pronged approach was indicated to correct the noted deficiencies.

a) The initial work was to develop the Rotary mixing machine to a condition where it produced consistently mixed concrete without the inherent instability and sealing problems, thus allowing it to take part in the test program.

b) To carry out a test program, using a representative number of mixing machines produced by the company and to include a competitive machine (Teka) and the Rotary machine. The tests were to be carried out in such a way that the results would be comparable with as much of the available data as possible.

5.3 PRESENTATION TO THE COMPANY

Having formulated the proposals for future work, a presentation of the work outlined was made to the company. The proposed direction of future work was accepted in principle, but with the following alterations.

a) The test program indicated should be widened to carry out British Standard certification on all of the current company produced mixers.

b) The testing of a competitive machine was thought to be unnecessary at this time and would cause a large amount of extra work, together with the overall difficulty of obtaining a suitable test vehicle.

c) The actual analysis of the wet concrete should be carried out by the same independent Testing Authority involved with the 1969 tests. This would give the required impartiality for the British Standard certification testing.

d) During the discussion on the performance of the Cumflow mixer some doubt was expressed as to whether the mixer was performing at the optimum pan/star speed combination, and it was decided that an investigation should also be carried out into this area.

It was agreed that a test specification should be written and then submitted to the company for comment and acceptance.

The details of this specification are given in the next chapter.

6.0 SPECIFICATION FOR TEST PROGRAM

To allow the test program to be carried out in an economic and efficient way, a specification was considered to be a prerequisite.

6.1. SPECIFICATION ISSUE 1

The initial specification was written around the requirements of the British Standard (37) "Testing the Mixing Performance of Batch Type Concrete Mixers". This was to enable the selected mixers to be certified to this standard. The mixers to be certified were:-

1) Fluiverse
2) Marshall
3) Cumflow RP 550
4) Cumflow RP 1500
5) Cumflow RP 3000

The mixers to take part in the full mixing tests were:-

1) Marshall
2) Cumflow RP 550
3) Modified Cumflow RP 550
4) Rotary.

In this final group the testing was to include the analysis of the mixes which were mixed for longer periods than those specified in the British Standard.

In addition, details of mixer speeds and power were noted, also the physical properties of mixed concrete, both in the fresh and finally in the cured state. The reason for carrying out these additional tests was so that a more valid comparison with the available data from other mixers could be studied, also to give as wide a knowledge of the comparative performance of company mixing plant as possible.

The specification included all the information required to carry out the test program, preprinted report forms were also included.

The specification was then issued to the company and to the Independent Test Authority, with a request to give a quotation for their work involvement. This quotation together with their general comments confirmed reservations that the program would take a very long time to complete and would involve the mixing and disposal of large amounts of concrete, (approximately 600 tonnes), and that the cost for the work done by the independent Test Authority alone would be in excess of £12,100. This figure proved to be much in excess of those originally estimated and the reasons for this were investigated.

The main reason for the excess was the time taken to actually carry out the analysis to B.S. 1881. The mixer testing specification calls for eight samples to be taken from each batch of concrete, and further states that no more than 30 minutes shall elapse between the discharge of one mix and the starting of the next, whilst the analysis specification states that analysis shall be commenced within two hours of the water being added to the other materials. This obviously calls for a large team of people and vast amounts of equipment as the absolute minimum time for each analysis is 30 minutes. This would indicate that the specification is "practically" impossible to carry out. The quotation from the I.T.A. did not include this sort of labour force, so the testing would still not be to the British Standard, when the problems of the analysis of Mix 4 were added, the credibility of the British Standard was somewhat in doubt.

In order to investigate this matter further, a survey of mixer test houses was carried out.

6.2 TEST HOUSE SURVEY

In order to verify the problems encountered by the I.T.A. and to qualify any solutions found, a telephone survey of the main test houses was carried out. The questions asked were:-

1) Do you find the British Standard test method satisfactory, and if not, why?
2) Is it possible to carry out the test as stated, if not, how do you modify the procedure?
3) Do you encounter problems in the analysis of Mix 4?

Six respondents were contacted, and the answers are summarized below.

1) Most did not use the B.S. test as written, but did use a modified version.
2) In general the time factor was ignored and the analysis carried out in as short a time as possible.
3) Most encountered problems with the analysis of Mix 4, some did not use Mix 4, others replaced the 40 mm diameter aggregate with the same amount of 20 mm.
4) The non use of this standard by mixer manufacturers was blamed upon the unworkable methods contained within it.

6.3 CONCLUSIONS

The following conclusions were noted:-

1) The British Standard method of analysis was:-
   a) Labour intensive.
   b) Time consuming.
   c) Susceptible to operator error.
2) The specification as written was going to need large quantities of materials, the mixing of large quantities of concrete and the final disposal of the residue after sampling.

3) The British Standard mixer tests seem to be unworkable in two ways:-

a) The Mix 4 specified does not give reliable results.

b) The time required for each mix seems "practically" impossible to achieve.

4) The reasons given in 3 may be the reason for so few mixers being certified to this British Standard.

5) The mixer tests would be exorbitantly expensive to carry out.

6) The certification obtained would be of doubtful commercial value.

6.4 CHANGES TO SPECIFICATION

At this time, two obvious changes to the specification were indicated:-

a) To delete the British Standard part of the testing, hence reducing the number of mixing machines involved.

b) To find a faster and more reliable method of mix analysis.

6.5 RAPID ANALYSIS MACHINE

In the search for a faster method of analysing the wet concrete, a machine designed and produced by Wexham Developments, a company of the Cement and Concrete Association was found. This machine, whilst primarily designed to find quickly the cement content of a sample of concrete, was able to carry out most of the analysis required by the British Standard much more quickly and accurately. The latter was mainly based upon the fact that the machine was totally automatic in operation, hence removing the variability due to hand sieving. This assertion was in fact proved during some of the test work (see reference to Sieving of Coarse Fraction Fluiverse Testing). The main objection to the use of the machine, was that it was not covered in the British Standard, thus in the strictest terms invalidating the proposed certification. With

the basic doubts as to the British Standard method and its apparent lack of use by the other manufacturers, it was considered that the program should go ahead, but that the certification phase should be left out of the program. The specification was written at this time as Issue 2. (51)

6.6 SPECIFICATION ISSUE 2

This specification was again based on the British Standard, but only in the mixes used and tolerance on the batching etc., the analysis being based upon the Rapid Analysis Machine (R.A.M.).

The range of mixing machines to be tested was also reduced to the following:-

1) Reversing Drum
2) Cumflow (Pan Type)
3) Rotary mixer
4) Modified Cumflow.

The mixing tests were started on Monday, 29th March 1978. The following part of this thesis contains the report on these mixing tests. The main report issued on 15.11.77 is available under the reference. (53)

7.0 CONCRETE MIXER TESTS

These tests were carried out on the company premises at Gateshead. The reasons for the test program are detailed in previous chapters, but a brief summary of the main objectives are given below.

a) To confirm the data collected in the 1969 series of tests.

b) To provide a quantitative assessment of the mixing qualities of the present range of mixing machines, and to obtain a ground line for the assessment of the new type of machine.

c) To carry out trials on a modified version of Liner Cumflow.

d) To develop and carry out trials on the prototype Rotary mixing machine.

e) To assess the power used in mixing of the Cumflow and Rotary mixers.

7.1 SPECIFICATION

A detailed specification was produced to enable the test program to be carried out in an efficient and economical manner. A logic diagram of the testing is shown in Fig. 18 and gives all the various parts of test program together with the paths taken by the results from each section to the final report.

The specification gives details of the purchase and storage of both aggregate and cement; also included are the methods to be used to weigh and handle these materials, the services and equipment required on the test site, together with the details of the various mixer installations and methods of operation. The types of mix, quantities of material and methods of testing the physical properties of the wet and cured concrete are given.

A section on the rebuilding, commissioning and preliminary testing of the Rotary mixing machine, and the modification of the Cumflow mixer is also included in the specification.

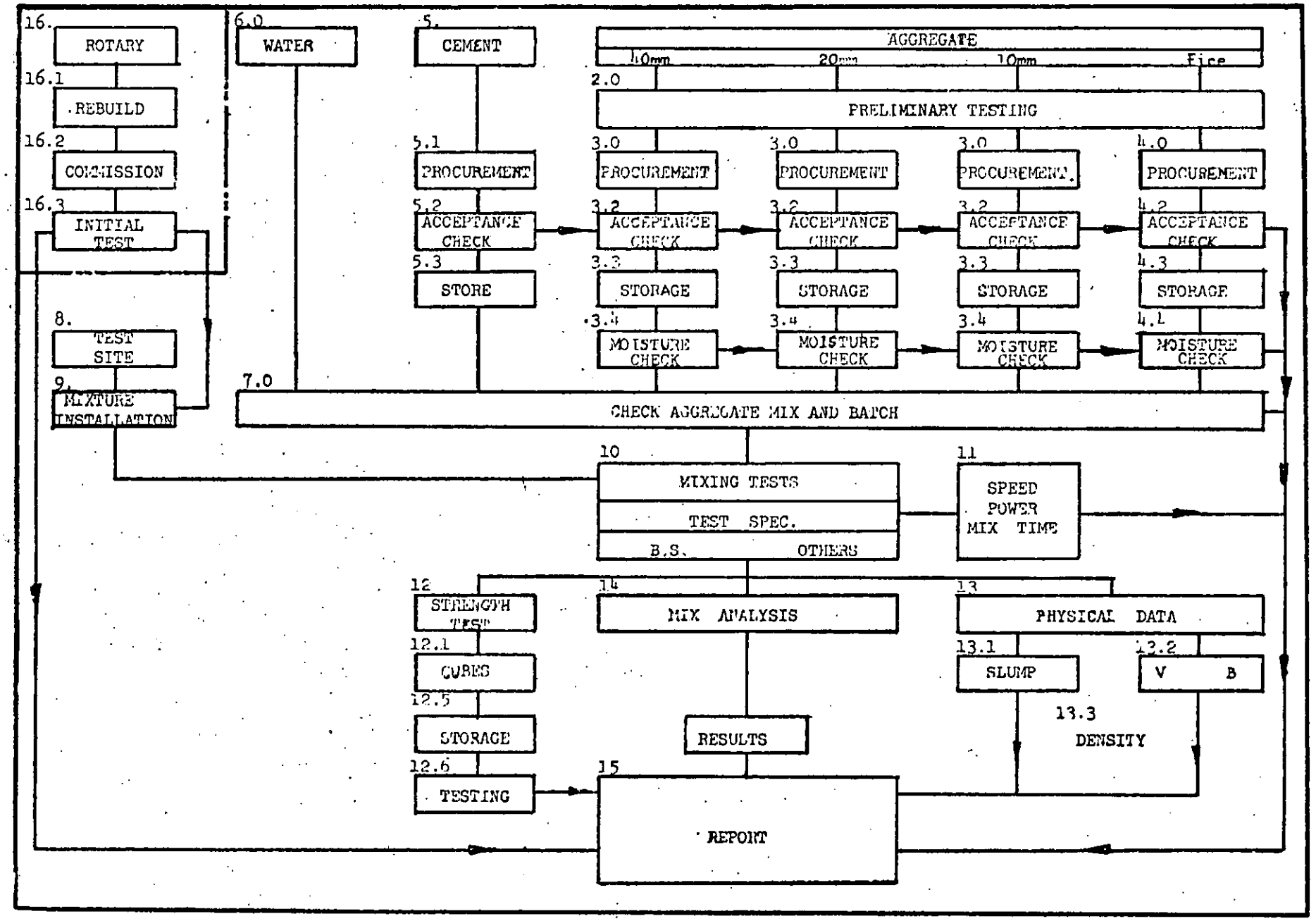
16.
ROTARY
16.1
REBUILD
16.2
COMMISSION
16.3
INITIAL TEST
8.
TEST SITE
9.
MIXTURE INSTALLATION
6.0
WATER
5.
CEMENT
AGGREGATE
40mm
20mm
10mm
Fine
2.0
PRELIMINARY TESTING
5.1
PROCUREMENT
5.2
ACCEPTANCE CHECK
5.3
STORE
3.0
PROCUREMENT
3.2
ACCEPTANCE CHECK
3.3
STORAGE
3.4
MOISTURE CHECK
4.0
PROCUREMENT
4.2
ACCEPTANCE CHECK
4.3
STORAGE
4.1
MOISTURE CHECK
7.0
CHECK AGGREGATE MIX AND BATCH
10
MIXING TESTS
TEST SPEC.
B.S.
OTHERS
11
SPEED
POWER
MIX TIME
12
STRENGTH TEST
12.1
CUBES
12.5
STORAGE
12.6
TESTING
14
MIX ANALYSIS
RESULTS
13
PHYSICAL DATA
13.1
SLUMP
13.2
V
B
13.3
DENSITY
15
REPORT

Fig 18

7.2 MIX CONSTITUENTS

The types of aggregate used in the tests were those specified in B.S. 3963, the coarse fractions used were 20 mm single size (8.0 tonnes) 10 mm single size (16.5 tonnes), the fine aggregate (16.5 tonnes) was a special sand which was free from silt, this improved the accuracy of the Rapid Analysis Machine. The cement used was Ordinary Portland Cement (10.5 tonnes).

In order to reduce the variability of all the mix constituents, they were all purchased from the same source and within as short a time scale as possible, this in the case of the aggregates would minimise the variation due to the grading machinery.

Acceptance checks were carried out on the aggregate, these consisted of sieving and moisture checks but as the coarse aggregates were purchased sometime before the start of testing, the change in moisture content was small, in the case of the sand, this was dry on delivery.

7.3 MIXER PHYSICAL DATA

The physical data for each mixing machine was checked, i.e. pan and drum speeds. The speeds on the standard mixing machines were found by putting a chalk mark on the moving part and then timing one revolution. In the case of the Rotary mixer, an inbuilt speed indication was used. The star/pan speeds on the modified Cumflow were calculated using the sprocket combinations.

The power of Cumflow was taken using a recording watt meter, Plate 7.1. In the case of the Fluiverse, which is diesel driven, no power recordings were made. The Rotary mixer power was calculated by taking the difference of the input and output pressures of the hydraulic power pack.

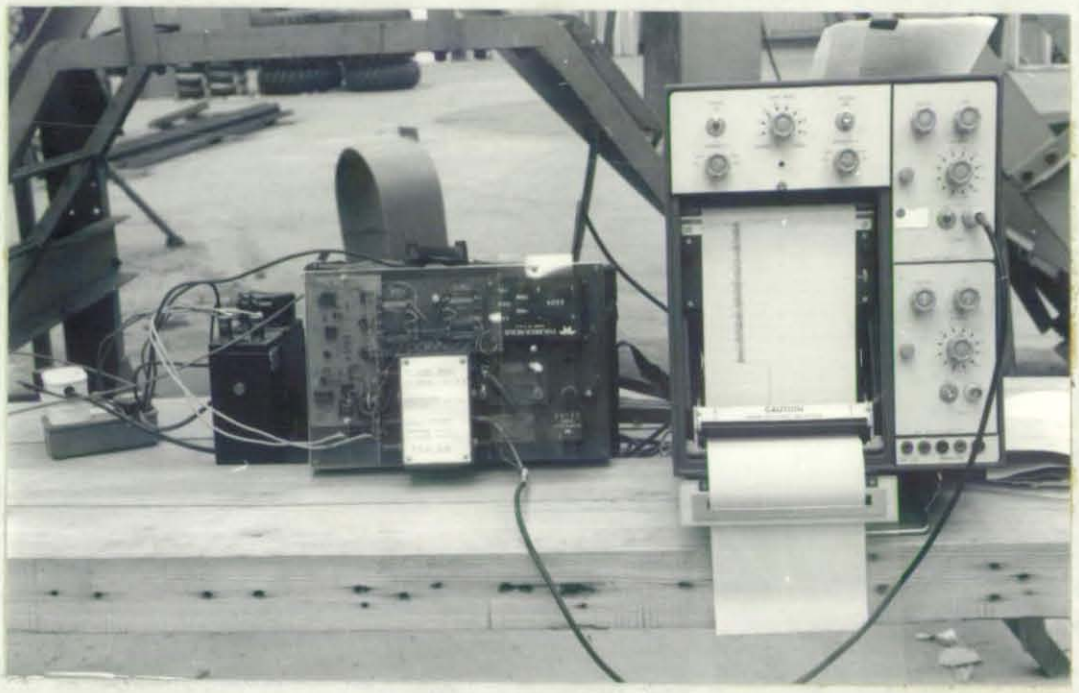

Plate 7.1

Plate 7.2

7.4 BATCHING EQUIPMENT

The solid constituents for each mix were batched up using a steel yard type scale, the ingredients were loaded into the bottom discharge skip, Plate 7.2. In the case of the large mixers it was necessary to use two skips, as the maximum capacity of the scale was not large enough to cope with the total batch quantities. These quantities were noted on the side of the bottom discharge skips as an aide-memoire for the batching team. The water was weighed on a separate steel yard using a 45 litre plastic container. Depending upon the batch size of the mixer the water was either added directly to the drum (Fluiverse) or via the standard, "Inverac" water tank in the case of the Cumflow, Plate 7.3.

7.5 CONCRETE TESTING

The testing of the mixed concrete will be considered under two headings:-

1) Fresh concrete.

2) Cured concrete.

7.5.1 Fresh Concrete

The physical properties of the fresh concrete were checked using the methods detailed in B.S. 1881.

a) Density, the density was found using a 0.01 m^3 density pot, this was filled with fresh concrete, vibrated, and then weighed hence giving the density per m^3.

b) Slump, the slump of the concrete was determined by using the standard slump cone, base and tamping rod.

The analysis of the fresh concrete was carried out in the Rapid Analysis Machine, see 7.7 and Appendix E, in essence the R.A.M. divides the concrete into its constituent parts, these are retained within the

Plate 7.3

Plate 7.4

machine, the coarse aggregate is not divided into its 20 and 10 mm sections but is retained en mass, it was thought that this should be weighed and wet sieved in order to obtain the maximum information from each sample.

7.5.2 Cured Concrete

In order to find the overall strength of the cured concrete from each mix, a corresponding cube was taken from each sample used for analysis. These cubes were manufactured in accordance with the British Standard 1881, a 150 mm cube was made using standard moulds, the concrete was compacted using a vibrating table.

The cubes were then stored in the recommended way for the first 24 hours (covered in wet sacking and then a polythene sheet). They were subsequently removed to temperature controlled water tanks for the remaining six days (Plate 7.4). After seven days the cubes were crushed on an approved testing machine at Newcastle University.

7.6 TESTING PROCEDURE

A drawing of the test site is shown in Fig. 19. The dry materials were batched using the dial scale and bottom discharge skip, the scale being tared to zero with the skip in place. The coarse aggregate 20 mm was added to the skip, followed by 10 mm. This was then discharged into the second skip, the original skip then being reloaded on the scale and the required amount of sand batched. The cement was weighed using where possible whole bags with the addition of a small amount in buckets.

The solid part of the charge was added to the Cumflow, Reversing Drum and modified Cumflow in the same way. The method used was designed to give a clean discharge from the loading hopper, and consisted of adding a small amount of coarse fraction to the bottom of the skip,

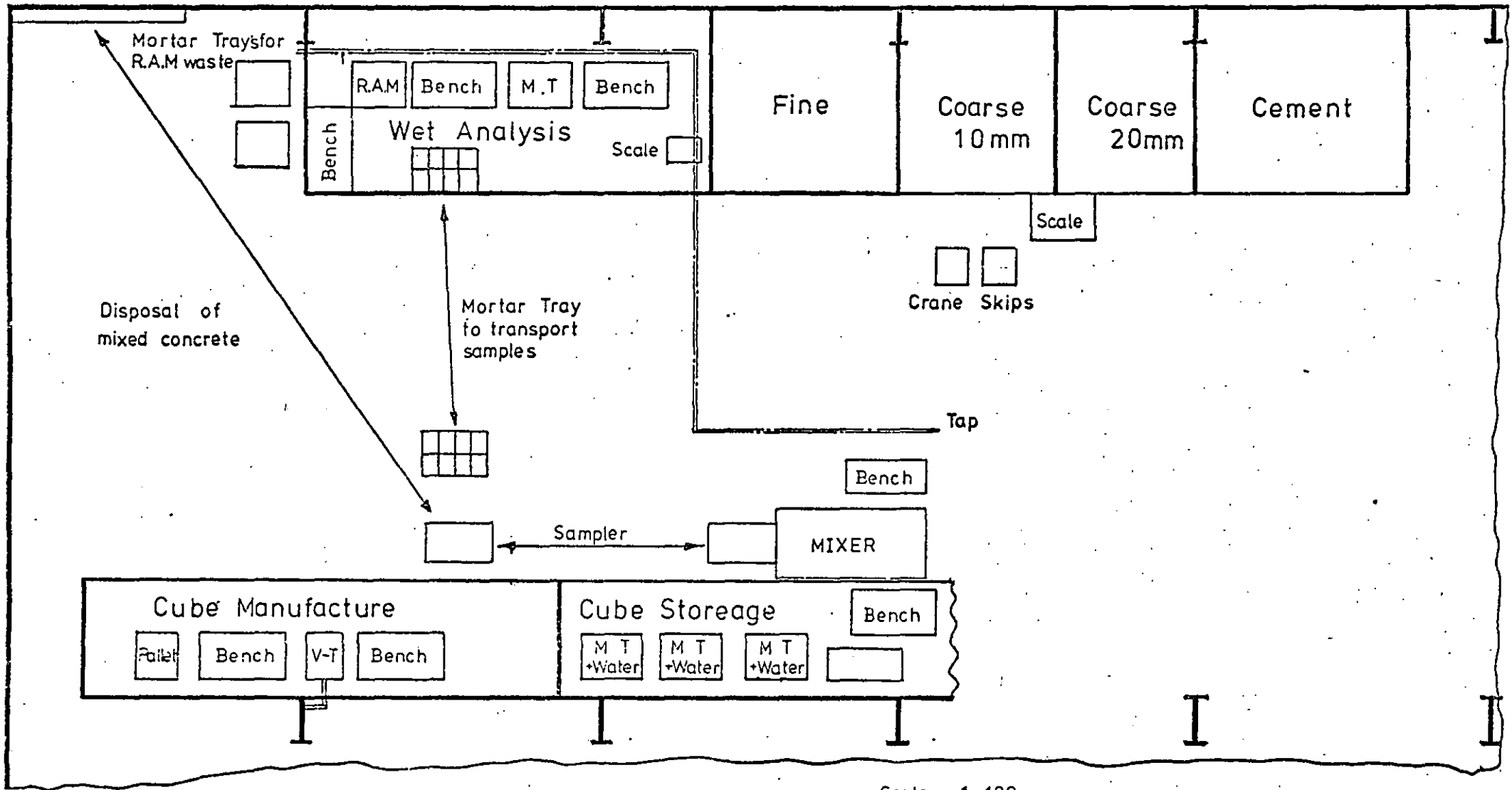

Scale 1:100
Drawn :

LAYOUT OF TEST SITE

Fig 19

Plate 7.5

Plate 7.6

followed by the cement and finally the remainder of the coarge aggregate followed by the sand. The mix was then ready for addition to the mixer.

The water was not added to all of the mixing machines in the same way. In the case of the Reversing Drum the water was added to the drum first and then the solid part added when the drum was rotating, when the mix was complete and discharged, the next batch of water was added to prevent the residial concrete "going off". The method used with the Cumflow was to add the dry materials first, followed by the water from the Inverac tank.

The mixing times used in all cases taken from the entry of the last mix ingredients, in the case of the Reversing Drum the solid fraction, in the case of the Cumflow the water. The length of mixing required was taken from the mix specification sheet.

On completion of the mixing time, the mix was discharged into the sample trolley, Plate 7.5. This trolley was designed to be used for both the Cumflow and the Reversing Drum. The trolley was filled in the upright position and was then lowered to the horizontal to allow the mix to be sampled.

The trolley was wheeled to the sampling area, the mix was then divided into eight sections, see Fig. 20, and two 8 kg samples were taken from each section. These samples were labeled AA, BB, CC etc. A second set of samples were then taken and used to make the cube test specimens, the size of these samples was not critical, these samples were identified by the letters BA, BB, BC etc., they were then transported to the cube manufacturing area.

A	B	C	D
H	G	F	E

Fig. 20

In addition two separate representative samples were taken from the mix, one was used for the slump test and the other used to check the density of the wet concrete. The remaining concrete in the sampling trolley was discharged into the dumper for disposal.

7.7 RAPID ANALYSIS MACHINE

The Rapid Analysis Machine was developed by the Cement and Concrete Association of Great Britain as a quick method of assessing the cement content of fresh concrete. Recent work undertaken in the U.K. to ensure that effective standards of site quality control of concrete are maintained, has resulted in attention being focused on the analysis of fresh concrete and the specification of a minimum cement content as a contributing factor in ensuring adequate durability. If analysis shows that cement content is below the acceptable level, the concrete can be rejected with minimum cost and delay.

The R.A.M. has the advantage of being fully automatic once loaded and can be used by a junior technician. The sample can be taken in exactly the same way as for concrete cubes and the complete operation, from loading to reading the results off a calibration graph takes only 10 minutes, with the actual operating cycle taking as little as 5 minutes.

The accuracy of the R.A.M. has been demonstrated in the laboratory where tests on a large number of machines have shown that the cement content can be measured to within 5 kg/m^3. In the field, other variables, such as the presence of silt and the method of sampling will alter the accuracy, but it is normally possible to obtain an overall accuracy within 10 - 20 kg cement per cubic metre of concrete. (See Appendix E for full description.)

7.8 TYPES OF MIX

Two types of concrete mix design were used in the test program. These mixes were based on those detailed in B.S. 3963 : 1974 but due to the use of the Rapid Analysis Machine these mixes were modified to suit this type of analysis. From the B.S. specification Mix 1 and Mix 3 were used, Mix 1 being a concrete medium cement content and high workability, Mix 3 was a concrete of high cement content and low workability.

The testing of the Rotary mixing machine was carried out at the end of the main test program. It was found that the moisture content of the aggregate had reduced from that originally tested, this was in part due to the relatively small size of the stockpiles and partly due to the aggregate being loaded and stored in bottom discharge skips for transport to the new mixing site. The original mixes batched up to the original mix proportions proved to be very stiff, and the moisture content of the coarse aggregate was checked and proved to have reduced from 3½% to ½%, the mix proportions were modified by reducing the amount of coarse aggregate and increasing the amount of water to regain the original workability.

7.9 MIXERS TESTED

The test program covers four mixers, these were:-

1. Cumflow RP 550
2. Fluiverse
3. Cumflow RP 550 (modified)
4. Rotary.

7.9.1 Cumflow RP 550

This mixer is of the pan type, Plate 7.8 using the Cumflow action. This action is when the pan and mixing star both rotate in the same

direction. (See Fig. 21 and 22.)

This mixing system has been used by the company for the last 35 years. The mixer consists of a shallow steel pan which rotates on rollers in an anti-clockwise direction at 12 rpm. Rotating within the pan is a mixing star with 3 to 5 blades, this also rotates in an anti-clockwise direction. The sides of the pan are scraped by a spring loaded scraper blade. At the end of the mixing cycle, the central discharge door is opened and the scraper blade lowered to clean the pan and ensure the complete discharge of the mix, Plate 7.6. The materials are loaded into the mixer using a batch loader, Plate 7.7. The water was added using the standard "Invarac" water tank, Plate 7.3, but this tank was filled with a weighed amount of water and then hoisted into position over the mixer to be discharged.

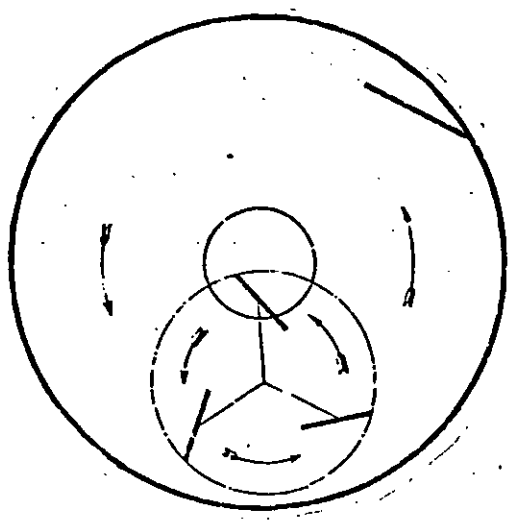

Position of star in mixing pan and direction of rotation.

Fig. 21

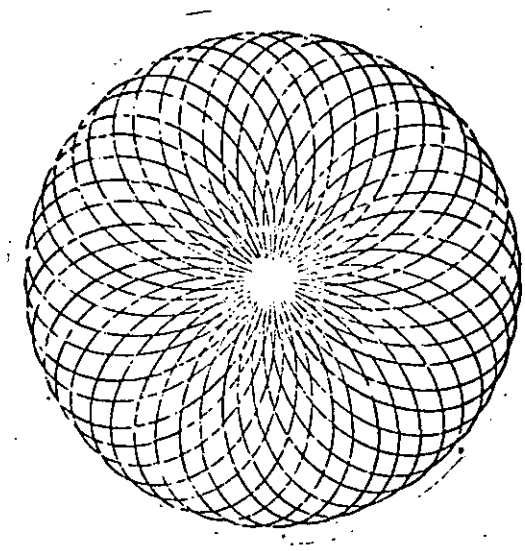

Path of one blade during one revolution of pan.

Fig. 22

Plate 7.7

Plate 7.8

7.9.2 Fluiverse

The Fluiverse mixer is of the reversing drum type, Fig. 23, that is the drum is mounted on a horizontal axis and revolves in one direction to mix the concrete and is then stopped and revolved in the reverse direction to discharge the mixed concrete. The mixing is carried out using blades in the drum, these blades carry the mix to the top of the drum and then allow it to fall under gravity. The blades also move the ingredients from one end of the drum and back again to ensure a complete enterchange within the mix. The discharge is carried out by the blades acting as an archimedian spiral and discharging the mix through the opening in the rear of the drum. The Fluiverse is charged using a lifting hopper. The hopper is lifted using a hydraulic ram. As the name implies, the drum is driven by a hydraulic motor.

7.10 TEST PROGRAM

The test programs for each mixer is shown in Fig. 24. The times selected for the Cumflow mixer were 30, 45, 60 and 90 seconds, these times were selected to give a suitable distribution around the manufacturers recommended time of 45 seconds.

Times of 45, 90, 120 and 240 seconds were used for the Reversing Drum mixer, these were estimated from the data on other mixers as no manufacturers recommendations were available.

The testing carried out on the modified Cumflow mixer was under two headings:-

a) The mixes involving the variation of pan and star speed, these tests used only Mix 3 and a standard time of 60 seconds. The star and pan speeds were varied as shown in Fig. 25. One batch was mixed for each combination.

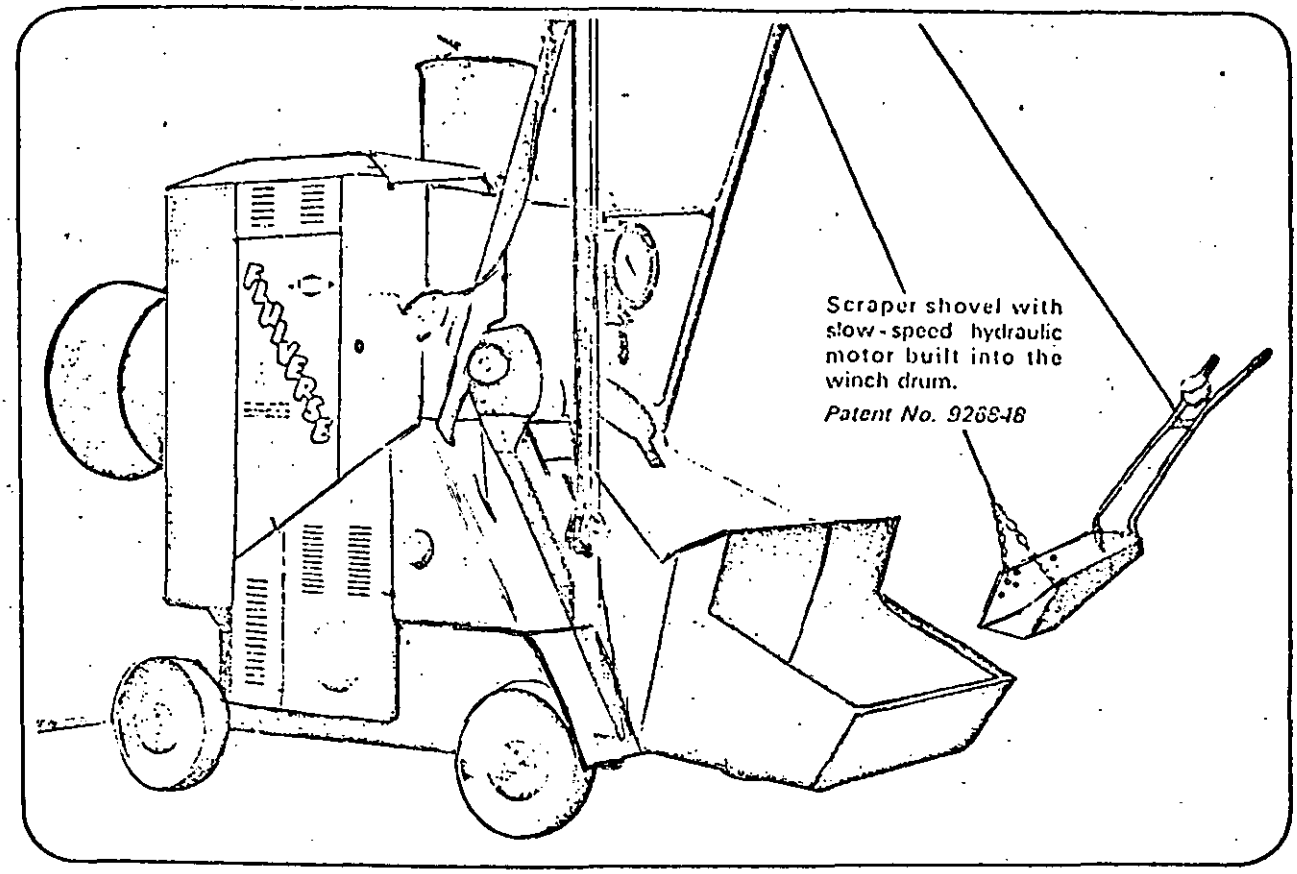

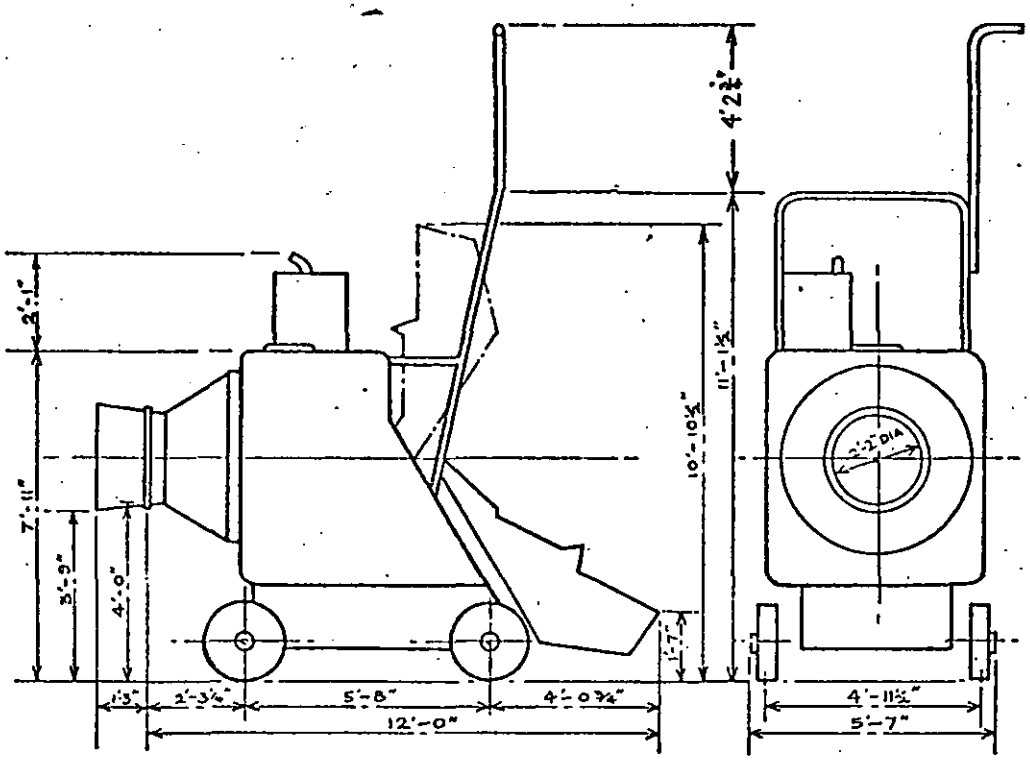

DRUM DRIVE

Hydraulic tandem pump mounted directly on the engine. Hydraulic Motor mounted directly on the spur reduction box. Easy control for reversing the Mixer Drum with a simple valve which reverses the hydraulic motor.

HOPPER

Raised, held and lowered by means of a double-acting hydraulic ram. Easy control.

MIXING DRUM

All steel drum with renewable mixing blades, capacity 10 and 14 cu. ft unmixed, 7 and 10 cu. ft. mixed, plus 10% (B.S.S. No. 1305). Driven through a high quality cast iron spur-ring. The ring also supports the drum and is carried on two rollers running on self-aligning plummer blocks.

CHASSIS

All steel chassis with Ackermann type steering giving three point suspension. Either steel wheels or pneumatic tyres can be supplied.

Fig. 23

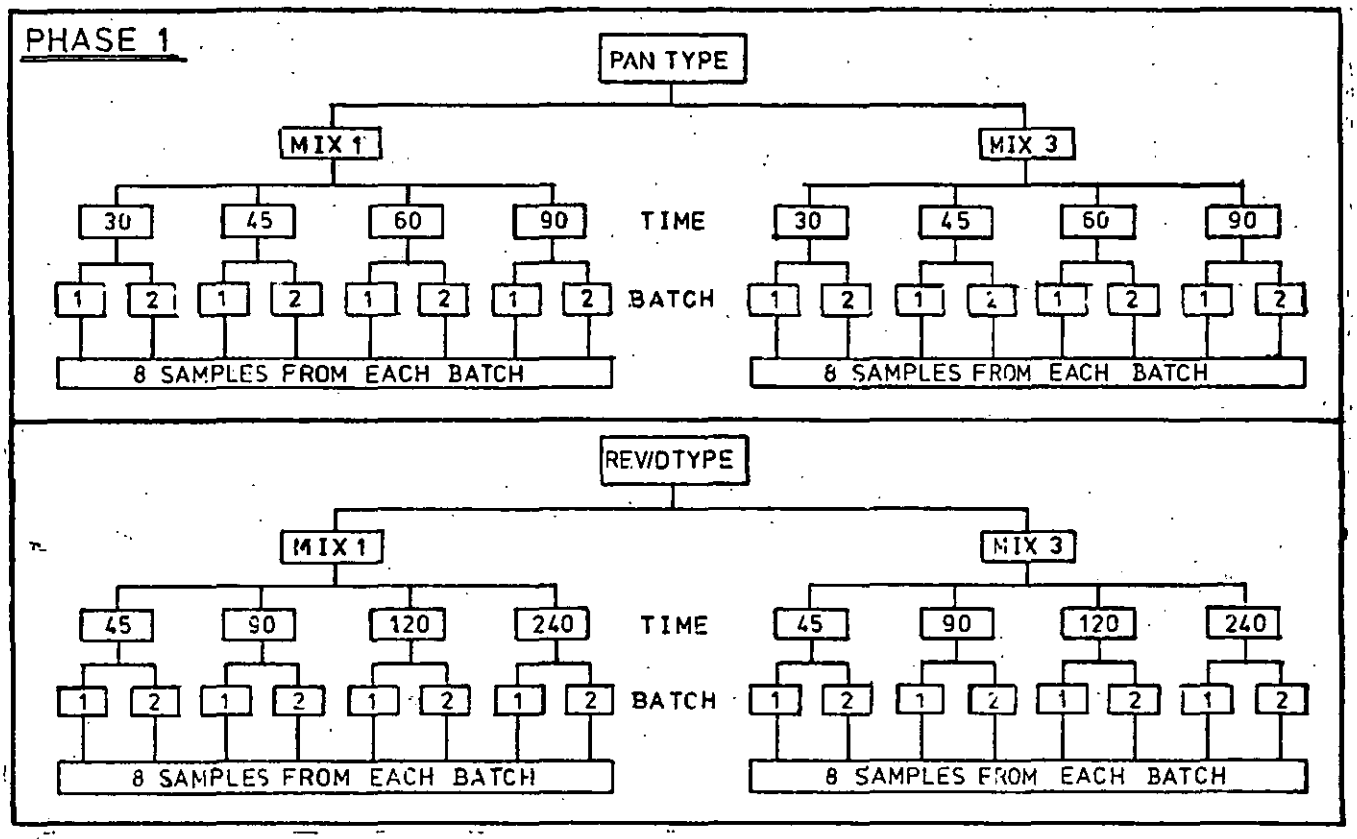
PHASE 1
PAN TYPE
MIX 1
MIX 3
30
45
60
90
TIME
1
2
BATCH
8 SAMPLES FROM EACH BATCH
REV/DTYPE
45
90
120
240

Fig. 24

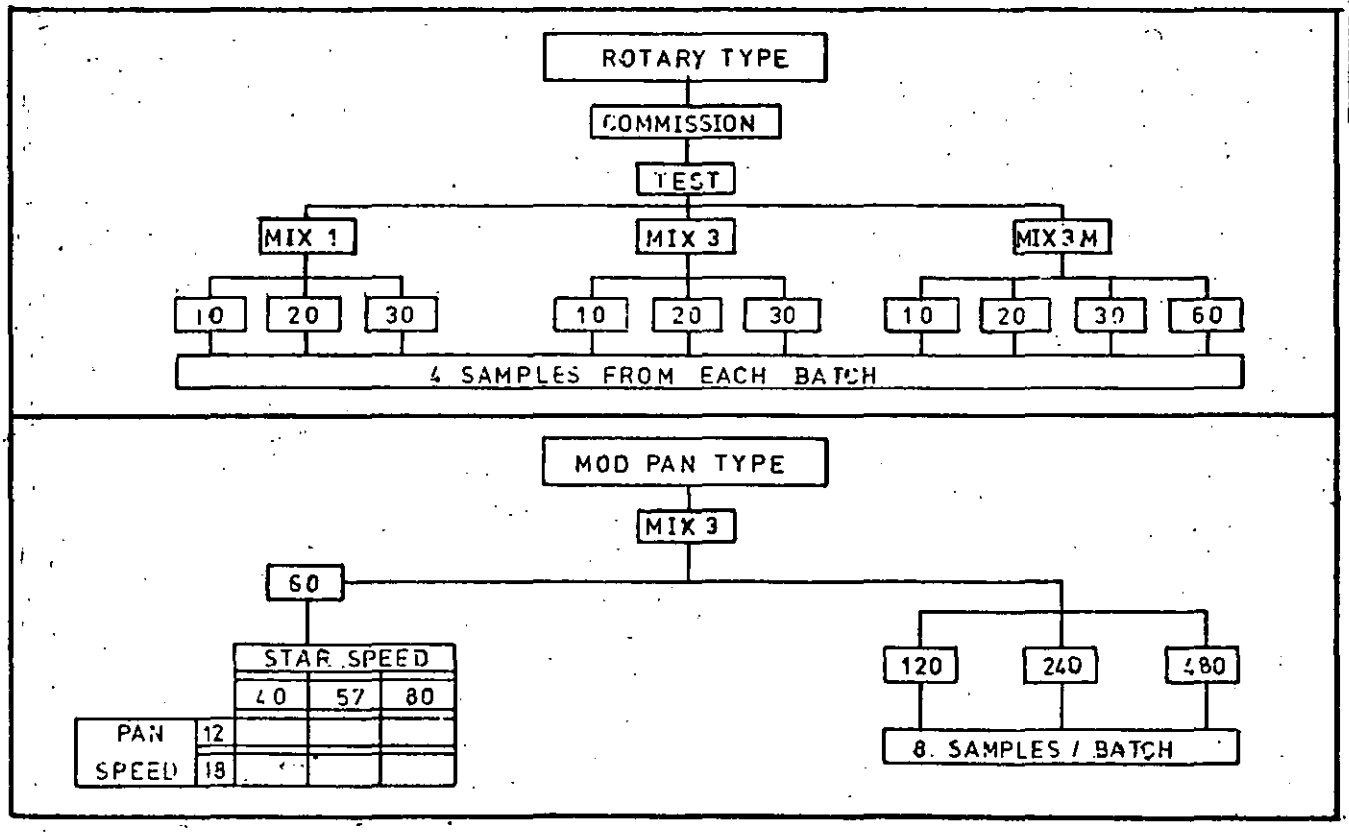
ROTARY TYPE
COMMISSION
TEST
MIX 1
MIX 3
MIX3M
10
20
30
60
4 SAMPLES FROM EACH BATCH
MOD PAN TYPE
MIX 3
60
STAR SPEED
40
57
80
PAN
SPEED
12
18
120
240
480
8. SAMPLES / BATCH

Fig. 25

MONTH	DAY	DATE	BATCH 1	BATCH 2	BATCH 3	BATCH 4	BATCH 5	BATCHES MIXED	SAMPLES ANALYSED
MARCH	M	28					ARRIVAL OF C. & C.A. RAM & OPERATOR		
	T	29							
	W	30					NEW SAND REQUIRED		
	T	31							
APRIL	F	1							
	S	2							
	S	3							
	M	4					NEW SAND DELIVERED		
	T	5	F.1.45.1	F.1.45.2	F.1.90.1			3	24
	W	6	F.1.90.2	F.1.120.1	F.1.120.2	F.1.240.1		4	32
	T	7	F.1.240.2					1	8
	F	8							
	S	9					EASTER HOLIDAY		
	S	10							
	M	11							
	T	12	F.3.45.1	F.3.45.2	F.3.90.1			3	24
	W	13	F.3.90.2	F.3.120.1	F.3.120.2			3	24
	T	14	F.3.120.3	F.3.240.1	F.3.240.2			3	24
	F	15					MACHINE CHANGE OVER TO CONFLOW		
	S	16							
	S	17							
	M	18	C.1.30.1					1	8
	T	19	C.1.30.2	C.1.45.1	C.1.45.2			2	16
	W	20	C.1.60.2	C.1.90.1	C.1.90.2	C.3.30.1		4	32
	T	21	C.3.30.2	C.3.45.1	C.3.45.2	C.3.60.1		4	32
	F	22	C.3.60.2	C.3.90.1	C.3.90.2			3	24
	S	23							
	S	24							

MONTH	DAY	DATE	BATCH 1	BATCH 2	BATCH 3	BATCH 4	BATCH 5	BATCHES MIXED	SAMPLES ANALYSED
APRIL	M	25							
	T	26			MODIFICATION OF				
	W	27			CONFLOW MIXER				
	T	28			DEVELOPMENT OF				
	F	29			ROTARY MIXER				
	S	30							
MAY	S	1							
	M	2	G.3.60.E					2	16
	T	3	G.3.60.H		G.3.60.F			2	16
	W	4	G.3.60.G	G.3.120.1				2	16
	T	5	C.3.240.1	C.3.480.1	R.3.25.1			3	24
	F	6	R.3.25.2	R.3.25.3				2	16
	S	7							
	S	8							
	M	9							
	T	10			FURTHER DEVELOPMENT OF				
	W	11			ROTARY MIXING				
	T	12			MACHINE				
	F	13							
	S	14							
	S	15							
	M	16	R.3.10.1	R.3.10.2	R.3.20.1	R.3.20.2		4	0
	T	17	R.3.30.1	R.3.30.2	R.3.M.10.1	R.3.M.20.1	R.3.M.30.1	5	20
	W	18	R.3.M.60.1	R.1.10.1	R.1.20.1	R.1.30.1	R.1.60.1	5	20
	T	19			RETURN OF RAM ETC.			0	0
	F	20							
	S	21							
	S	22							

Fig. 26

b) In order to ascertain the effect of longer mixing times on the standard Cumflow mixer, three extended times were studied, these were 120, 240 and 480 seconds, and again, only Mix 3 was considered.

In the case of the Rotary mixer, the initial test program was carried out using dry aggregates, this was then extended to use both Mix 1 and Mix 3. The length of time used for mixing was determined during the test program. The actual test program achieved is shown in Fig. 26. This indicates that an analysis time of 10 minutes per sample was consistently achieved.

7.11 MODIFICATIONS TO THE SPECIFICATION

During the coarse of the testing, certain changes were required to the methods detailed in the specification. The changes affected two main areas:-

1) Timing of the mixing.

2) Sieving of coarse fraction of aggregate.

7.11.1 Time of Mixing

Because of the different method used in charging the mixers, the method used in determining the mixing time varied between mixers. The basic method of mix timing should be from the entry of the last mix ingredient to the drum or pan, to the start of the discharge cycle. The various methods used to achieve this timing are shown in Fig. 27 (a), (b) and (c).

7.11.2 Sieving of Coarse Fraction

Mix 1: Fluiverse. The specification called for the sieving of the coarse fraction recovered from the base of the Elutiation column. This was carried out for the first tests, but the results indicated that not only

REVERSING DRUM

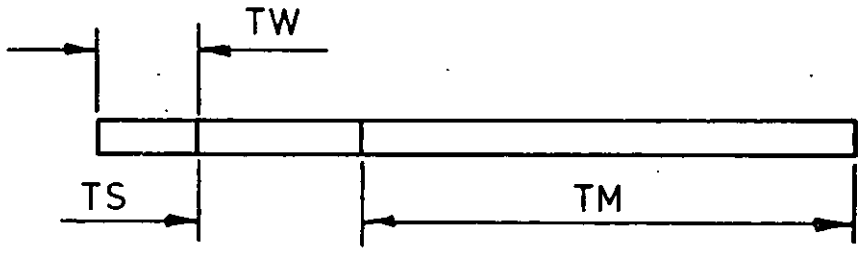

TS is the time required to introduce the solid. (S)

TW is the time required to introduce the water. (S)

TM is the time of mixing. (S)

Fig. 27 (a)

CUMFLOW

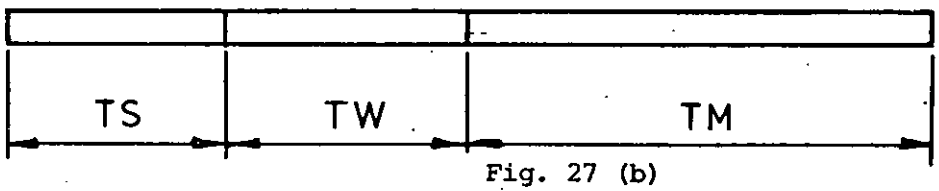

Fig. 27 (b)

ROTARY

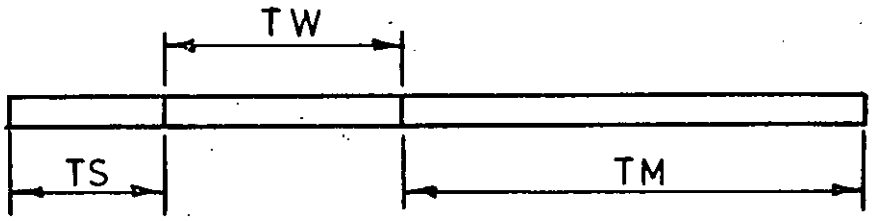

Fig. 27 (c)

was the sieving a slow process, the critical one in fact, the results were very operator sensitive.

The action of the R.A.M. was totally automatic and removed the variability so the new analysis was as follows:-

From the R.A.M. - cement content

- weight of coarse fraction
- weight of 10% fine from sieve.

One additional modification was made to the process. This was to introduce a small constant volume container. This allowed the 10% fine to be weighed on the more accurate balance. The results of these changes may be seen from the graphs of results.

The original data from the Fluiverse Mix 1 was not completely lost but is not as reliable as that obtained from the remaining mixes. NOTE: the only samples affected were those involving the 10% fine and coarse fractions.

7.12 DATA PROCESSING

A logic diagram of the data processing used on the results of the tests is shown in Fig. 28. The data was divided into three parts:-

a) Ram Data

Cement weight

Sample weight

b) Mass Data

Coarse aggregate weight

10% fine aggregate weight

c) Cube Data

Cube strength

Cube density.

This data was originally collected on the test site on the form as shown in Fig. 29. This was then fed into a specially written analysis program using the Hewlett Packard HP 9010 desk top calculator. This program filed the data on to a cassette storage system. The filed data was then retrieved by a second program which calculated the mean, standard

METHOD OF CALCULATING DATA

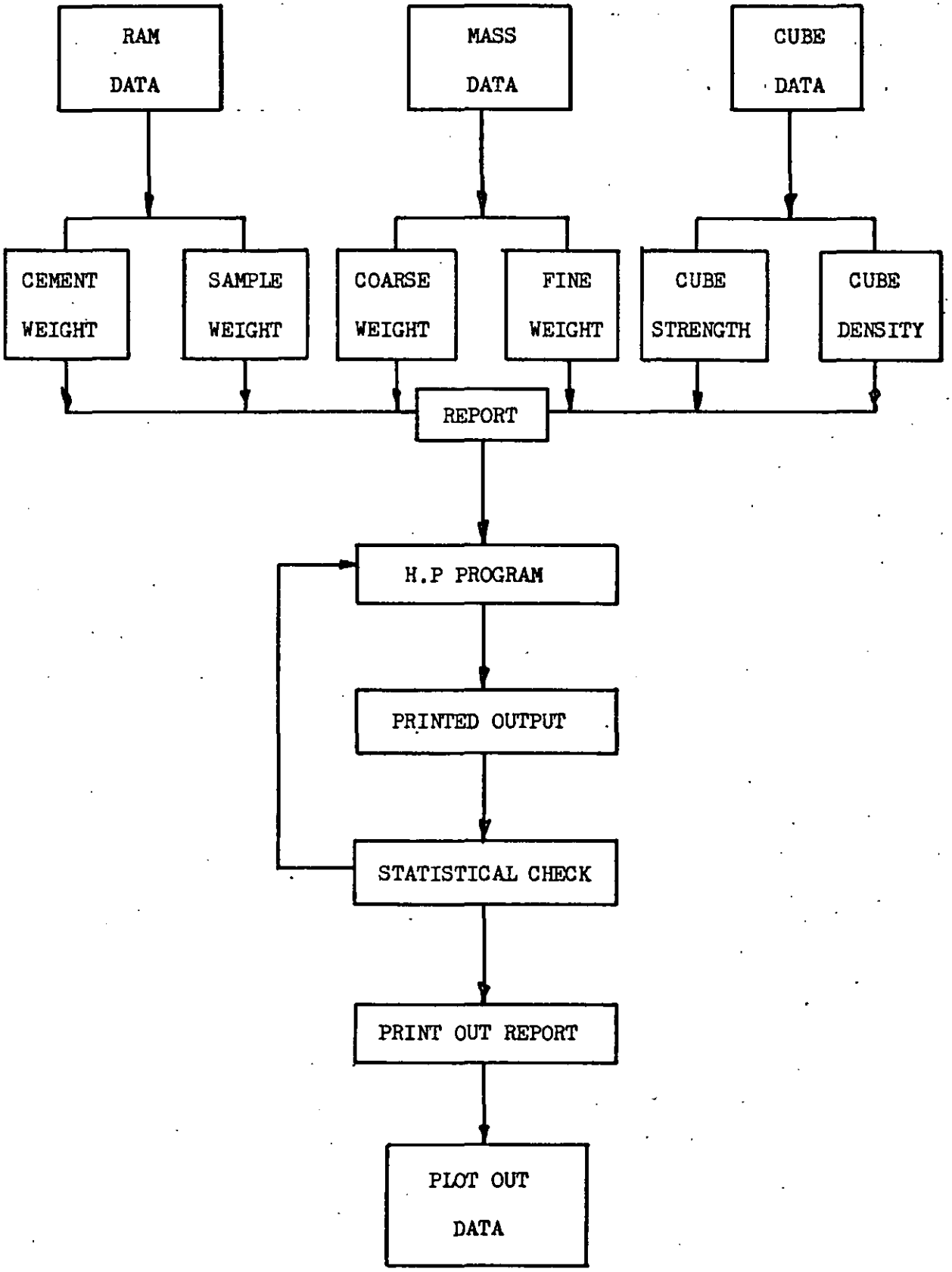

Fig 28

CONCRETE MIXING TESTS RESULTS SUMMARY

MIXER DATA	
MIXER TYPE	
PAN/DRUM SPEED RPM	STAR/ROTOR SPEED RPM
MIX DATA	
MIX TYPE	MIXING TIME SECS
BATCH I	
SLUMP mm	DENSITY KG/M^3

SAMPLE REFERENCE	Ist Qtr		2nd Qtr		3rd Qtr		4th Qtr	
	A	B	C	D	E	F	G	H
WEIGHT OF SAMPLE (KG)								
WEIGHT (OF CEMENT (KG)								
WEIGHT OF IO% FINE (KG)								
WEIGHT OF AGGREGATE IN ELUTRIATOR (KG)								
CUBE STRENGTH (N/mm^2)								
CUBE DENSITY (KG/M^3)								

REMARKS

BATCH 2	
SLUMP mm	DENSITY KG/M^3

SAMPLE REFERENCE	Ist Qtr		2nd Qtr		3rd Qtr		4th Qtr	
	A	B	C	D	E	F	G	H
WEIGHT OF SAMPLE (KG)								
WEIGHT OF CEMENT (KG)								
WEIGHT OF IO% FINE (KG)								
WEIGHT OF AGGREGATE IN ELUTRIATOR (KG)								
CUBE STRENGTH (N/mm^2)								
CUBE DENSITY (KG/M^3)								

REMARKS

COMPILED:	DATE:	REFERENCE:	PAGE:

Fig. 29

deviation and coefficient of variation of each sample set of data, the complete information on each set of samples was then typed on report sheets using another program. A sample sheet is shown in Fig. 30. At this stage the printed data was manually examined for outliers.

To test for outliers a statistical method was employed, this involved calculating the value of

$$\frac{\text{Extreme Value} - \text{Overall Mean}}{\text{Overall Standard Deviation}}$$

and if this exceeded a critical level, which is dependent upon sample size, it was rejected.

The corrected data was again imputed to the data storage file and reprocessed to give the corrected printout sheets. The corrected processed data was also stored on an additional tape file, this was to be used to plot the comparative graphs used later.

The report sheets do include the two sets of results for each mixing time, in order to use both sets of results, a method of combining the individual coefficient of variation to give a combined results was used. This method takes into account the variations in batching, this is achieved by taking logarithms (to the base 10) of the individual observations and then computing the variance of the transformed data.

$$\text{C.V.} \quad (x) = 100 \log_e 10 \times \sqrt{V(\log x)}$$

$$v(x) = 230.26 \sqrt{V(\log x)}$$

This method was applied to all the data obtained using more than one batch. This information was added to the tape data store already prepared for data from other reports.

1

CONCRETE MIXING TESTS RESULTS SUMMARY

MIXER DATA :- TYPE :- CUMFLOW. PAN/DRUM SPEED. 12.0RPM. STAR/ROTOR SPEED. 57.0 RPM.

MIX DATA:- MIX TYPE. 1 MIXING TIME. 30 Seconds

BATCH NUMBER :- 1 SLUMP :- 75 mm. DENSITY :- 2325 Kg/Cu.Metre DATE of Test :-18/ 4/77.

Sample Reference		A	B	C	D	E	F	G	H	MEAN	S.D	C of V
WATER CONTENT	%	7.24	5.10	7.93	8.00	5.68	7.18	7.20	8.03	7.05	1.09	15.51
CEMENT CONTENT	%	16.18	16.27	15.83	15.94	14.49	14.67	15.05	15.41	15.48	0.68	4.41
FINE AGGREGATE CONTENT	%	30.22	31.92	31.63	31.85	28.95	30.53	29.73	30.08	30.61	1.09	3.55
COARSE AGG. CONTENT	%	46.36	46.71	44.62	44.21	50.87	47.62	48.02	46.48	46.86	2.09	4.45
CUBE STRENGTH N/Sq.mm.		22.39	23.68	24.54	23.25	21.96	22.39	23.25	22.39	22.98	0.86	3.73
CUBE DENSITY Kg/Cu.Metre		2317	2345	2331	2317	2331	2331	2317	2303	2324	13	1

BATCH NUMBER :- 2 SLUMP :- 85 mm. DENSITY :- 2313 Kg/Cu.Metre DATE of Test :-19/ 4/77.

Sample Reference		A	B	C	D	E	F	G	H	MEAN	S.D	C of V
WATER CONTENT	%	8.64	9.13	8.50	7.97	6.93	6.08	7.56	8.31	7.89	1.00	12.65
CEMENT CONTENT	%	14.96	14.77	15.33	13.86	15.71	14.97	14.35	14.45	14.80	0.58	3.94
FINE AGGREGATE CONTENT	%	30.07	30.39	31.16	31.84	28.71	30.32	29.96	30.40	30.36	0.91	3.00
COARSE AGG. CONTENT	%	46.33	45.72	45.00	46.32	48.64	48.64	48.13	46.84	46.95	1.37	2.93
CUBE STRENGTH N/Sq.mm.		23.25	23.25	21.10	19.81	21.10	21.53	23.25	25.83	22.39	1.88	8.40
CUBE DENSITY Kg/Cu.Metre		2331	2317	2303	2303	2317	2331	2331	2345	2322	15	1

Fig 30

7.13 RESULTS

The following results have been plotted from the data tape.

7.13.1 Batching

In a report from Wexham Developments doubts were expressed about the accuracy of batching the ingredients used in the mixing tests. To prove if this report was correct a plot of the analysed percentage content of the various ingredients was prepared, an overlay of the allowable tolerances as defined in B.S. 3963 was also drawn. (See Plot 7.1.)

The major ingredients which influence the properties of the final concrete are the ratio of water to cement. The most accurate measurement from the R.A.M. is that of cement content, and due to the subtractive method of analysis the least accurate is that of water. From Plot 7.1 it is seen that the batched quantity of cement is within the allowable tolerances.

The fine aggregate is within limits in all but the case of Mix 1 on the reversing drum machine, the possible reasons for this was the measurement of the 10% fines content was suspect in the analysis of this mix. For details see Section 7.11.2 dealing with the modifications to the specification. The coarse aggregate is more variable, this is particularly true in the case of Mix 1 and indicates a tendency to segregation in the more fluid mix. The water content shows considerable variation but this is due to the method of calculation.

The correct batching hypothesis is also supported by Plot 7.12. This graph shows the cement content in each sample plotted against the compressive strength achieved from the cube tests. The results indicated as would be expected, a straight line, the law $y = 0.27x + 8.38$ was found to give the best fit, in fact a correlation coefficient of 0.97.

The fact that the strength of the concrete depends mainly upon the

ratio of water to cement is considered, and accepting that the cement content figures from the R.A.M. analysis are correct, then we would expect the straight line graph only if the water cement ratio was correct, this then indicates an error in the water content figured and throws doubt on the subtractive method of analysis for water content.

7.13.2 Plots of Results

Graphs have been plotted from the results on the correct results tape. Details of plots are shown in Fig. 31.

PLOT	X AXIS	Y AXIS	MIX	TYPE	COMMENTS
7.1	FILE	PERCENTAGE CONTENT	1	MIX CONSTITUENTS	(1)
7.2	TIME	COEFFICIENT OF VARIATION	1	COARSE	
7.3	"	"	1	FINE	
7.4	"	"	1	WATER	(1)
7.5	"	"	1	CEMENT	
7.6	"	"	1	COMP. ST	
7.7	"	"	3	COARSE	
7.8	"	"	3	FINES	
7.9	"	"	3	WATER	(2)
7.10	"	"	3	CEMENT	
7.11	"	"	3	COMP. ST	
7.12	COMP STRENGTH	CEMENT CONTENT	1 & 3		(2)

(1) See comment on batching

(2) See comment on water content.

Fig. 31

No individual comments are made on these plots, but they are incorporated in those on the combined plots.

7.14 TEST RESULTS FROM OTHER REPORTS

In considering the available information from previous testing, the main comparisons made are those of Ref. (35), but in addition to the data from Ref. (48) was also included.

This information was plotted together with that from the company series of tests and the combined Plots 7.13 to 7.26 was the result. The contents of these plots are detailed in Fig. 32.

SUMMARY OF PLOTS

PLOT	X AXIS	Y AXIS	MIX	TIME	COMMENTS
7.13	TIME	COEFFICIENT OF VARIATION	1	COARSE	-
7.14	"	"	1	FINE	-
7.15	"	"	1	CEMENT	-
7.16	"	"	1	COMP.ST	-
7.17	"	"	3	COARSE	-
7.18	"	"	3	FINE	-
7.19	"	"	3	CEMENT	-
7.20	"	"	3	COMP.ST	-
7.21	"	"	3(5)	COARSE	5 mm SLUMP
7.22	"	"	3(5)	FINE	-
7.23	"	"	3(50)	CEMENT	-
7.24	"	"		COMP.ST	-
7.25	"	"	1(70)	COARSE	70 mm SLUMP
7.26	"	"	1(70)	COMP.ST	70 mm SLUMP

Fig. 32

Observations on Comparative Plots

Plot 7.13 Coarse Aggregate Mix 1 : The Cumflow is approximately comparable with the turbine and is significantly better than the counter current. The Liner reversing drum gave the best results of the production mixing machines but the Rotary gave comparable or better results in a shorter time.

Plot 7.14 Fine Aggregate Mix 1 : All the mixers produce approximately the same quality at approximately 40 seconds, the Cumflow quality reducing after this time and the turbine and counter current improving with further mixing. The Liner reversing drum gave by far the highest value. The Rotary again produced approximately the same results but in shorter time.

Plot 7.15 Cement Content Mix 1 : The three Liner mixers gave the highest quality in the shortest times. The Rotary appears to reduce in quality with time.

Plot 7.16 Compressive Strength Mix 1 : The Cumflow and Fluiverse are the least good followed by the turbine and other reversing drum. The best was the Rotary, and this was achieved in the shortest time.

Plot 7.17 Coarse Aggregate Mix 3 : The Liner mixers produced the best results of all in the shortest time.

Plot 7.18 Fine Aggregate Mix 3 : The results are all much in the same area, with the exception of the Rotary, which produced the best results in the shortest time.

Plot 7.19 Cement Content Mix 3 : The results are again all in the same area, the worst being the turbine and the best again the Rotary.

Plot 7.20 Compressive Strength Mix 3 : The results are again in the same area, the competitive reversing drum is the best, but is closely followed by the Rotary.

Plots 7.21 to 7.24 Mix 3 : These plots show the results of tests using a low slump mix (5 mm). In general the results show an improvement over those of the other mixes. This is probably due to the reduction in the tendency to segregation.

Plots 7.25 and 7.26 Slump 70 mm Mix 1 : These plots show the results from a large tilting drum mixing machine (common in the U.S.A.). The results for coarse aggregate content show the cluster of results around 4%. The compressive strength results are much more variable and do not give results below 4%.

7.15 RESULTS FROM MODIFIED CUMFLOW

The RP 550 Cumflow was modified to give a matrix of star/pan speeds, Fig. 33.

SPEEDS IN R.P.M.		STAR SPEEDS		
		40	57	80
PAN	12	E	*	n
SPEED	18	H	G	F

* normal speed for Cumflow mixer

Fig. 33

To recap the tests were carried out to check that the recommended pan/star speed combination was the most efficient.

The tests were carried out by modification of the drive system, the modification involved the changing of the sprockets, shown in Fig. 34.

A sample calculation for the gear ratio required is given below.

REVS OF COUNTER SHAFT $= \frac{1450 \times 5}{30.54} = 237.5$ R.P.M.

REVS OF STAR DRIVE SHAFT $= \frac{237.5 \times 19}{57} = 79.2$ R.P.M.

REVS OF STAR $= \frac{79.2 \times 23}{32} = 57$ R.P.M.

REVS OF BP SHAFT $= \frac{237.5 \times 19}{38} = 118.8$ R.P.M.

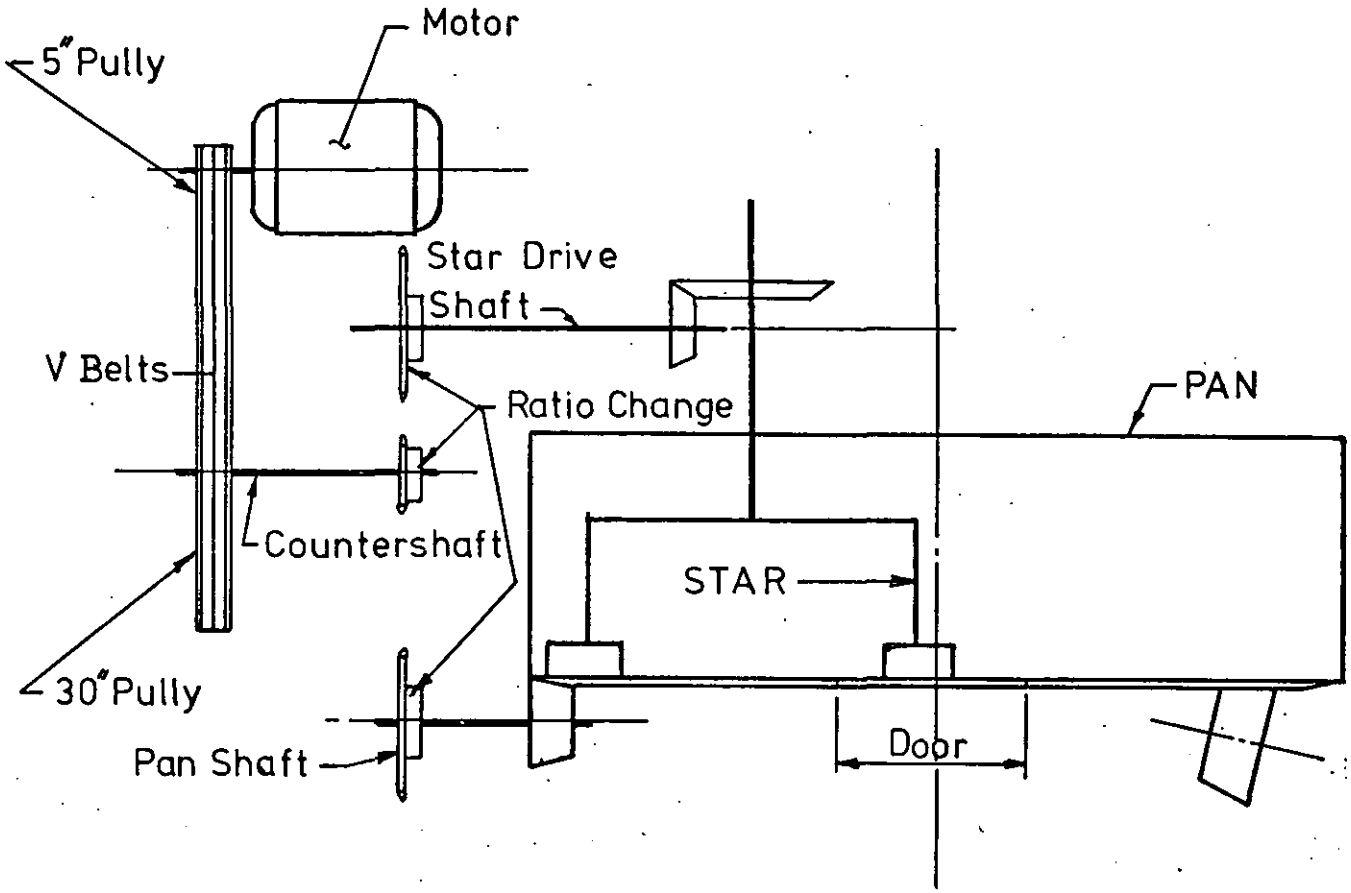

Fig. 34

REVS OF PAN $= \frac{118.8 \times 12}{118} = 12.1$ R.P.M.

REVS OF PAN ROLLER $= \frac{12.1 \times 32.4375}{6} = 65.4$ R.P.M.

The ratios given in Fig. 33 and the above calculations are those as standard in the Cumflow mixer.

7.15.1 Results

The plot from these results are detailed in Fig. 35.

PLOT	X AXIS	Y AXIS	MIX	TYPE
7.27	TIME	COEFFICIENT OF VARIATION	3	COARSE
7.28	"	"	3	FINE
7.29	"	"	3	WATER
7.30	"	"	3	CEMENT
7.31	"	"	3	COMP. ST

Fig. 35

The above plots also include the lines for the other mixers in the test program, this is to allow a comparison to be made (See 7.17.13).

7.16 POWER USED IN MIXING

The power used in mixing the concrete was obtained from three of the mixing machines used in the test program.

1) Cumflow 550
2) Modified Cumflow
3) Rotary.

7.16.1 Cumflow 550

The power curves for the Cumflow are shown in Plot 7.32, this clearly shows the variation of power used with the length of time mixing. In all the curves the power reduces after the initial wet dry mix and then settles to a phase of constant power up to 100 to 130 seconds, when a decline is noticed, the figure then reached would appear to be maintained. The normal inference from this is that the mixing is complete at the point of decline i.e. 100 to 130 seconds.

The plot also shows the power used by the modified Cumflow, the outstanding curve, F, is as would be expected for the maximum star pan speed combination and those in E and H are those of the minimum star speeds. This confirms the star as being the largest power user in the system. The average power used by the standard Cumflow is 5.25 kW and the cycle time on average is 180 seconds. The power at no load is 1.8 kW

$\therefore$ power used in mixing is 5.25 -1.8 = 3.45 kW

The energy consumed per mix is $\frac{3.45 \times 3}{60} = 0.17$ kWh

energy used to mix 788 kg of concrete = 0.17 kWh

This gives a specific energy consumption of $\frac{0.17 \times 2350}{788}$ kWh/m^3

$= 0.514$ kWh/m^3

7.16.2 Rotary

The Rotary mixer requires 1.58 kW of power to mix 91 kg of concrete (Section 8, Table 13). This value is the power actually used in mixing i.e. Total power less no load power. The cycle time per batch is assumed to be 20 seconds given the required batching equipment.

Hence the energy consumer per mix = $\frac{1.58 \times 20}{60 \times 60}$ = 0.0088 kWh (To mix 91 kg)

∴ The specific energy consumption would be:-

$$= \frac{0.0088 \times 2350}{91} = 0.23 \text{ kWh/m}^3$$

A comparison of the relative efficiency of these two mixers can be found by comparing their specific energy consumptions.

Hence $\frac{0.514}{0.23} = 2.27$

Therefore it can be said that the Rotary machine is 2.27 times more efficient than the Cumflow.

7.17 CONCLUSIONS

7.17.1 Specification

The specification proved to be acceptable in all parts, with the exception of two, these being the method of timing the mixing and the sieving of the coarse aggregate from the elutriation tube.

The timing of the mix was simply overcome by the redefining of the method used. The aggregate sieving was finally deleted. The reason for this was firstly to speed the tests as the sieving was the critical time factor and secondly, the results from the first series of tests indicated a high susceptibility to change of operator. This was of interest as the British Standard method of analysis depends entirely upon this system of

sieving, but the standard does not mention the need for consistency of operator. The Rapid Analysis Machine on the whole is totally automatic and hence not susceptible to operator changes.

7.17.2 Efficiency of the Test Program

Time Scale. The time scale achieved for the test program was very similar to that envisaged in the specification. The points noted below would have allowed the program to be increased in efficiency.

a) A continuation of the same staff on all parts of the testing. This was particularly true on the batching of materials.

b) The arrangement of a better system of waste removal from the R.A.M., this proved to be the limiting factor on the test program.

c) The vibrating table was not designed to function at the correct frequency, and this necessitated the leaving of the cube moulds on the table for long lengths of time. This was not good for the accuracy of the testing or the working environment for the operatives.

(NOTE: The design requirements for the vibrating table are an acceleration of 4 g to 7 g and a frequency of between 1,500 and 7,000 cycles/min. About 1.5 g and an amplitude of 40 μm (0.0015 in) are believed to be the minima necessary for compaction.)

7.17.3 Sampling

The methods used for all the tests except the Rotary were the same. The mix was discharged from the mixer into a sampling trolley, the individual samples were taken in a similar way as possible and with a minimum of operator change. This reduced the error due to sampling to a minimum.

The method used with the Rotary mixer was different, as no method of discharge was available, as no samples were taken directly from the mixing

vessel, the method used was to remove the concrete from the same positions around the drum, hence again, minimizing errors.

7.17.4 Rapid Analysis Machine (R.A.M.)

This machine was at the centre of the test program. It performed without any breakdowns, the machine was checked for accuracy at weekly intervals, or after any length of time for which it was not used. The machine was automatic in its operation and thus does not suffer from errors introduced by the operator, this benefit applies not only to the determination of the cement content, but also to the coarse and fine aggregate. The speed of operation was to analyse eight samples in approximately 1 hour 30 minutes (13 minutes per sample). The limiting factor being the removal of the waste wash water. The accuracy of the machine was satisfactory, particularly as the main need of the analysis was for consistency.

7.17.5 Weighing of the Coarse and Fine Aggregates

The submersion method used was considered to give good results, particularly with the use of the correct size of constant volume siphon can. This was particularly true of the 10% fines as the result is multiplied by 10. This method is not particularly sensitive to operator error, as again, the operation is semi-automatic.

7.17.6 Cubes

Manufacture. The main problem with the manufacture of the cubes was the slow action of the vibrating table. This was particularly the case with the stiffer mixes. The cubes when demoulded proved to be porous, this was limited to those made during the modified Cumflow tests, but as the density figures show, this appears to have had little effect on the cube strength.

An additional problem which was aggravated by the poor vibrating

table, was the high rate of change of staff on the cube manufacture, but all cubes made in a particular batch were made by the same operator. In considering these problems, it should be noted that the quality of the cubes, if judged on the coefficient of variation of density, was good.

Testing of Cubes. The cubes were tested at Newcastle University, Department of Civil Engineering. This proved to be a very satisfactory arrangement.

7.17.7 Density

The density of the wet concrete was measured using .01 cu meter density pot. The method was good, but again, hampered by the poor vibrating table.

7.17.8 Slump

The measurement of the slump of the wet concrete was carried out by one operator, and the results used to judge the acceptance within the required specification.

7.17.9 "V - B"

It was not possible to carry out these tests due to the non-availability of the V - B equipment. The results from this test would have given a non-operator sensitive indication of the workability of the wet concrete.

7.17.10 Types of Mix

The types of mix used proved to be a reasonable compromise. The only problem occurred with Mix 3, using short mixing times. The high cement content caused a 'Flash set", this only caused minor problems with the handling of the concrete.

7.17.11 Results (Liner)

The plot of results are shown in Plots 7.1 to 7.12.

The water content results are not considered to be accurate, due to the subtractive method of analysis.

The comments on the graph are given in Section 7.13, where these results are compared with those from the competitive results.

From the actual operation of the mixers, the following points were noted.

a) Cumflow

1. Loading of ingredients

The loading of ingredients was very dusty, due mainly to the open construction of the mixer. (Dust covers not being fitted at the time.)

2. Addition of water

The addition of the water to the mix was carried out using the standard Invarac tank, the water for the mix being weighed prior to addition to the tank. The point of addition of the water was as close to that used on the standard machine as possible, Fig. 36.

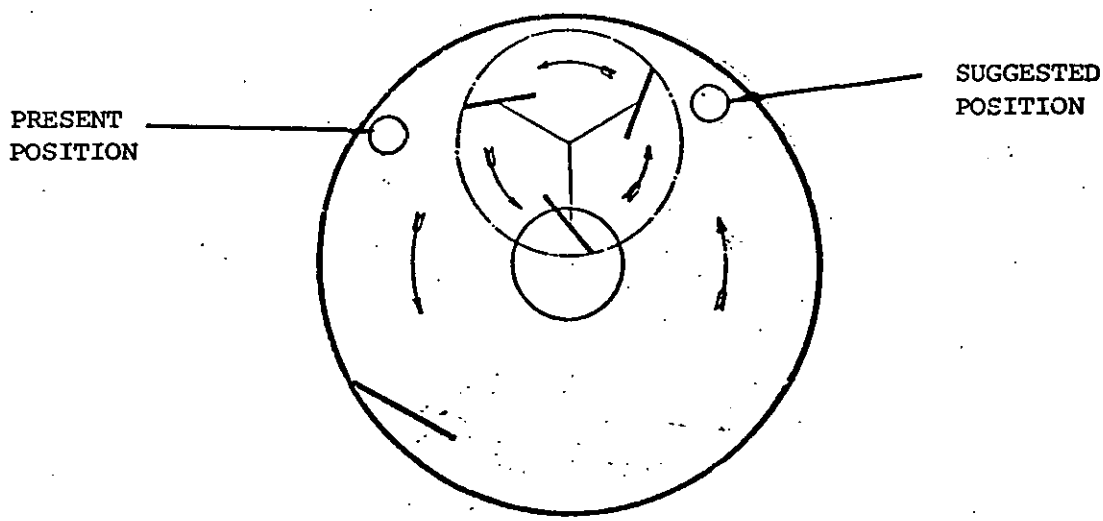

Fig. 36

The following points are noted:-

a) The discharge rate was 35 secs for the addition of 59 kg of water.

b) The positioning of the inlet to the mixing pan on the test mixer appeared to be less than ideal, the water formed a river around the outer periphery of the mix and was not mixed in by the action of the star. In the case of the 30 second mixing time, the river had only just absorbed into the mix. It would seem a more efficient method to either introduce the water via spray bars (as is already fitted to various models of the Cumflow), or at a point further around the pan, nearer to the mixing star and further away from the side. This would use the mixing action to incorporate the water in a more efficient manner.

A combination of these suggestions could be used.

3. Discharge of mix

The discharge of the mix was clean, the only problem encountered was the trapping of the mix in the door seals and around the short discharge chute, which necessitated frequent cleaning of the door and chute. This problem was probably exaggerated by the intermittent use of the mixing machine.

4. Scraper blades

The side scraper blade had to be adjusted during the test runs and the discharge blade failed to operate on a few occasions. These malfunctions were corrected by adjustments.

5. Cleaning

The mixer in general was difficult to keep clean, particularly in the case of the intermediate duty called for on these tests. The parts of the mixer which came into contact with the mix proved to be difficult to clean because of the crevices. This problem is typical of mixers which use a stirring action.

b) Reversing Drum

1. Loading of ingredients

This appeared to be satisfactory in most cases, but a small amount of spillage was noted if the hopper was raised too quickly.

2. Addition of water

The method used was peculiar to the mixing trials, so no comment can be made on the production system.

3. Discharge of mix

The discharge of Mix 1 was good, leaving only a small residual amount in the drum and adhering to the blades. With Mix 3 the residual amounts were larger and a large amount (approximately two buckets) was trapped in the discharge blades.

c) Rotary

The prototype was still in the development stage, but it did perform in a consistent way, the concrete mixed was comparable in all properties with that from the standard range of Liner machines. Reference should be made to Section 8 for a more detailed account.

7.17.12 Results Rating, Test and Independent Data

To quantify the results of the test program and the information from the previous test reports, a simple rating system has been used. From each plot of coefficient of variation against mixing time (7.13 to 7.26) the relative position of each mixer was noted. These results were then rated, that is, the mixer with the best performance was rated 1 and that with the worst rated 6. To give a representative indication of performance the rating was carried out at three mixing times:-

1) Up to 45 seconds

2) Up to 60 seconds

3) Up to 120 seconds.

The rating was carried out on each of the reliable test parameter, i.e. coarse and fine aggregate content, cement content and compressive strength. The totals for each of these were added and a final rating for each mix and time obtained.

Detailed summaries of the ratings a shown in Tables 3, 4, 5 and 6.

Table 3

This table contains information on Mix 1. It includes information on compressive strength, but does not include the counter current mixer, the reason for this is that no compressive strength data is available for Mix 1 using the counter current mixer. In all mixing times the Liner mixers have obtained the first three places.

Table 4

This table complements Table 3, and gives the information on Mix 1 again, includes the counter current mixer but excludes compressive strength, this did not change the first three places, which were again taken by Liner machines.

Table 5

This table again is a compromise due to the lack of data on compressive strength Mix 3 for the counter current mixer, in the timing up to 120 seconds the Liner mixers are in the first three positions, but for the shorter times the non Liner Reversing Drum mixer improves its position to second behind the Rotary.

Table 6

Table 6 shows comparison of the Liner test data from Mix 3 against the available information on Mix 3 having a slump of 5 mm (Ref. 35). These results give a marked change in the overall placings, in the up to 120 second the Liner mixers take the first three places, but as the time

0 TO 120 SECONDS		MIXER					
MIX	CONSTITUENT	ROTARY	REV. DRUM LINER	CUMFLOW	REV. DRUM	TURBINE	C.C.
1	COARSE	1	2	3	5	4	-
1	FINE	1	5	3	4	2	-
1	CEMENT	3	1	2	4	5	-
1	COMP. ST.	1½	5	4	1½	3	-
1	TOTAL	6½	13	12	14½	14	-
	RATING	1	3	2	5	4	
0 TO 60 SECONDS							
1	COARSE	1	2	4	5	3	-
1	FINE	1	5	3	4	2	-
1	CEMENT	2	1	3	4	5	-
1	COMP. ST.	1½	5	3½	1½	3½	-
1	TOTAL	5½	13	13½	14½	13½	-
	RATING	1	2	3	5	3	
0 TO 45 SECONDS							
1	COARSE	1	2	5	4	3	-
1	FINE	1	5	2	3	4	-
1	CEMENT	1	2	3	4	5	-
1	COMP. ST.	1	4	3	2	5	-
1	TOTAL	4	13	13	13	17	-
	RATING	1	2	2	2	5	

Table 3

Table 4

0 TO 120 SECONDS		MIXER					
MIX	CONSTITUENT	ROTARY	REV. DRUM LINER	CUMFLOW	REV. DRUM	TURBINE	C.C.
1	COARSE	1	2	3	5	4	6
1	FINE	1	6	3	5	2	4
1	CEMENT	3	1	2	4	5	6
1	TOTAL	5	9	8	14	11	16
	RATING	1	3	2	5	4	6
0 TO 60 SECONDS							
1	COARSE	1	2	4	5	3	6
1	FINE	1	6	3	5	2	4
1	CEMENT	2	1	3	4	5	6
	TOTAL	4	9	10	14	10	16
	RATING	1	2	3	5	3	6
0 TO 45 SECONDS							
1	COARSE	1	2	5	4	3	6
1	FINE	1	6	2	4	5	3
1	CEMENT	1	2	3	4	6	5
1	TOTAL	3	10	10	12	14	14
	RATING	1	2	2	4	5	5

0 To 120 SECONDS				MIXER			
MIX)	CONSTITUENT	ROTARY	REV.DRUM LINER	CUMFLOW	REV.DRUM	TURBINE	C.C.
3	COARSE	3	2	1	4	5	-
3	FINE	1	3	4	2	5	-
3	CEMENT	1	4	2	3	5	-
3	COMP.ST.	2	1	4	3	5	-
3	TOTAL	7	10	11	12	20	-
	RATING	1	2	3	4	5	
0 TO 60 SECONDS							
3	COARSE	2	3	1	4	5	-
3	FINE	1	3	4	2	5	-
3	CEMENT	1	4	3	2	5	-
3	COMP.ST.	2	1	4	3	5	-
3	TOTAL	6	11	12	11	20	-
	RATING	1	2	4	2	5	
0 TO 45 SECONDS							
3	COARSE	1	2	3	4	5	-
3	FINE	1	3	5	2	4	
3	CEMENT	1	4	2	3	5	-
3	COMP.ST.	1	3	4	2	5	-
3	TOTAL	4	12	14	11	19	-
	RATING	1	3	4	2	5	

Table 5

reduces all but the Rotary are displaced mainly by the turbine (Teka) and the counter current. This would indicate that these mixtures are probably better at mixing stiffer concrete.

It should be noted that the comparison made between the results from this set of tests and those from the previous tests carried out by A. Johansson (35) did not use the same materials or method of analysis. In the absence of any other data, and by the use of coefficient of variation, they are thought to give a good indication of the relative performance of competitive mixing machines.

0 TO 120 SECONDS				MIXER			
MIX	CONSTITUENT	ROTARY	REV. DRUM LINER	CUMFLOW	REV. DRUM	TURBINE	C.C.
3	COARSE	3	2	1	4	5	6
3	FINE	1	2	5	6	3	4
3	CEMENT	1	3	2	6	4	5
3	COMP.ST	5	1	6	3	3	3
	TOTAL	10	8	14	19	15	18
	RATING	2	1	3	6	4	5
0 TO 60 SECONDS							
3	COARSE	2	4	1	3	5	6
3	FINE	1	4	6	5	2	3
3	CEMENT	1	4½	2½	6	2½	4½
3	COMP.ST	5	4	6	2	2	2
	TOTAL	9	16½	15½	16	11½	15½
	RATING	1	6	3	5	2	3
0 TO 45 SECONDS							
3	COARSE	1	3	5	2	4	6
3	FINE	1	4	6	5	2	3
3	CEMENT	1	3½	2	6	5	3½
3	COMP.ST	4	5	6	2	2	2
	TOTAL	7	15½	19	15	13	14½
	RATING	1	5	6	4	2	3

Table 6

Table 7

Here a comparison of the ratings of the mixers, excluding the counter current, have been combined to give an overall rating for the mixers. From these results a similar picture to that present in Table 6, the 0 - 120 second results put the Liner mixers at the front, as does the 0 - 45 seconds the Liner Cumflow production machines are displaced by the Liner Reversing Drum mixer. The turbine mixer is consistently last in this table, and the Rotary machine is consistently first.

COMBINATION OF MIX 1 AND MIX 3 EXCLUDING COUNTER CURRENT MIXER

0 - 120 SECONDS			MIXER		
MIX	ROTARY	REV. DRUM LINER	CUMFLOW	REV. DRUM	TURBINE
1	6½	13	12	14½	14
3	7	10	11	12	20
TOTAL	13½	23	23	26½	34
RATING	1	2	2	4	5
0 - 60 SECONDS					
1	5½	13	13½	14½	13½
3	6	11	12	11	20
TOTAL	11½	24½	25½	25½	33½
RATING	1	2	3	3	5
0 - 45 SECONDS					
1	4	13	13	13	17
3	4	12	14	11	19
TOTAL	8	25	27	24	36
RATING	1	3	4	2	5

Table 7

The summary of the results are given in tables as shown below.

1) Table 7 Mix 1 excluding counter current mixer but including compressive strength.

2) Table 8 Mix 1 including counter current mixer but excluding compressive strength.

3) Table 9 Mix 3 excluding counter current mixer but including compressive strength.

To summarize the results from Tables 7, 8 and 9.

Table 8

Again a combining of Mixes 1 and 3 are shown, the the Mix 3 (5 mm slump) from Table 6 has been used in order to allow the counter current mixer to be considered. Yet again, the 0 - 120 second mixing time the

0 - 120 SECONDS				MIXER		
MIX	ROTARY	REV. DRUM LINER	CUMFLOW	REV. DRUM	TURBINE	C.C.
1	5	9	8	14	11	16
3	10	8	14	19	15	18
TOTAL	15	17	22	33	26	24
RATING	1	2	3	6	5	4
0 - 60 SECONDS						
1	4	9	10	14	10	16
3	9	16½	15½	16	11½	15½
TOTAL	13	25½	25½	30	21½	31½
0 - 45 SECONDS						
1	3	10	10	12	14	14
3	7	15½	19	15	13	14½
TOTAL	10	25½	29	27	27	28½
RATING	1	2	6	3	3	5

Table 8

Liner mixers are dominant but as the time is reduced, they become less dominant for the mixes considered. The turbine improved in these figures and the Liner Reversing Drum mixer also gave a consistent performance.

Summary

From the tables the main and overriding conclusion was the consistent position of the Rotary mixing machine. This machine came first in all but one of the bests.

The remaining Liner mixers did well and the most surprising results was the consistent placing of the Liner Reversing Drum mixer.

7.17.13 Modified Cumflow

The testing of the Cumflow at various pan/star speed combinations was designed to determine the best possible combination. With this in mind the

same rating system used in Section 7.17.12 was utilized. Table 9 details this information.

Combination E was best, this gave a star speed of 40 r.p.m. and a pan speed of 12 r.p.m. The second best was combination F using a star speed of 80 r.p.m. The normal star speed being 57 r.p.m. and a pan speed of 12 r.p.m. came in joint third position. The combination which gave the lowest variation in cement content was combination E, yet the lowest variation in compressive strength was given by combination F. This also gave a larger power input to the machine, this would also bear out the method of mixing used by one of the main competitors. This method used a high speed whirling star supplied with large power inputs, up to 200 h.p. and it is claimed that this gives reduced mixing times and increased final compressive strength, but at the expense of high power usage and high associated wear rates.

In an attempt to clarify the position, a further rating table was constructed. This not only included the normal and modified star/pan combination, but also included the reversing drum and the Rotary mixer. The results, Table 10, again indicated that combination E was superior followed by F, and in third place, combination D, reversing drum and Rotary mixer.

If these results are considered in conjunction with those in Section 7.12.12 then it is considered that sufficient evidence has been found to indicate that additional research into the star/pan speed combination would have an advantageous effect upon the performance of the Cumflow.

TIME SECS	MIX TYPE	CONSTITUENTS	N.C.	D	E	F	G	H
60	3	COARSE	1	5	4	3	2	6
60	3	FINE	4	3	1	2	6	5
60	3	CEMENT	4	2	1	5	3	6
60	3	COMP. ST	3	2	4	1	5	6
		TOTAL	12	12	10	11	16	23
RATING			3	3	1	2	5	6

Table 9

Cumflow

CONSTITUENT	D	E	F	G	H	N.C.	R.D.	ROT
COARSE	7	5	3	2	8	1	4	6
FINE	3	1	2	8	7	6	5	4
CEMENT	2	1	7	3	8	5	6	5
COMP. ST	4	6	3	7	8	5	1	2
TOTAL	16	13	15	20	31	17	16	16
RATING	3	1	2	7	8	6	3	3

Table 10

Additional codes used :

RD = FLUIVERSE

R = ROTARY

NC = NORMAL CUMFLOW

NOTE: All the above are for Mix 3 at a time of 60 seconds.

7.17.14 Energy Used in Mixing

The specific energy consumption of the mixers tested were:-

Cumflow 0.514 kWh/m^3

Rotary 0.23 kWh/m^3

This shows the Rotary mixing machine has a lower specific energy consumption by a factor of 2.25.

7.17.15 Supplementary Points on the Rotary Mixing Machine

The following supplementary information obtained on the Rotary mixing machine.

a) Quality of Mixing

The indications from all the comparisons of the present Liner range of mixers and those of the competition derived from independent reports, are that the concrete produced by the Rotary mixer is of as good a quality, and in most cases, better than the present mixers.

b) Power

The power used by the Rotary mixing machine is higher than that used by the Cumflow (when comparing like amounts of concrete).

Power Ratio = Rotary : Cumflow = 1.58/91/3.45/788 = 4

As the quality of concrete produced is as good if not better than that produced by the Cumflow, this tends to support the theory that higher the powers used, the better the resulting mix.

c) Possible Output

The Cumflow mixer can achieve an output of $\frac{788 \times 60}{2350 \quad 3} = 6.7\ m^3/hour$ this assumes a cycle time of 3 minutes. There is some doubt about this figure as the company recommend a cycle time of 30 seconds, but at this stage the proved mixing time for comparable quality using the test results would indicate a cycle time of 3 minutes.

On the other hand, the hourly output of the prototype Rotary mixer would depend not only upon the actual mixing time but also upon the input/output equipment available, but it is considered that a cycle time of between 20 and 30 seconds would be practicable.

Hence the hourly output may be calculated from the formula:-

$$\text{Output} = \frac{\text{Batch Capacity} \times 3600\ m^3/hr}{\text{Cycle Time} \times 2350}$$

where the:- batch capacity is in kg , cycle time is in seconds

From this formula the curve shown in Plot 7.33 was constructed, this gives the theoretical output for a given cycle time using the prototype Rotary mixer. The original prototype was designed to produce 3 cu ft (0.085 m^3) of concrete per batch (450 lb/205 kg) if this could be achieved the output curve as shown dotted in the plot could be accomplished. At this time no minimum mixing time is known but from the observations made of the tests, it is thought possible that the minimum of 20 seconds may be reduced, possible outputs are shown on the plot 7.33, as can be seen, considerable advantage can be gained from mix time saved below 20 seconds.
To equal the Cumflow rate of output the 91 kg machine must achieve a mixing cycle of 21.5 seconds, alternatively using the 200 kg perfected prototype a cycle time of 46 seconds would be required. This reduction in cycle times would have its main advantage in the minimising of batching plant size and in the ability to simple replace existing mixing machinery with the Rotary machine.

d) Compressive Strength

The test results shown in Plot 7.34 show the mean compressive strength plotted against mixing time, as may be seen from the plot, the Rotary machine produces concrete of higher strength, in both the mix designs, in a shorter time. The percentage increase of compressive strength of the concrete mixed in each type of machine is shown in Table 11. In the case of Mix 1 in the Rotary machine, the best value of a 37.5% increase over the lowest was doubted, so the second best result has also been included.

MIXER	MIX 1	MIX 3
ROTARY	* 37.5 (21)	6.5%
REVERSING DRUM	16.7	0
CUMFLOW	0	4.3%

* Figure in brackets is the second best result obtained.

Table 11

The above increases would seem to be very high, certain points should be noted.

a) The concrete was not discharged from the mixing machine, hence reducing the possibility of segregation and so improving the mix.

b) It should be noted that the Rotary mix appears to have a higher cement content than the usual mix. By considering Plot 7.12 the strength values corresponding to the cement content may be calculated from the equation.

$X = \frac{y - 8.38}{0.27}$ deduced from the equation for the straight line

$$y = 0.27x + 8.38$$

The values corresponding to each Rotary mix are given in Table 12. The figures used to calculate the percentage values in Table 12 are in fact lower cement content than would have been expected for that compressive strength from the graph 7.12 hence this argument that high cement contents have been used is not valid.

MIX	TIME (sec)	CEMENT content %	ACTUAL COMP. ST	CALCULATED COMP.ST
1	10	17.28	29.07	32.96
1	20	17.47	29.39	33.66
1	30	16.64	32.94*	30.59
3 MOD	10	21.60	48.01	48.96
3 MOD	20	21.42	48.86*	48.29
3 MOD	30	21.05	48.32	46.92
3 MOD	60	21.87	46.72	49.96

* indicates value used to calculate values in Table 11

COMPRESSIVE STRENGTH IN N/mm^2

Table 12

7.18 FURTHER WORK

Two avenues of further work were indicated by the conclusions in 7.17. These are:-

a) The further development of the Rotary mixing machine is indicated based upon its overall performance in the test program.

b) The further investigation of the Cumflow mixing action in particular the method of introduction of water to the pan and the star/pan speed combinations which would give the best overall mixing action.

8.0 ROTARY MIXING MACHINE, DEVELOPMENT AND MATHEMATICAL MODEL

Introduction

The Rotary mixing machine was initially developed as a student project at the Engineering Design Centre, Loughborough University. A prototype machine was developed in order to test various combinations of rotor and stator and to develop an effective sealing system. The results of the project testing were inconclusive, the mixing action was found to be very sensitive to both disc speed and mix changes, but a limited degree of success was achieved by using a shaped stator, this development came at the end of the project and time was not available to permit further development.

The initial requirement was to develop the prototype machine to a stage where it could reliably take part in the main mixer test program. This was achieved and the mixer took part in the tests, the results indicated that further development was required to allow a reasonable judgement on this principle of mixing to be made.

In addition to the mixing tests, a mathematical model of the action was initiated and this in turn indicated further areas of testing, mainly to verify the model results and to refine the empirical constants used in the model. The original concept of the model was to allow predictions to be made of the power requirements for larger size mixers, but the effect of the overall shape of the machine was also included.

8.1 OBJECT OF THE TESTS

The test program was divided into four phases, the work carried out in each phase was broadly indicated by the results of the work and modelling in the previous phase.

A brief summary of each phase is given below, and the path of development is shown in the logic diagram, Fig. 37.

8.1.1 Phase 1

The initial phase of the test program is concerned with the development and recommissioning of the prototype machine to allow its use in the main mixer test program. An initial attempt was made to formulate a mathematical model but was terminated due to lack of suitable data.

The specific power levels of the Rotary machine were below those of the present range of mixing equipment for a given output rate, and the quality of mixing, as indicated by ingredient distribution and compressive strength of the cured concrete was superior to that produced by other mixers. This indicated that the machine had good potential and warranted further development.

8.1.2 Phase 2

In order to progress the mathematical model further, additional data was required on the power consumption for various consistencies of concrete, allied with this a more reliable method of recording the power used was needed. A new disc covering material had been found and preliminary static tests had indicated that it had a high wet friction coefficient and hence would remove the necessity for drive off bars.

8.1.3 Phase 3

Phase 3 was used to determine the maximum capacity of the machine and its associated power consumption. In addition the volume and pressure of air needed to seal the air gap was quantified, also the operation of the power discharge system was confirmed as satisfactory.

8.1.4 Phase 4

The capacity of the machine was increased by modifying the stator radius r, shown in Fig. 43 from 0.127 m to 0.152 m. The power increase

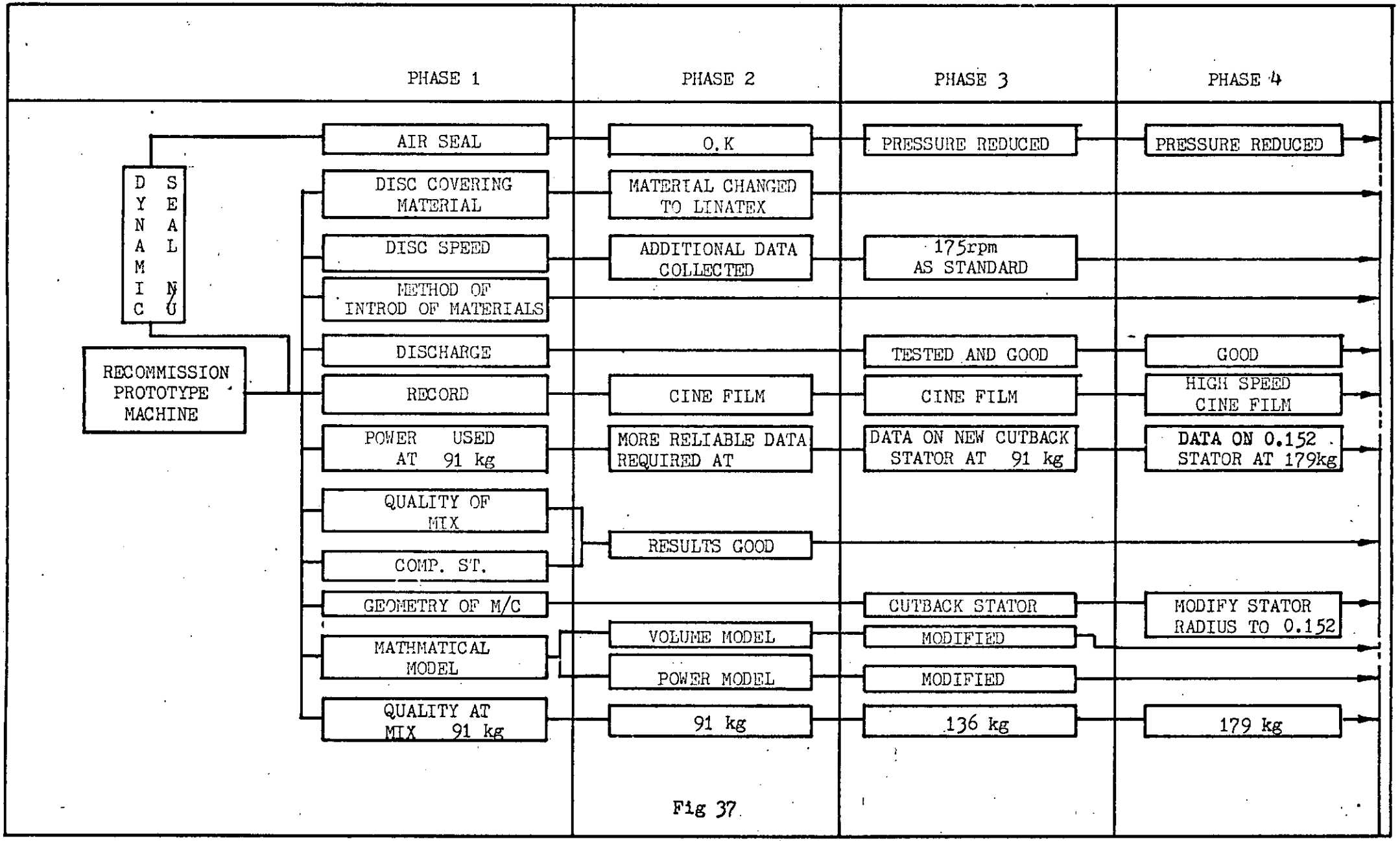
PHASE 1
PHASE 2
PHASE 3
PHASE 4
DYNAMIC SEALING
RECOMMISSION PROTOTYPE MACHINE
AIR SEAL
O.K
PRESSURE REDUCED
PRESSURE REDUCED
DISC COVERING MATERIAL
MATERIAL CHANGED TO LINATEX
DISC SPEED
ADDITIONAL DATA COLLECTED
175rpm AS STANDARD
METHOD OF INTROD OF MATERIALS
DISCHARGE
TESTED AND GOOD
GOOD
RECORD
CINE FILM
CINE FILM
HIGH SPEED CINE FILM
POWER USED AT 91 kg
MORE RELIABLE DATA REQUIRED AT
DATA ON NEW CUTBACK STATOR AT 91 kg
DATA ON 0.152 STATOR AT 179kg
QUALITY OF MIX
RESULTS GOOD
COMP. ST.
GEOMETRY OF M/C
CUTBACK STATOR
MODIFY STATOR RADIUS TO 0.152
MATHMATICAL MODEL
VOLUME MODEL
MODIFIED
POWER MODEL
MODIFIED
QUALITY AT MIX 91 kg
91 kg
136 kg
179 kg

Fig 37

associated with this change was recorded. In addition, a series of high speed photographic records of the mixing action were taken.

8.2 Phase 1

The Rotary mixing machine uses a new concept in the mixing of concrete. The principle used is that of a spinning disc inside a stationary wall or stator. The mix is thrown in an outward direction by the centrifugal force imparted to it by the spinning disc, as the mix meets with the stator the outer layers are slowed down, causing a velocity gradient through the mix, this gives a layer upon layer mixing action, but in addition to this, the whole mix rotates forming a toroidal action.

8.2.1 Prototype Mixing Machine

The prototype machine was developed as a part of the student project (52), a section through the machine is shown in Fig. 38.

The machine consists of a cylinder made up of rings, this was to allow the fitment of a range of discs and stators. The disc is driven by a hydraulic motor mounted in the cylinder base, the disc is then screwed directly on to the top of the hydraulic motor. The power for the motor is supplied by a power pack, this contains 9.22 kW electric motor which drives a variable displacement hydraulic pump, this allows the disc to be driven at any speed between 0 and 350 rpm. The actual speed of the disc is monitored by a transducer and digital frequency meter.

8.2.2 Bowl Shape

The student project had some degree of success, which had been achieved with a shaped stator made from chicken wire and plastic body filler.

The initial part of the development program was to design and manufacture a more durable stator of a similar shape to that developed by the project group. It was decided that the rotor/stator interface should give

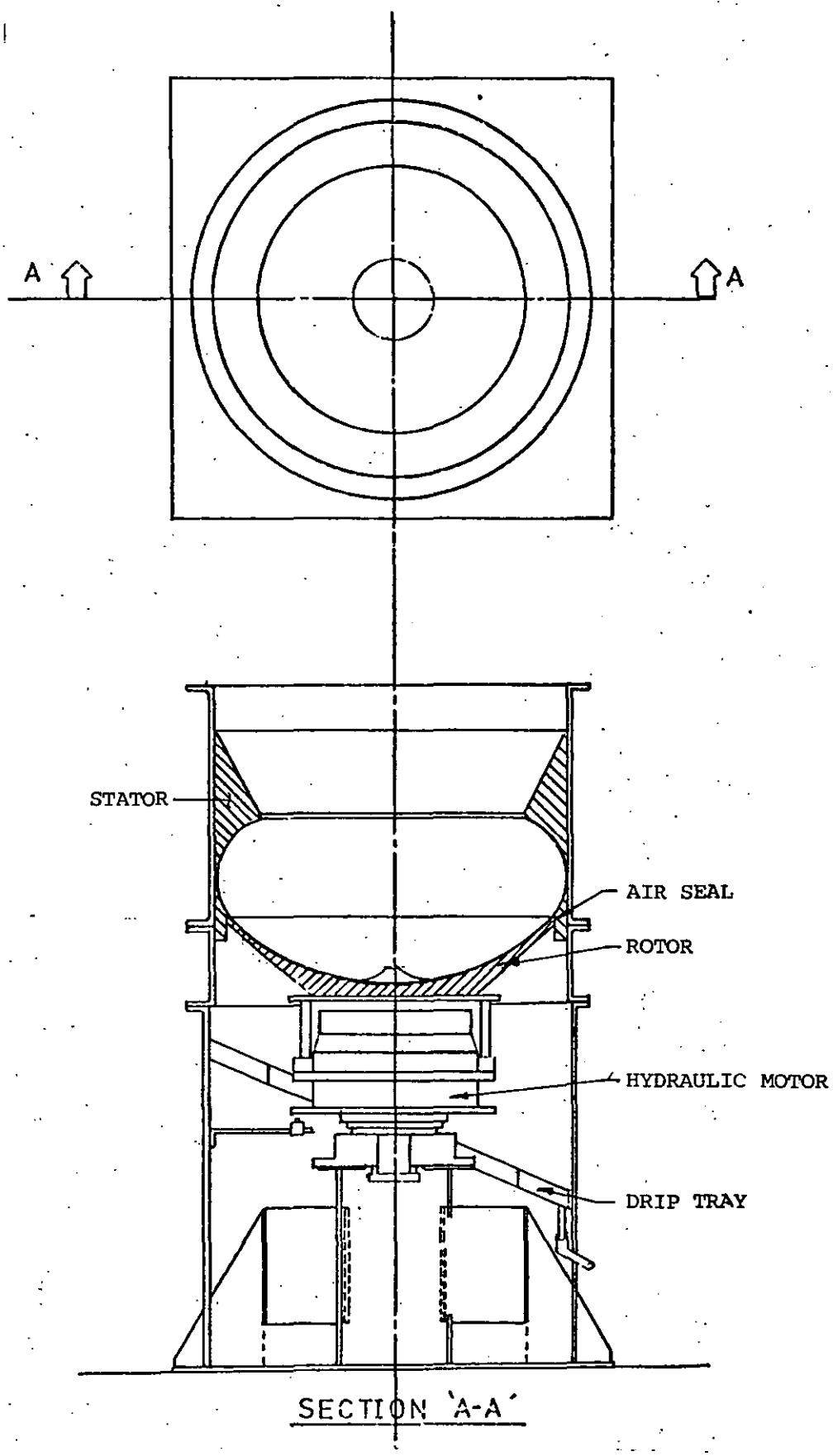
A
A
STATOR
AIR SEAL
ROTOR
HYDRAULIC MOTOR
DRIP TRAY
SECTION 'A-A'

Fig. 38

a smooth a transition as possible, this was to promote the free flow of materials across the air gap between rotor and stator. It was hoped at this time that the dynamic action of the mix crossing the gap would form a seal and prevent leakage of the ingredients. The new design of the rotor stator was detailed and the company commenced manufacture. They were manufactured in cast iron and then machined to their final dimensions. The castings were deliberately designed to be of ample dimensions, in order to allow for any modifications found necessary during the test program. The final bowl dimensions are detailed in Fig. 39 and on Drg. 75/W/005. The disc was covered in polyurethane sheet as per the final state in the student project.

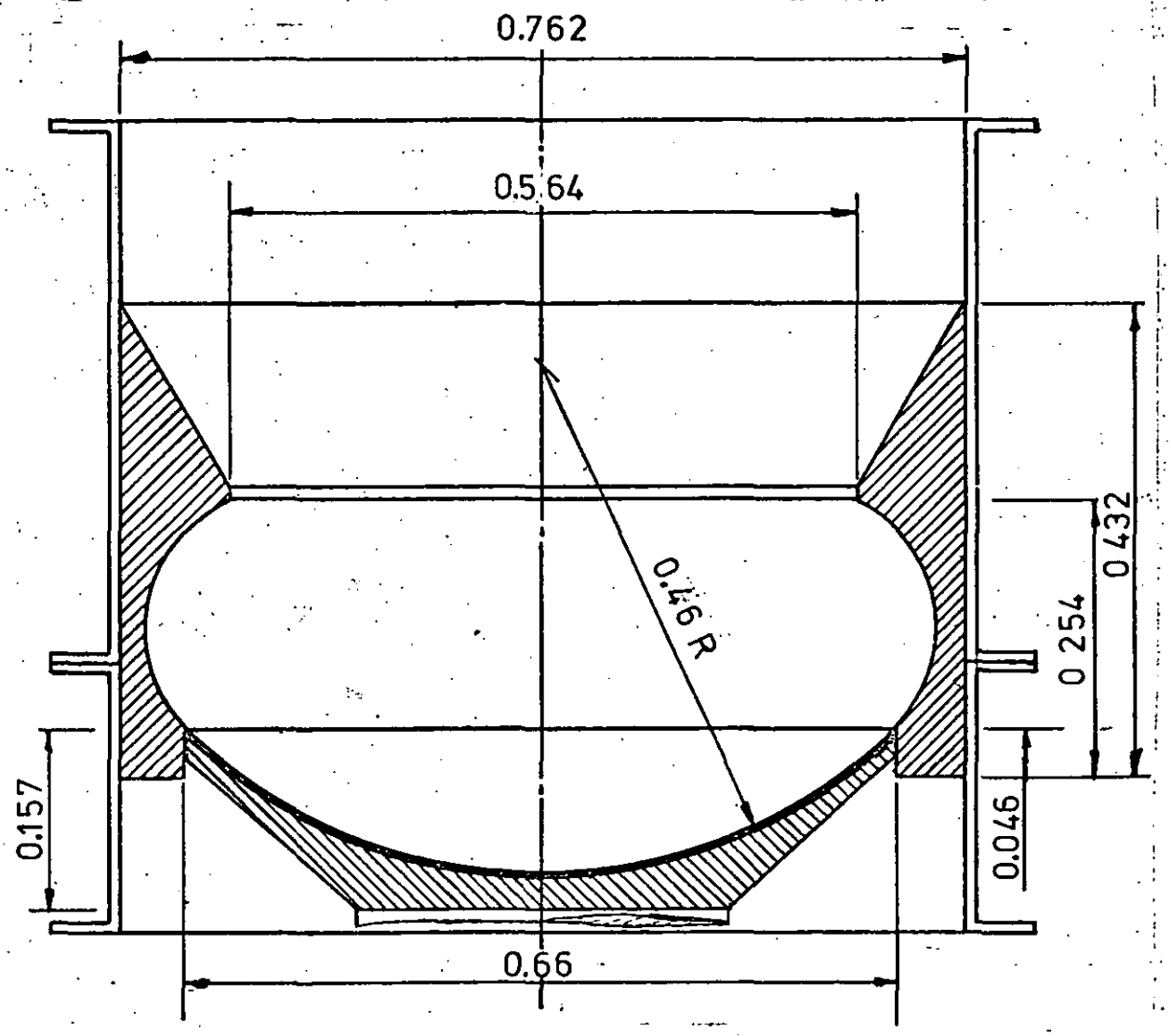

Fig. 39

8.3 RECOMMISSIONING AND TEST PROGRAM

The machine was rebuilt with the redesigned rotor and stator, the drive system was overhauled and the machine checked for correct operation. The optimum method of operation for the Rotary mixing machine was not known at the start of the test program and was developed during the course of testing. The mixes used were the same as those used in the main mixer test program.

An initial trial period was used to determine the operating characteristics of the new shaped bowl. Details of this initial testing and of subsequent developments are detailed below.

8.3.1 Initial Tests

To ascertain the formation of a toroidal mixing action 30 kg of dry 10 mm aggregate was added to the bowl and the disc started, a toroid was formed at 100 rpm. and remained stable up to the maximum speed of the machine. (350 rpm.) With the machine working, 30 kg of sand was added to the 10 mm aggregate, this had little effect upon the mixing action but a large leakage rate was noted, approximately 3 kg/min.

In order to determine the mixing of concrete, the cement and water were added to the 60 kg of aggregates, the wet mix collected around the upper profile of the stator, with a small toroid being maintained in the base of the mix. (Fig. 40.) The losses through the gap were small. More water was added to the mix and the mass collected around the top profile of the stator started to droop, but did not fully return to the mix. The addition of water increased the losses through the air gap, in fact all the fine material was lost in 5 minutes mixing.

At this stage the action was analysed and it was considered that the friction on the rotor was too low and that there was insufficient force to drive the mix across the gap and round the stator profile.

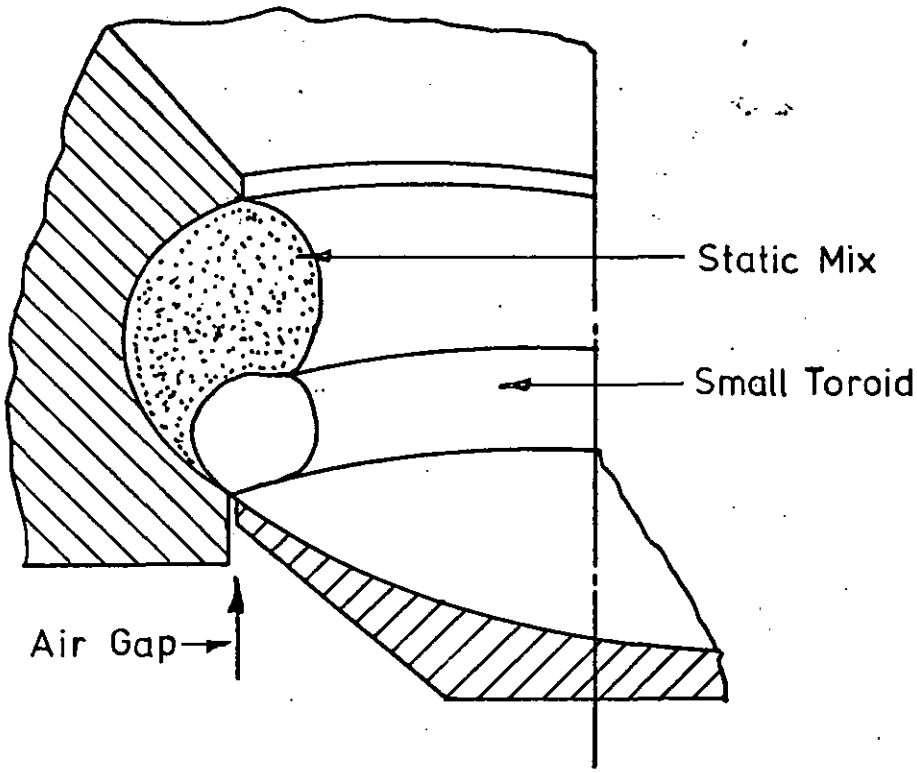

Fig. 40

8.3.2 Increase in the "μ" Value of the Disc

In order to achieve a higher "drive off" from the disc the outer periphery was roughened using a rotary file. The mix was then restarted and an improvement was noticed, but soon returned to the previous state. Inspection of the disc showed that the abrasion had worn smooth.

As a more permanent way to increase the drive off force from the disc, drive off bars were fitted, these were 152 x 19 x 6 mm thick rubber bars positioned at 60° intervals around the disc. This improved the mixing action making it more intensive, but still not allowing a full toroid.. Again the action was studied and the new problem appeared to be the sticking of the mix to the stator face.

To prevent this drag a breaker bar of the same dimensions as the drive off bars was fitted vertically up the stator profile, the idea being to break the sticking and allow the mix to toroid. The mixer was then

restarted and the required toroid was formed. The rubber bars had a short life and were soon replaced by similar ones made of mild steel, these were screwed to the rotor and stator, Fig. 41.

The mixing was again tried with the bars and these resulted in a more intensive mixing action at lower rotor speeds, together with a fully formed toroid with the drier mix. The only disadvantage was the increase in loss through the air gap. This was expected due to the interruption of smooth flow across the gap.

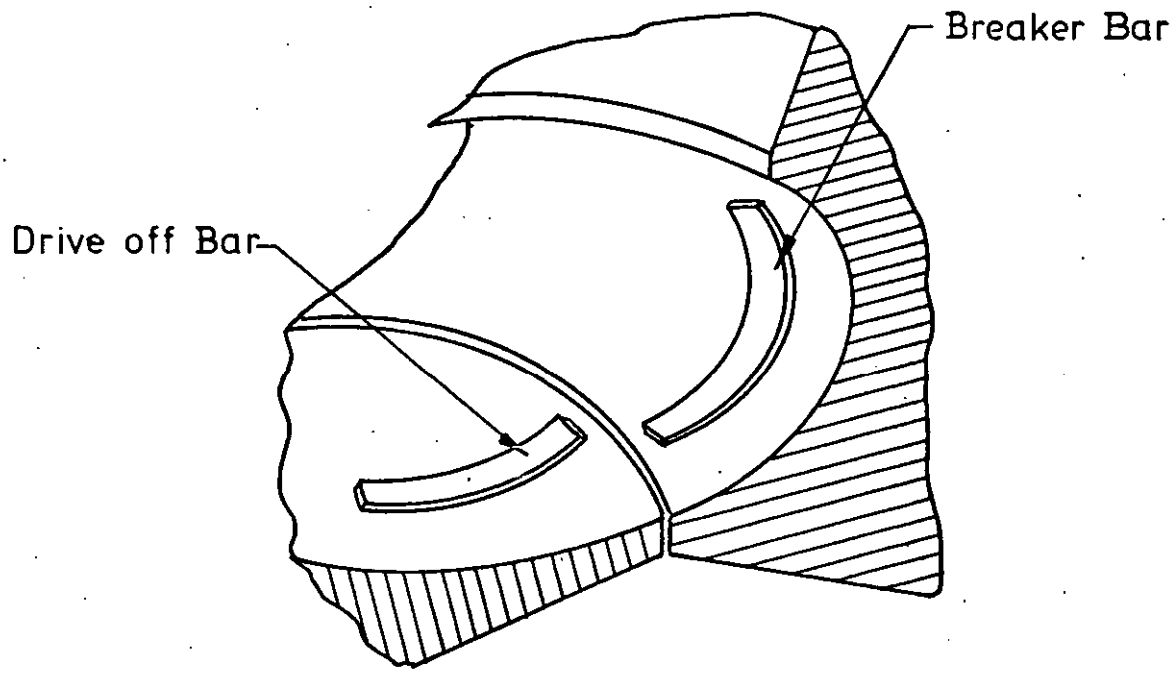

Fig. 41

8.3.3 Air Seal

The material passing through the air gap was mainly fines and cement, from an analysis of the material deposited below the rotor it was obvious that a grinding action was also taking place, presumably in the gap. The samples method of stopping this leakage was to prevent the fines entering the gap. It was thought that this could be achieved by blowing low pressure air through the gap, hence pushing the fines back up the gap and in fact, not allowing them to enter initially.

A study of the construction of the mixer indicated that it was sufficiently strong to accept the loadings applied by the air. So the casing of the mixer was sealed and air blown through the gap. The pressure obtained, using the shop air line, was approximately 0.15 m.w.g. The mixer was again run with the air seal in operation, and the losses were reduced to nil.

8.3.4 Mixing Speed

With the rotor drive off bars the suction breaker and air seal in operation, several disc speeds were tried. The original tests had been carried out at a speed of 250 rpm but it was found that this could be reduced to 175 rpm and still maintain a satisfactory mixing action.

8.3.5 Introduction of Materials

Several methods of material introduction were tried, but the most satisfactory seemed to be, add all the dry materials, with the mixer stationary, in the order below:

1) 10 mm aggregate
2) 20 mm aggregate
3) Fine aggregate
4) Cement.

Then start up the mixer and set rotor speed at 175 rpm add the water down the centre of the mix on to the rotating disc. Mix for the required time and stop. This method was satisfactory for all consistencies of concrete tested.

8.3.6 Power Used by Rotary Mixers

The power used in mixing with the Rotary mixer may be calculated by noting the pressure differential across the pump and then calculating the power from the following formula.

$$\text{Power} = \frac{2.\pi.n_p.T}{60}$$

In the case of this hydraulic circuit,

$$T = 0.000274\ (P-p)\ \text{N m}$$

$$\text{Power} = \frac{2.\pi.\ n_p(0.000274\ (P-p)\ )}{60}\ \text{Watts}$$

The powers are calculated for the machine when mixing and in the no load condition; this allows the power used in mixing alone to be calculated. This was calculated at various disc speeds and the results are summarized in Table 13 and a curve of the power used in mixing is shown in Plot 8.1.

Rotor Speed R.P.M.	No Load Power kW	Total Power During Mixing kW	Power Used in Mixing kW
0	0	0	0
50	0.30	0.49	0.19
100	0.75	1.30	0.56
150	1.31	2.43	1.12
200	2.09	4.14	2.05
250	3.21	6.34	3.13
300	4.55	8.95	4.40
350	6.19	12.38	6.19

Power used in mixing 91 kg of concrete

Table 13

8.3.7 Main Mixer Test Program

At this stage of development, the Rotary machine was considered to be reliable enough to take part in the main test program. Details of the methods and mixes used, together with the methods of analysis and results are given in Section 7.

A brief summary of the final conclusions from the tests are given below.

Quality of Mixing

The indications from all the comparisons of the present Liner range of mixers and those of the competition are that the concrete produced by the Rotary mixer is of as good a quality and in most cases better than the present mixers.

Energy Consumption

The specific energy consumption by the Rotary mixing machine is lower than that consumed by the Cumflow, by a factor of 2.27 for the same or increased quality of mix.

Possible Capacities

The hourly output of the Cumflow assuming a 180 sec cycle time is 6.71 m^3/hr. This cycle time gives concrete of equal quality to that produced in the Rotary machine.

The output of the prototype Rotary mixer would depend upon the input/output equipment, but a cycle time per batch of between 20 and 30 seconds should be possible. The curve shown in Plot 7.33 gives the output for a given cycle time using the prototype mixing machine, with 91 kg batch. If the prototype could be designed to cater for its original design capacity of 200 kg/batch, the second curve (dotted) would be possible. To equal the R.P. 550 capacity with the 91 kg machine, a cycle time of 21.5 secs is needed, but with the 200 kg/batch, a cycle time of 41.5 secs would equal that of the Cumflow.

Compressive Strength

From the test results the plot of compressive strength plotted against mixing time in seconds was produced, Plot 7.34. As can be seen from the graph the Rotary machine has produced concrete of a higher strength, this is true in both mix designs and the higher quality was produced in a shorter mixing time.

Further Work Indicated

In considering the above conclusions, it was considered necessary to gain a better understanding of the method of mixing used in the Rotary machine and thus be better able to predict the shape and power requirements of larger machines based on the prototype design and development to date.

8.4 MATHEMATICAL MODEL

In order to construct a mathematical model of the mixing action, it is first necessary to broadly define the objectives of such a model. In this case the basic objectives were:-

a) To obtain a relationship between mix volume, machine dimensions, rotor speed and power input of the prototype mixing machine.

b) To determine the effect of mix consistency on the above relationship.

c) To predict the power requirements of mixing machines of different capacities to that of the prototype.

8.4.1 Review of Information

The information known about the Rotary machine and its mixing action is summarized below.

Dimensions

The dimensions of the prototype machine are shown in Fig. 39 and are detailed in the individual drawings of each component.

Capacity

The prototype was designed to the development details obtained from the original test program, and hence no specific volume (capacity) was aimed at. (The original machine was designed to have a capacity of 0.085 m^3 that is 200 kg of concrete.)

On completion of the initial testing of the recommissioned prototype the most suitable capacity for the machine was found to be 0.038 m^3 of mixed concrete, this gives a mass of 91 kg, that is 0.05 m^3 of unmixed ingredients. The choice of this figure is based on the best toroid action obtained, this being judged by eye and not by any quantitative means.

NOTE: The choice would appear to be confirmed by the quality of mix subsequently tested and analysed.

Speed of Disc

The speed of the disc again judged by eye and a speed selected which gave the best mixing action with the minimum speed. This speed proved to be 175 rpm. It was noted that any decrease from this speed, the disc did not self clean and with speeds above this figure, no visible improvement in the mixing action took place.

Quality of Concrete

Using the above capacities and disc speeds, the concrete mixed was of comparable quality with the other machines tested and was in most cases superior, hence it is concluded that the speed and volume used was reasonable, perhaps not the ultimate, but will be considered as the lowest speed and hence power to give an acceptable quality mixing action.

8.4.2 Cine Film

A record of the mixing action using a range of material combinations was made by taking 8 mm cine film of the machine in action. This overcame the major problem with the machine that is, its speed of mixing, it is very difficult to observe the mixing action. To allow a better understanding most of the film was taken in slow motion (36 frames/sec as against 18 frames/sec for normal filming), this can then be projected at 6 frames/sec giving a total reduction of six times the normal speed. At this speed

the mixing action can be observed in detail, and also an idea of the relative speeds of both the mix and the disc can be obtained.

8.5 CAPACITY MODEL

To be able to calculate the capacity of larger mixing machines, a model of the machine capacity was constructed. By viewing the mixing action on the cine film, the approximate volume was suggested by the shaded area in Fig. 42.

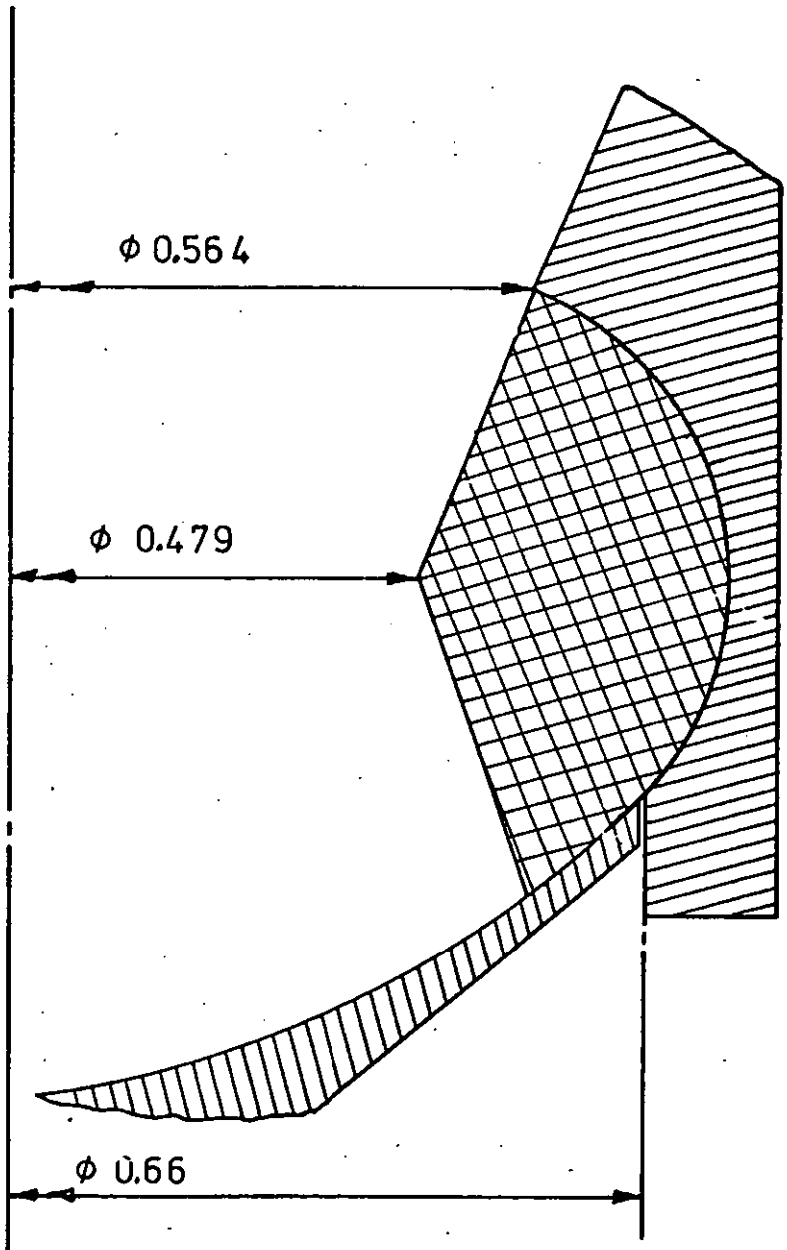

Fig. 42

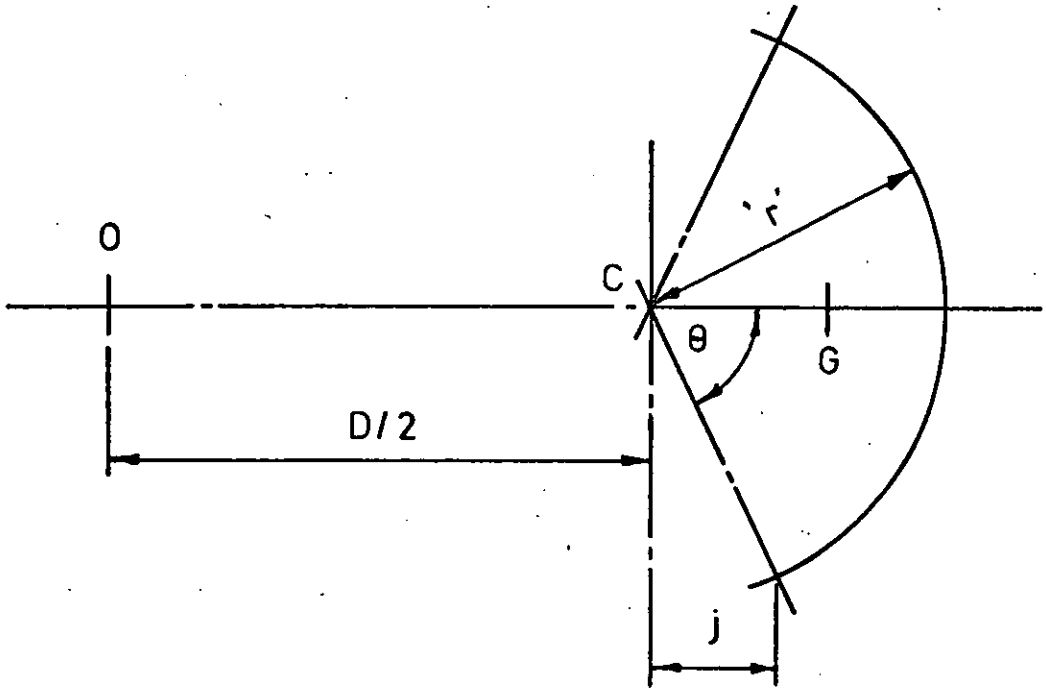

Fig. 43

To find the volume of the solid generated by this sector using Pappus theorem.

$$V = \text{Area} \times \text{length of path of its mean centre}$$

$$V = 2\pi \,.\, OG \times A$$

In this case,

$$A = r^2\theta$$

Position of mean centre

$$OG = OC + CG$$

$$OC = \frac{D}{2}$$

$$CG = \frac{2}{3}.r.\frac{\sin\theta}{\theta}$$

$$\therefore \quad V = 2\pi r^2\theta\left[\left[\frac{2}{3}.r.\frac{\sin\theta}{\theta}\right] + \frac{D}{2}\right] m^3 \quad \text{——— (1)}$$

To find θ

$$j = 0.282 - 0.240 = 0.042 \text{ m}$$

$$\therefore \quad \theta = \cos^{-1} \frac{0.042}{0.127} = 70.5^{\circ} \equiv 1.23 \text{ rad}$$

$$\therefore \quad V = 2\pi \times 0.127^2 \times 1.23 \left[\left[\frac{2}{3} \times 0.127 \times \frac{\sin 70.5}{1.23} \right] + \frac{0.479}{2} \right] m^3$$

$$\underline{\underline{V = 0.038 \ m^3}}$$

To check this model against the actual volume achieved in the mixing tests

Weight of mix = 91 kg

Density 2350 kg/m^3

$$\therefore \quad \text{Volume} = \frac{91}{2350} = \underline{\underline{0.038 \ m^3}}$$

$\therefore$ The model is seen to be accurate in this case.

8.6 POWER MODEL

In order to construct the power model, the variables which affect the mixing action and hence the power requirements may be listed. The variables may be divided into those which are known and those which are not. These variables are listed below, under their respective headings.

8.6.1 Known Variables

1) The power used in mixing at various speeds.
2) The mass of the mix.
3) The maximum aggregate size.
4) The approximate shape of the toroid, (wet and dry).
5) The approximate value of the coefficient of friction of the stator.
6) The approximate value of the coefficient of friction of the rotor.

8.6.2 Unknown Variables

1) The fundamental properties of the mix, this is that with the addition of any of the constituents the fluid properties may change. The most marked effect is that of the change of the quantity of water; changes in the quantities of other ingredients may alter the harshness of the mix.

2) The relative coefficient of friction for each type of mix and the disc or stator material.

3) The basic mixing action and how it produces the quality of mix.

8.6.3 Mixing Process

The basic mixing process uses the action of centrifugal force to throw the mix up the stator and then it falls back on to the disc, and hence repeats the process. If we consider the process as having three separate parts, that is:

a) The rotor

b) The stator

c) The mix.

There is obviously a connection between each part and so the study of the interfaces between the separate parts may indicate a possible approach to a mathematical model.

8.6.4 Rotor/Mix Interface

The first approach was made through this interface, Fig. 44. A thorough investigation was carried out by considering the balance of forces on a particle, the forces considered to be produced by gravity on the one hand, and by centrifugal force on the other. This did not yield any useful answers.

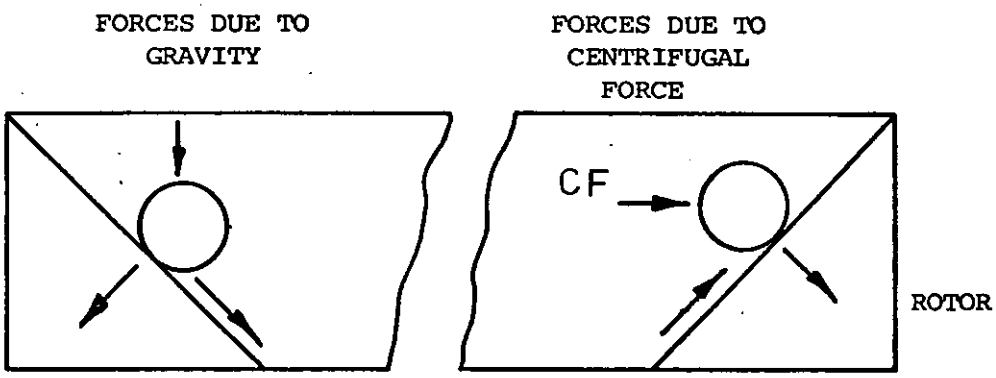

Fig. 44

8.6.5 Mix/Stator Interface

The power used in the mixing process may be considered constant after the initial dry/wet phase. This is indicated by the constant power values noted in the mixing tests. The mix has the toroidal (corkscrew) appearance and this may be considered to be produced by two power inputs, as the toroid rotates in two planes (Fig. 45), in the direction of the large diameter at a speed of w_R and in the direction of the small diameter at a speed of w_r .

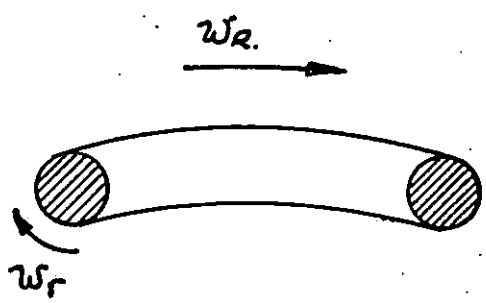

CROSS-SECTION THROUGH TOROID

Fig. 45

Consider the power balance of the system.

The total power in the system is made up of three parts:-

1) The power due to the mix rotating in the direction w_R.

2) The power due to the mix rotating in the direction w_r.

3) The power due to gain in height from the bottom to the top of the stator.

If the system was frictionless it would need no replenishment, but this is not the case, so the power required to maintain the system in a steady state is that which is used to overcome friction and to change the vertical position of the mix.

Hence, the total power balance is

Input = Output

Input is the power in watts

and the output = Power used to overcome friction + power used to gain height.

8.6.5.1 Power due to Rotation of mix in w_R direction

The C.F. produced due to the rotational velocity w_R will be:

$$C.F. = W. w_R^2 . R_R \quad \text{Newtons}$$

The value R_R is the effective radius of the mix. This dimension is considered to be measured to the centre of gavity of the arc (MH) (Fig.46) of the circle subtended by the angles γ and Ω.

This is considered to be a more valid position than that of the centre of gravity of the mix as the force is actually applied to the stator at the mix stator interface and not at the c of g of the mix, i.e. the mix interface forms a cylinder of Radius R_R .

The position of this centre will not be on the horizontal line (CJ) unless $\gamma = \Omega$. but in most cases this is not so, hence a general equation is derived.

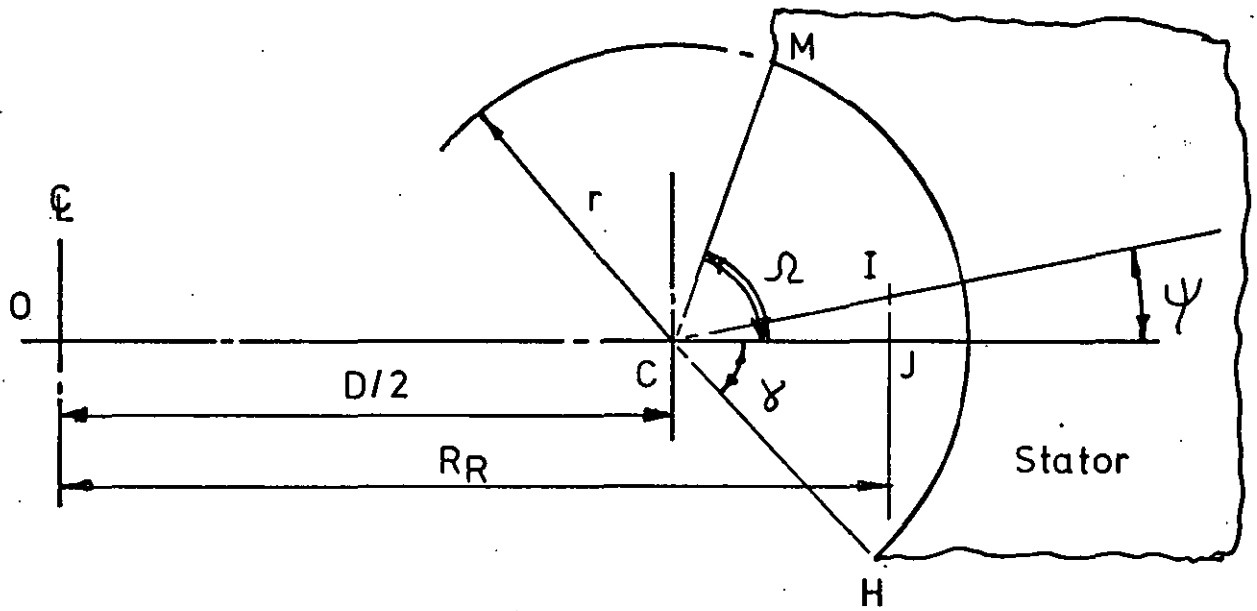

Fig. 46

The position of the centre of gravity is given by the expression

$$CI = \frac{r.\ \text{Sin}\left(\frac{\Omega+\gamma}{2}\right)}{\frac{\Omega+\gamma}{2}}$$

also $\psi = \gamma - \left(\frac{\Omega+\gamma}{2}\right)$

Note sign of ψ indicates position above or below horizontal axis.

Now length CJ $= \text{Cos}\ \psi \left[\frac{r.\ \text{Sin}\left[\frac{\Omega+\gamma}{2}\right]}{\frac{\Omega+\gamma}{2}}\right]$ m

But length $R_R = CJ + \frac{D}{2}$

$\therefore$ General Equation

$$R_R = \left[\cos\psi \left[\frac{r.\ \sin\left(\frac{\Omega+\gamma}{2}\right)}{\frac{(\Omega+\gamma)}{2}} \right] \right] + \frac{D}{2} \quad M \text{ --------- } (2)$$

The retarding force due to the C.F. from w_R and μ_s on the stator is given by:-

$$F_{w_R} = W.\ w_R^2.\ R_R.\ \mu_s \qquad \text{Newtons}$$

In each second of mixing this force will move through a distance U.N.

where U = distance moved in one revolution of mix in w_R plane

N = number of revolutions of the mix in w_R direction in 1 second

$$\therefore \text{ Power} = W.w_R^2.\ R_R.U.N.\mu_s \qquad \text{watts} \text{ ---------- } (3)$$

8.6.5.2 Power due to rotation of mix in w_r direction

Now consider the rotation of the mix about its axis 'r' again the retarding force due to the C.F from w_r and μ_s on the stator will be

$$F_{w_r} = W.w_r^2.r.\mu_s \qquad \text{Newtons}$$

In each second of mixing this force will travel through a distance d.n.

$$\therefore \text{ Power} = W.w_r^2.r.d.n.\mu_s \qquad \text{watts} \text{ ---------- } (4)$$

8.6.5.3 Power due to repositioning of mix

The remaining part of the power balance is that due to the potential energy gained when the mix is repositioned from the bottom to the top of the stator.

$$\text{Power} = W.g.h.n. \qquad \text{watts} \text{ ---------- } (5)$$

For h see Fig. 46

8.6.5.4 Power Balance

The power used in mixing must equal the power input to the mixer (less hydraulic losses, etc.).

$\therefore$ Input power = Power ω_R + Power ω_r + Power$_h$

$\therefore$ Input power = $(W.\omega_R^2.R_R.U.N.\mu_s) + (W.\omega_r^2.r.d.n.\mu_s) + Wghn$ --- (6)

But $U = 2.\pi.R_R$

$N = \dfrac{\omega_R}{2.\pi}$

$\omega_r = 2.\pi.n$

$d = (\Omega+\gamma)\ r$

By putting these values in (6)

$\therefore$ Input power = $(W.\omega_R^2.R_R.2\pi.R_R.\dfrac{\omega_R}{2\pi}.\mu_s)$ +

$(W.(2\pi n)^2.r(\Omega+\gamma).r.n.\mu_s)$ + W.g.h.n.

Input power = $W_{\mu_s}\ (\omega_R^3.R_R^2. + 39.5n^3r^2(\Omega+\gamma))$ + W.g.h.n. --- (7)

This equation represents the general case of the model, but by including values for R_R, h and $(\Omega+\gamma)$ it may be made specific for the present machine.

Consider angle γ, Fig. 47.

In CEH

EC = 0.33 - 0.239

= 0.091

CH = 0.127 = r

$\therefore$ $\cos\gamma = \dfrac{0.091}{0.127} = 0.718$

$\gamma = 44.1^\circ$ (0.77 rad)

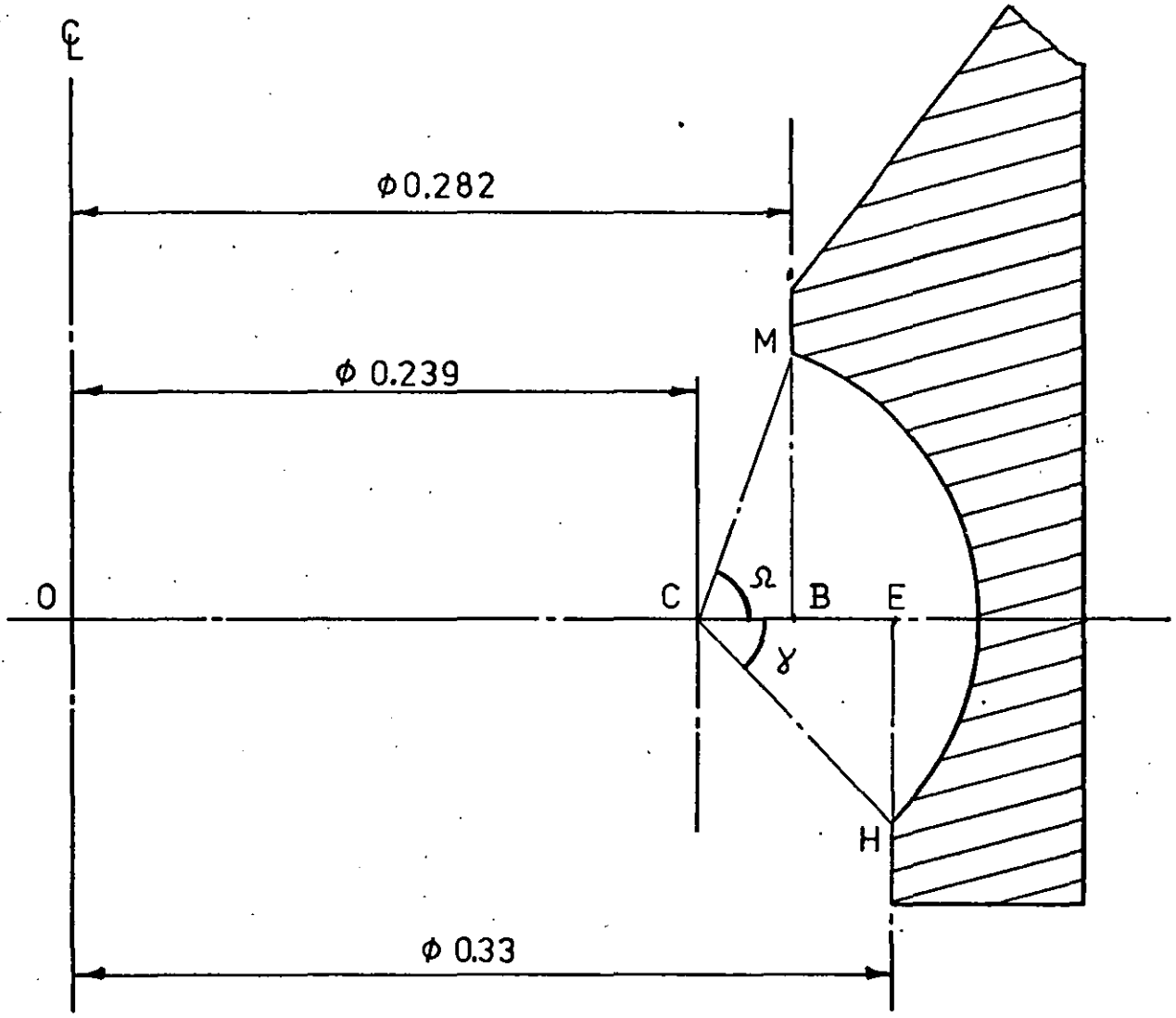

Fig. 47

Consider angle Ω , Fig.47.

In CBG

$$BC = 0.282 - 0.239$$

$$= 0.043$$

$$CM = 0.127 = r$$

$$\therefore \cos\Omega = \frac{0.043}{0.127} = 0.338$$

$$= 70.3^{\circ} \text{ (1.23 rad)}$$

Consider height h - being the height gained by the mix in moving from the rotor to the top of the toroid, this may be calculated from Fig. 48.

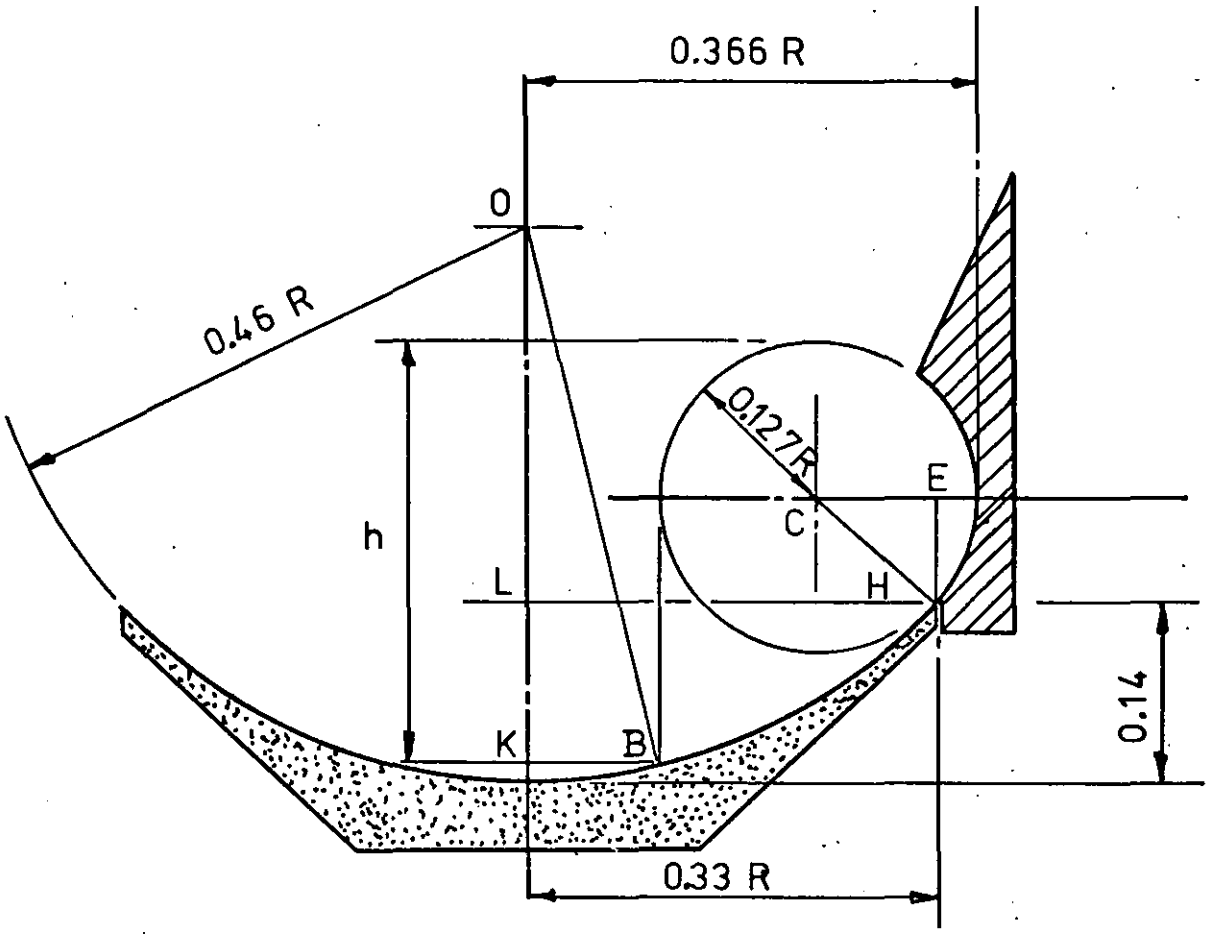

Fig. 48

In Δ OKB

$$KB = 0.366 - 0.254 = 0.112$$

$$OB = 0.46$$

$$\therefore \quad KO = \sqrt{OB^2 - KB^2}$$

$$= \sqrt{0.46^2 - 0.112^2}$$

$$= 0.446$$

$$\therefore \quad KL = 0.446 - (0.46 - 0.14)$$

$$= 0.126$$

$$HE = \sqrt{0.127^2 - (0.33 - 0.24)^2}$$

$$= 0.09$$

$$\therefore \quad h = 0.126 + 0.09 + 0.127$$

$$\underline{\underline{h = 0.343 \quad m}}$$

Consider R_R

From Equation (2)

$$R_R = \left[\cos\psi \left[\frac{r.\sin\left(\frac{\Omega + \gamma}{2}\right)}{\frac{(\Omega + \gamma)}{2}} \right] \right] + \frac{D}{2}$$

$$\psi = \gamma - \frac{(\Omega + \gamma)}{2}$$

$$\gamma = 44.1^\circ \quad (0.77 \text{ rad})$$

$$\Omega = 70.3^\circ \quad (1.23 \text{ rad})$$

$$\therefore \quad \psi = 44.1 - \frac{(70.3 + 44.1)}{2}$$

$$\underline{\underline{\psi = -13.1^\circ \text{ (above horizontal)}}}$$

$$r = 0.127$$

$$D = 0.479$$

$$\therefore \quad R_R = \cos 13.1 \left[\frac{0.127.\sin\left[\frac{70.3 + 44.1}{2}\right]}{\frac{1.23 + 0.77}{2}} \right] + \frac{0.479}{2} \quad m$$

$$\underline{\underline{R_R = 0.34 \text{ m}}}$$

8.6.5.5 Missing Link

In the model so far developed, the remaining unknowns are w_R, $w_r(n)$ and μ_s. In viewing the cine film of the mix, it was noted that the mix formed a definite angle, Fig. 49. If it is assumed that this is the angle at which the mix descends from the top of the toroid, and the only

force acting on the mix in a downward direction is gravity and in the forward direction, forces due to the rotation of speed at w_R then it is possible to estimate w_R.

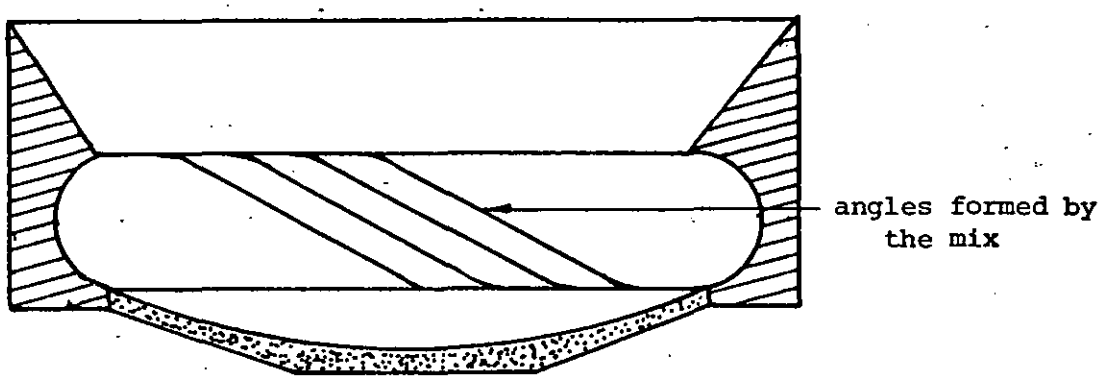

View on mix from centre of rotor

Fig. 49

First consider the time space formula:

$$S = \frac{1}{2} g t^2$$

where S = distance

g = acceleration due to gravity

t_m = time

Transposing the formula

$$t_m = \sqrt{\frac{2 \times S}{g}}$$

In the case of the prototype mixer the height

$S = 0.305$ (measured from cine film)

$g = 9.81 \text{ m/s}^2$

$$\therefore t_m = \sqrt{\frac{2 \times 0.305}{9.81}}$$

$$t = 0.25 \text{ secs}$$

The path of the particle may be represented by the line in Fig. 50. If the particle travels from c to e and is then immediately transposed to

point f, by the force from the rotor, and then travels down the path f to 1, the maximum number of circuits per second would be $n = \frac{1}{0.25} = 4$.

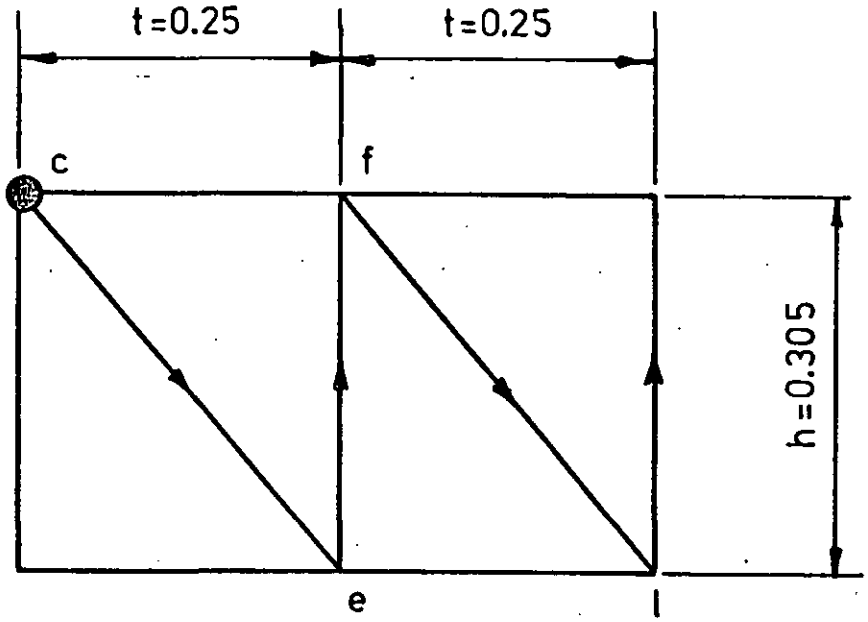

Fig. 50

In practice, the value of n would be less than 4 as the time taken to reposition the particle would have a finite value. The original theory that the stream lines in the mix, as seen on the cine film may indicate a method of determining the actual mix velocity can be pursued. In Fig. 51 a diagram of a stream line is shown as can be seen the height S = h is known (0.305), the angle β may be estimated from the slow motion cine film and the time t is found above.

If for the time being an instant repositioning of the mix is assumed, the velocity w_R may be found, thus:

From the cine film $\beta = 20^{\circ}$ (Fig. 51)

$t = 0.25$ sec

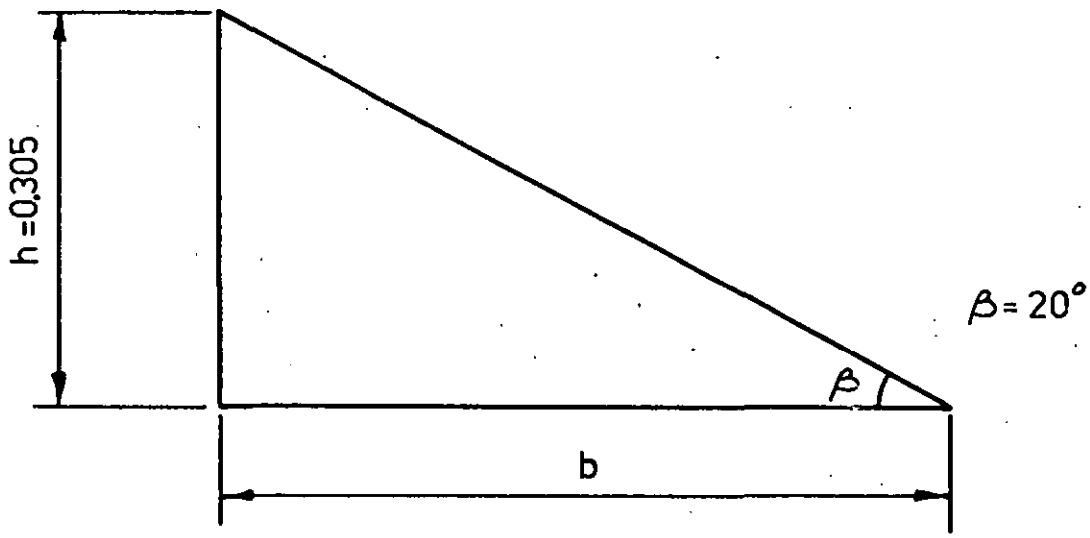

Fig. 51

∴ Referring to Fig. 51

$$b = \frac{0.305}{\text{Tan } 20^{\circ}} = 0.838$$

$$V_e = \frac{b}{t} = \frac{0.838}{0.25} = 3.35 \text{ m/S}$$

$$\omega_R = \frac{V_e}{R_R} = \frac{3.35}{0.341} = 9.82 \text{ rad/s}$$

∴ It is possible to calculate the velocity ω_R if the angle of the mix can be estimated.

Notes on the use of R_R values to calculate ω_R

In considering the value at which V_e is acting. The following options are thought to be possible.

1) To consider the mix to act at the centre of the theoretical toroid, i.e. at a distance $\frac{D}{2}$. (In the case of the prototype 0.24 m radius) from the mixer centre. The only case where this can be true is for free flowing materials and even in this case, the mixture will be

more dense at the stator profile due to the retarding action of the stator.

2) To use the position of the centre of gravity calculated by the volume model:-

$$\left[\left[\frac{2}{3}.r.\frac{\sin\theta}{\theta}\right] + \frac{D}{2}\right] \text{ m}$$

In the case of the prototype this radius is 0.30 m, the value will vary with the capacity of the mixer and will have a range between $\frac{D}{2}$ and $\frac{D}{2} + r$ (0.24 m and 0.367 m for the prototype machine). This will give differing values of $\bar{w}_R$ for different mix capacities, it was noted that by viewing the cine film this does not occur. In addition, the mix will again be compacted by the mixing action around the stator profile.

3) To consider the value of R_R, this being the radius of the frictional cylinder as defined in the power model. The use of this value has a number of benefits, these being:-

a) The value would be constant for a particular stator configuration.

b) The values of $\bar{w}_R$ would be more in line with those seen in the cine film.

c) The fact that the mix is more dense around the stator profile gives a good reason for using the larger value of radius.

To summarise, in the absence of any better information, the value R_R will be used to calculate the $\bar{w}_R$ values.

A study was made of the cine film for various mixes and the following angles (β) were noted.

1) Dry mix = 34°, slump = Not possible

2) Mix 1 = 20°, slump = 70 mm

3) Mix 3 = 23°, slump = 35 mm.

From these angles β gives certain values of w_R. Using this data and the information on the speed of the disc, a ratio may be calculated of the mix speed relative to the disc speed, this is detailed in Table 14.

MIX	SLUMP	ANGLE	w_R	DISC w
Dry (3)	*	34°	5.29	18.32
Mix 1	70 mm	20°	9.81	18.32
Mix 3	35 mm	23°	8.41	18.32

Table 14

* no slump value was known, or possible to determine but a value of 10 mm seems reasonable.

If the power equation (2) is again studied

$$\text{Input Power} = W\mu_S\left[w_R^3 R_R^2 + 39.5\, n^3 r^2 (\gamma + \Omega)\right] + Wghn$$

The known parameters are:-

W, g, w_R, R_R, r, h and input power

the remaining unknowns are μ_S and n, of these two factors μ_S will be a constant for a given mix as will the disc speed and n.

The previous work indicates that the maximum value of n = 4 and the minimum n = 0 (stationary).

It is possible by considering an extension of the method used to estimate w_R to also estimate the values of n.

Consider Fig. 52(a)

In this case the time taken for the particle to rise up the stator wall is assumed to equal that for it to descend, i.e. $t_r = 0.25$ sec.

$$\therefore\ n = \frac{1}{t_m + t_r} = \frac{1}{0.25 + 0.25} = 2 \text{ rev/s}$$

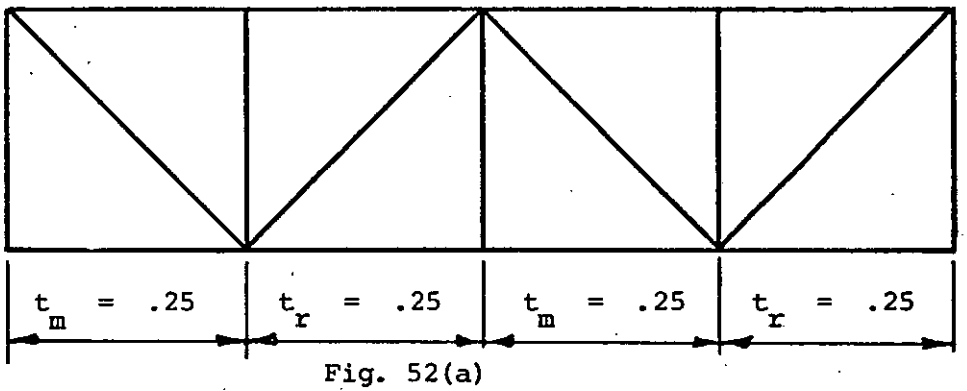

Fig. 52(a)

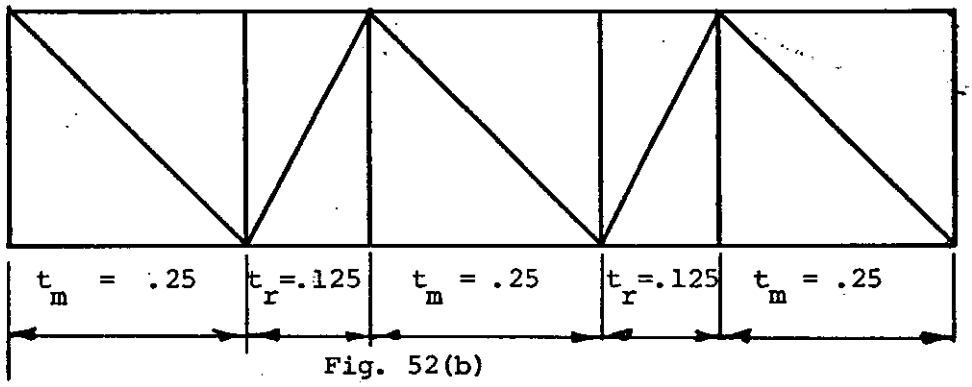

Fig. 52(b)

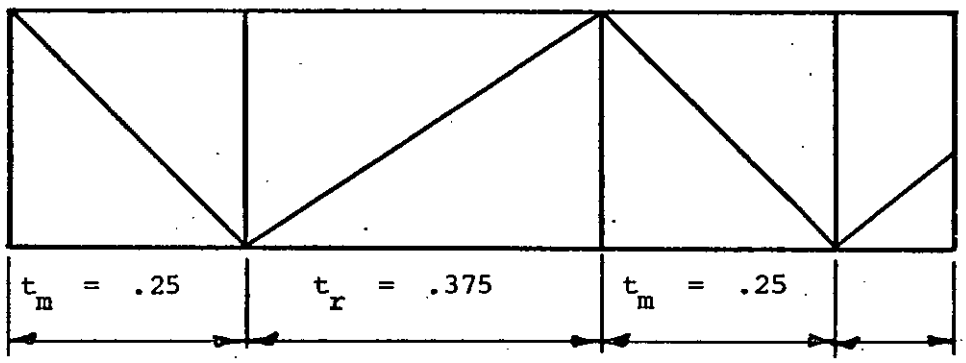

Fig. 52(c)

Fig. 52(b)

The time for the particle to rise up the stator wall is a half of its time to fall

$$\therefore \quad n = \frac{1}{t_m + t_r} = \frac{1}{.375} = 2.66 \text{ rev/s}$$

Fig. 52(c)

The time for the particle to rise is now considered to be $t_r = 0.375$

$$\therefore \quad n = \frac{1}{t_m + t_r} = \frac{1}{0.25 + 0.375} = \frac{1}{0.625} = 1.6 \text{ rev/s}$$

The time taken for the particle to rise will depend upon the fluidity of the mix and the μ of the stator walls, that is assuming constant values of rotor speed and the μ value of rotor.

At this point in the analysis it was becoming apparent that the data acquired on the Phase 1 testing was not adequate to allow a full investigation of the power consumption of the prototype to be carried out.

8.6.6 Summary of Work to Date

The main problems and limitations of the Phase 1 testing were that the accuracy of the power calculations were in doubt due to the needle fluctuations on the pressure gauges. The spectrum of mixes used on which power output information was available is limited. A new type of disc covering material was found during the course of testing, this material had improved wet friction qualities over that of the polyurethane.

With these points in mine, parameters of the Phase 2 testing were formulated.

8.7 PHASE 2

The second Phase of the tests were carried out to supplement those in Phase 1. The specific areas in which additional information was required are given below.

8.7.1 Power Recordings

The method of recording the power used in Phase 1 was not of sufficient accuracy, to improve this accuracy it was decided to fit a system of continuously recording the differential pressure across the hydraulic motor. This was achieved by the use of a U.V. recorder which measured the electrical output of two pressure transducers thus giving a continuous record in the form of a paper trace. The transducers and recording equipment were calibrated prior to use with a dead weight testing machine.

8.7.2 Disc Covering Materials

The original disc covering material was not of a high enough coefficient of friction to allow the full mixing action to develop, but was found to improve when drive off bars were fitted. To obtain an accurate comparison of these and the new material the following tests were carried out.

a) Polyurethane with Drive Off Bars

This arrangement was the same as that used in the main mixer test program, the mixes used were repeated to gain accurate power readings, also the values of slump used were extended to give additional data for the mathematical model.

b) Polyurethane Only

The drive off bars and splitter bar were removed to allow an accurate determination of the power levels used.

c) Linatex

Linatex is a material which is very hard-wearing, it is usually used to line bins and chutes to prevent wear, and has wet friction properties superior to that of polyurethane. The disc was covered with this alone, drive off bars being considered unnecessary.

8.7.3 Testing Methods

The methods of carrying out the tests were the same as those used in Phase 1. The only difference was in the mixes used, the same basic mix ingredients were used but the consistency was changed by the addition or deletion of water.

8.8 RESULTS FROM PHASE 2

The results from Phase 2 are summarized in Table 15.

8.8.1 Analysis of Results for Power Curves

The results from Table 15 have been plotted in Plots 8.2 to 8.6. These plots show the power used with various mix viscosities, disc speeds, and disc covering materials. All the plots show that as the viscosity (slump), increases, the power required drops. In a number of the curves shown the value at 175 rpm appears to be higher than for the expected value if the curve was drawn through the remaining points. The reason for this anomaly is considered to be the method of taking the readings. The records of the power were taken in the following order: 0, 50, 100, 150, 200, 250, 300, 350, 175 with the 175 readings being taken last the mix would appear to have a reduced viscosity due to the mixing action. The reduction in the viscosity will be considered to be constant and the value for 175 rpm will be corrected to the value of the best line. Where the difference is noticeable, the higher viscosity mixes appeared to have less effect. The corrected values are given in Table.15.

The values of power for each speed have been plotted against slump. It was found that the difference between polyurethane and drive off bars and the Linatex disc was small and indicated that they may be considered to give the same drive off force.

8.8.2 Linatex

The use of the new material was successful and does not need the drive off bars to give the same quality of mixing action.

8.8.3 Recording of Power

The recording of the power used in mixing proved to be an accurate and simple method. The graphs proved that once the initial mixing has taken place, the load is constant and the pressure fluctuations appear small. From this data it will be possible to reassess the need for two

ROTOR	POLYURETHANE AND 6 X BARS								POLYURETHANE NO BARS				LINATEX		LINATEX						
STATOR	WITH BAR								CLEAN				CLEAN		BAR						
TYPE OF SEAL	AIR								AIR				AIR		AIR						
MIX	3	3	3	3	A	1	1	1	A	3	1	1	3	A	A	3	3	3	1	1	3
SLUMP mm	25	55	125	-	-	5	20	85	-	120	0	30	100	-	-	80	25	30	70	180	85
REF / SPEED rpm	1	2	3	4	5	6	7	8	9	10	11	12	13	14	15	16	17	18	19	20	21
0	0	0	0	-	0	0	0	0	0	0	0	0	0	0	0	0	0	0	0	0	0
50	0.20	0.08	-	-	0.19	0.12	0.32	0.10	0.13	-	0.33	0.37	-	-	-	0.16	0.31	-	-	0	-
100	0.69	0.42	0.26	-	0.60	0.55	0.75	0.40	0.60	0.04	0.69	1.05	0.86	0.31	0.21	0.48	0.86	0.72	0.29	0.03	0.29
150	1.51	1.10	0.79	-	1.33	1.72	1.42	0.91	1.73	0.37	2.24	1.95	2.01	1.31	1.18	1.10	1.63	1.45	1.04	0.57	0.78
175	1.95	1.48	1.09	1.95	2.22	2.31	1.73	1.19	2.13	0.66	2.80	2.42	2.57	1.65	1.57	1.43	2.10	1.79	1.39	0.84	1.13
200	2.36	1.90	1.34	-	2.40	3.54	2.01	1.43	2.73	0.93	3.41	2.82	3.18	2.23	2.13	1.75	2.63	2.01	1.67	1.04	1.46
250	3.37	2.89	1.94	-	4.48	4.94	2.78	1.88	3.57	1.84	4.60	3.79	4.23	2.88	3.04	-	-	2.78	2.56	1.74	2.08
300	4.76	3.77	2.74	-	6.99	6.43	3.95	2.66	4.60	3.44	6.13	4.74	5.58	4.06	4.39	-	-	4.04	3.27	3.11	3.01
350	6.39	4.38	3.79	-	-	8.36	5.33	3.58	5.96	5.09	7.98	5.89	7.53	4.86	5.22	-	-	5.20	4.83	4.35	3.64
	1	2	3	4	5	6	7	8	9	10	11	12	13	14	15	16	17	18	19	20	21

NOTE:- all powers are given in kilowatts

Table 15

two transducers, and may be possible to use only one transducer manually operated with a hydraulic switching arrangement.

Capacity

The tests in Phase 2 were all carried out with a mix volume of 0.028 m^3 and no attempt has been made to increase the capacity. It has been noted that for the drier mixes the limiting factor in the capacity of themachine appears to be the overhang of the 0.127 radius on the stator casting. This restricts the free movement of the upper layers of material and may be increasing the power requirements even with the more fluid mixes.

Disc Speed

The new material covering the disc is more difficult to keep clean due mainly to its rougher texture, but the original disc speed of 175 rpm gave good mixing performance and an increase in disc speed did not give a greatly increased cleaning effect.

Air Seal

The air seal was effective throughout the range of mixing tests. In the case of the more fluid mixes the air supply had to be reduced as the mix was being blown out of the bowl. This effect was also noted with the mixing of dry aggregates alone.

Splitter Bar

The splitter bar fitted to the stator was still necessary as demonstrated by the mixing test carried out with the bar removed. The mix did not toroid as in the previous mixes and just rotated around the bowl with little or no speed in the small r direction of the mix. When the bar was refitted the mix returned to its normal action.

8.9 MATHEMATICAL MODEL

8.9.1 Construction of ω_R Against Slump Curve

Using the data from Phase 1 and Phase 2 a plot of ω_R against slump was plotted (Plot 8.7).

The curve is of the form

$$y = 4.22 \sqrt[5]{x}$$

8.9.2 Values of n

Considering additional cine film of the mixing action, the following values have been observed.

when ω_R = 8 rad/s (1.27 rev/s)

$$n = 2 \text{ rev/s}$$

$$n = \sqrt[3]{\omega_R}$$

A curve has been plotted of this law and is shown in Plot 8.8.

NOTE

The values obtained from the graph have been approximately checked against the cine film values of n for other mix speeds and do agree, the main difficulty being the determining of n at the higher speeds.

8.9.3 Power Model

The formula derived in Phase 1 is shown in equation (7).

$$\text{Input Power} = W\,\mu_S\left[\omega_R^3 R_R^2 + 39.5.n^3.r^2(\gamma+\Omega)\right] + W.g.h.n$$

but in the case of the prototype machine, the known values may be substituted

$$\text{Input Power} = 91\,\mu_S\left[\omega_R^3 0.34^2 + 39.5n^3 0.127^2 \times 2.0\right] + 91 \times 9.81 \times 0.34 \times n$$

$$= \mu_S\,(10.58\,\omega_R^3 + 11.6n^3) + 304n$$

Using the data from 8.9.1 and 8.9.2 the only unknown is μ_S.

$$\therefore\ \mu_S = \frac{\text{Input Power} - 304n}{10.58\omega_R^3 + 11.6n^3} \qquad (8)$$

8.9.4 Method of Determining μ_S

The greatest amount of data is known at a disc speed of 175 rpm from Plot 8.7 the value $\bar{w}_R$ may be obtained, or by using the formula

$$\bar{w}_R = 4.22 \sqrt[5]{\text{slump}}$$

where slump is in mm

The value n is obtained from the expression

$$n = \sqrt[3]{\bar{w}_R}$$

The values of power used at each disc speed may be read from the power curves Plots 8.9 to 8.15. By using the above data, Table 17 was constructed and values of μ_S calculated.

The ratio $R_{M/D}$ was also calculated, this is the ratio between mix speed and disc speed and was calculated for each value of slump. This ratio is assumed to be constant for all disc speeds thus enabling the value of $\bar{w}_R$ to be found for each disc speed considered. These values were then checked against the cine film and a reasonable agreement was found. The above calculations were repeated for the speeds 150, 175, 200, 300 and 350 rpm and these are detailed in Tables 16 to 21.

The values of μ_S are plotted in the Plot 8.16, this gives the value of disc speed plotted against μ_S. The plots for each value of slump are shown in Plot 8.16.

8.10 PREDICTION OF SIZES AND POWER REQUIREMENTS OF LARGE SIZE MIXING MACHINES

By the use of the data derived and the volume and power models the size and power requirements of large machines may be calculated. At this stage of development the calculations were carried out but are not included in this report.

SPEED 150 rev/min $\bar{w}_D$ = 15.71 rad/s				
SLUMP	kW	$\bar{w}_R$	n	μ_S
10	1.87	5.81	1.80	0.469
20	1.60	6.60	1.88	0.265
40	1.27	7.54	1.96	0.122
60	1.08	8.17	2.01	0.069
80	0.93	8.64	2.05	0.039
100	0.86	9.11	2.09	0.024
120	0.78	9.43	2.11	0.014
140	0.71	9.74	2.14	0.005
160	0.63	10.05	2.16	-
180	0.56	10.21	2.17	-

Table 16

SPEED 175 rev/min $\bar{w}_D$ = 18.33 rad/s				
kW	$\bar{w}_R$	n	μ_S	$R_{M/D}$
2.44	6.69	1.88	0.464	0.37
2.20	7.68	1.97	0.276	0.42
1.81	8.83	2.07	0.138	0.48
1.54	9.57	2.12	0.085	0.52
1.36	10.14	2.16	0.056	0.55
1.25	10.60	2.20	0.041	0.58
1.16	10.99	2.22	0.031	0.60
1.10	11.34	2.25	0.025	0.62
1.08	11.64	2.27	0.021	0.64
1.04	11.92	2.28	0.018	0.65

Table 17

SPEED 200 rev/min $\bar{w}_D$ = 20.94 rad/s				
SLUMP	kW	$\bar{w}_R$	n	μ_S
10	3.17	7.75	1.97	0.432
20	2.69	8.79	2.06	0.245
40	2.01	10.05	2.16	0.111
60	1.79	10.89	2.22	0.073
80	1.60	11.52	2.26	0.051
100	1.42	12.15	2.30	0.034
120	1.30	12.56	2.32	0.026
140	1.16	12.98	2.35	0.018
160	1.07	13.40	2.38	0.013
180	1.07	13.61	2.39	0.012

Table 18

SPEED 250 rev/min $\bar{w}_D$ = 28.18 rad/s				
kW	$\bar{w}_R$	n	μ_S	
4.48	9.96	2.13	0.323	
3.92	11.00	2.22	0.206	
3.17	12.57	2.33	0.107	
2.57	13.61	2.39	0.064	
2.16	14.40	2.43	0.042	
1.94	15.18	2.48	0.030	
1.84	15.71	2.50	0.025	
1.79	16.23	2.53	0.021	
1.75	16.76	2.56	0.018	
1.74	17.02	2.57	0.017	

Table 19

SPEED 300 rev/min $\bar{w}_D$ = 31.42 rad/s				
SLUMP	kW	$\bar{w}_R$	n	μ_S
10	5.82	11.62	2.27	0.279
20	5.07	13.19	2.36	0.165
40	3.95	15.08	2.47	0.082
60	3.43	16.34	2.54	0.054
80	2.98	17.28	2.59	0.038
100	2.83	18.22	2.63	0.030
120	2.80	18.85	2.66	0.027
140	2.76	19.48	2.69	0.024
160	2.72	20.11	2.72	0.021
180	2.69	20.42	2.73	0.020

Table 20

SPEED 350 rev/min $\bar{w}_D$ = 36.42 rad/s				
kW	$\bar{w}_R$	n	μ_S	
7.46	13.48	2.38	0.239	
6.34	15.30	2.48	0.137	
5.15	17.48	2.60	0.073	
4.48	18.94	2.67	0.048	
4.09	20.03	2.72	0.036	
3.88	21.12	2.76	0.029	
3.80	21.85	2.80	0.026	
3.73	22.58	2.82	0.023	
3.73	23.31	2.86	0.020	
3.73	23.67	2.87	0.019	

Table 21

8.11 SUMMARY OF WORK TO DATE

The results of the work to date have been satisfactory, but it was noted that the overhang on the top of the stator was restricting the machine capacity.

If this restriction was removed, it was thought the capacity could be increased, and hence the power used.

The air seal appeared to be too effective so a reduction in the flow and pressure may be possible.

Finally, the discharge to date has been by hand, but the machine is capable of powered discharge.

8.12 PHASE 3

The third phase of testing was carried out to increase the known parameters of the machine. The specific areas are listed below.

Capacity

To find if the capacity of the prototype Rotary mixing machine can be increased by the cutting back of the stator overhang, Drg. 75W0007, and if so, what is the cutback consistent with the maximum capacity and efficient mixing.

Power

a) To find the change in power requirements if the capacity can be increased.

b) To check the power figures against those computed from the mathematical model.

Air Seal

To find the minimum pressure and flow rates which will give the minimum sealing qualities to the mixing machine.

Discharge of Mix

To find if the mix can be successfully discharged with the present or modified stator design.

8.13 METHODS

A short description of the methods used in each of the test areas, the main test procedures were as used in previous phases.

8.13.1 Capacity

The overhand of the stator was reduced by small amounts and the mixing action checked after each reduction, the reductions were stopped at the first signs of a reduction in mixing efficiency.

8.13.2 Power

The power required was again measured with the aid of a transducer and chart recorder. The method used was similar to that detailed in Phase 2 but the method suggested in the conclusions to Phase 2 was used. That is, the number of transducers used was reduced to one and a manual switching system employed to change the circuit reading. (Plate 8.1). The chart recorder used was of the servo pen type, as the original U.V. recorder was not available. (Plate 8.2). Again, the calibration of the equipment was carried out using a dead weight testing machine. This method of recording proved to be equal to that previously used.

8.13.3 Pressure Gauge Calibration

The pressure gauges used on the test rig were calibrated using the dead weight testing machine. (Plate 8.3).

8.13.4 Air Seal

The necessary air pressure to retain the mixture above the air seal. The initial tests were carried out with more than adequate air pressure,

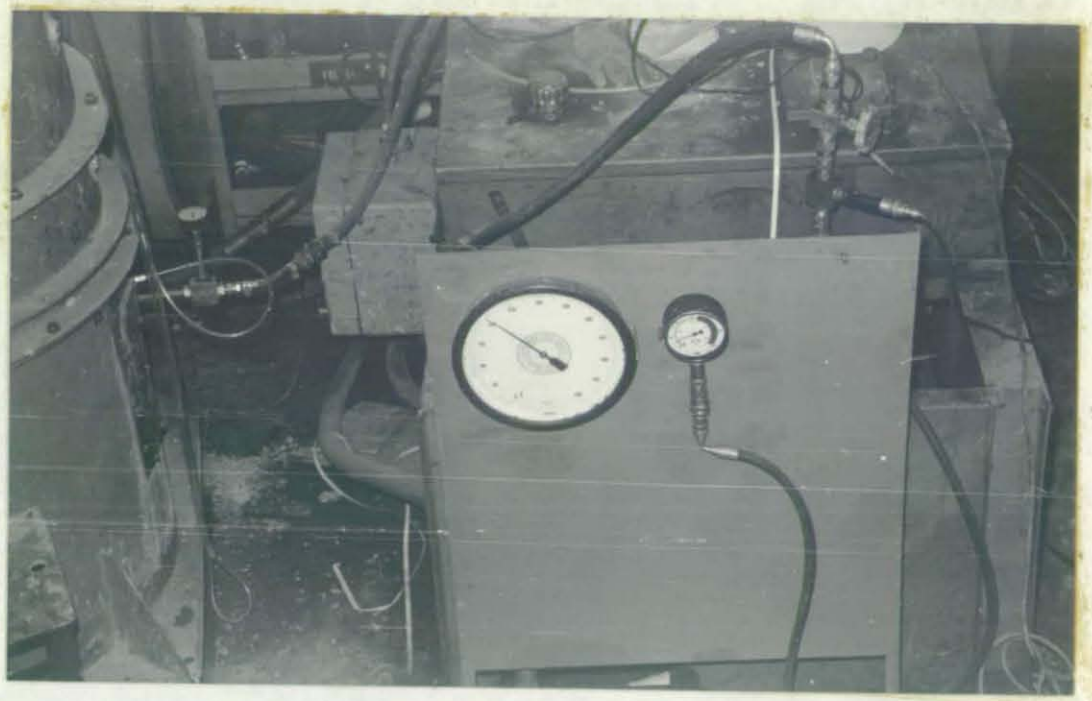

Plate 8.1

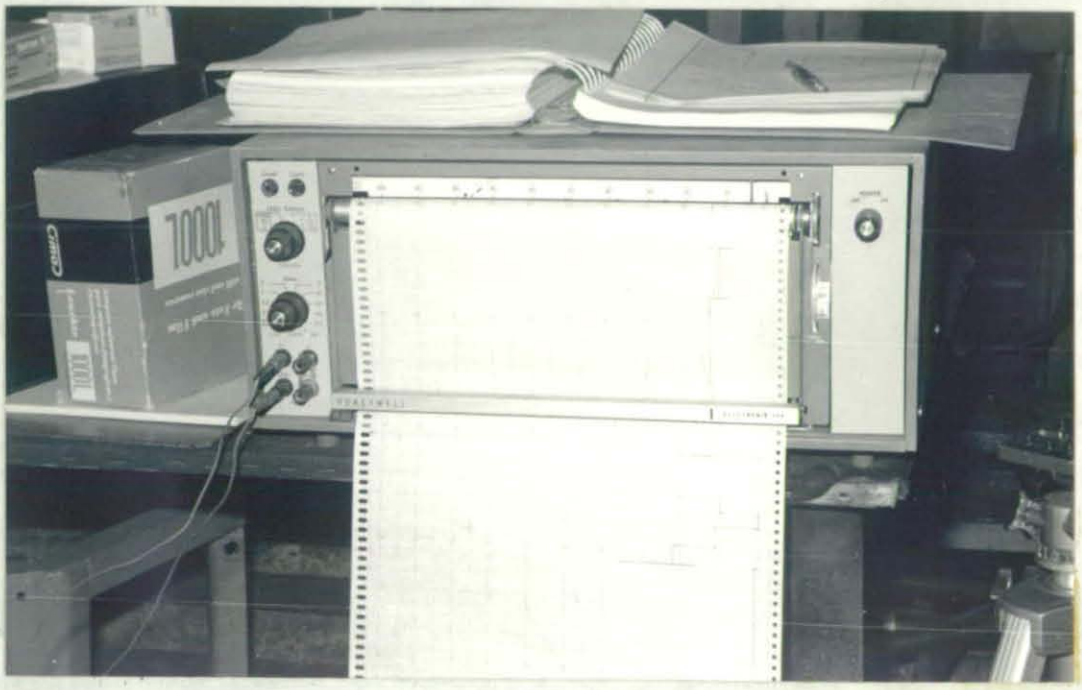

Plate 8.2

Plate 8.3

Plate 8.4

but this was reduced to give a more reasonable pressure during the course of the testing, pressure measurement using simple manometer. (Plate 8.4). This reduction became more necessary as the overhang was reduced and the fluid mixture was blown out of the top of the bowl, the pressure was finally reduced to approximately 35 kN/m^2 input.

8.13.5 Discharge of Mix

The initial test of the discharge was to mix 91 kg of concrete, position a small dumper at the door position and open the door. The gap between the dumper and mixer was bridged by a steel plate, this proved necessary to catch the last part of the mix. The same method was used for increased mix weights.

8.14 RESULTS FROM PHASE 3

The results from all the Phase 3 testing are summarized below.

8.14.1 Capacity

The relief of the stator overhang had the effect of increasing the capacity of the machine from 91 kg to 136 kg, at 136 kg the mixing action was good. In fact, the same as that noted for 91 kg (Plate 8.5), prior to the modification. The amount of relief was to increase the diameter of the upper part of the stator to a maximum, this was achieved in steps. After a diameter of 0.71 was reached, no further increase in capacity was possible, and the mixing action appeared to be slightly less stable.

The machine was in fact used to mix 181 kg of concrete, but the action was impaired by the mix at the top of the toroid overlapping, this prevented the true mixing action taking place. After the discharge the confirmation of the lack of mixing was found on the splitter bar where some of the dry mix remained. When the dry mix was in the bowl it completely filled the mixing area, there was no hole down the middle and

Plate 8.5

this centre portion did not mix. The discharge of the 181 kg was complete in approximately two seconds. In order to obtain a range of powers for the mixer, a load of 45 kg was mixed, but the action did not fully develop and did not give a reliable result.

8.14.2 Power Consumption

Details of the power consumed in the mixing process are summarized in Table 22. The results are also plotted in Graphs 8.17, 8.18 and 8.19 which shows the power consumed in mixing at 175 rpm disc speed against various values of slump.

8.14.3 Pressure Gauge Calibration

The pressure gauges used on the test rig were calibrated using the dead weight testing machine. (see Plot 8.20). The gauge used to measure boost pressure was reading 34.5 kN/m^2 high and the gauge used to measure main pressure was reading approximately 345 kN/m^2 high.

8.14.4 Air Seal

The original tests were carried out with a higher air pressure than necessary. As the overhang was reduced the excess air pressure blew the mix out of the top of the machine, this was due to the cutback exposing the air seal, Fig. 53. The air pressure was reduced to 35 kN/m^2 at the entry to a 0.012 m Ø tube using standard discharge tables the flow rate is approximatly 1.5 m^3/min and the pressure in the lower chamber was 0.5 m water gauge. (When mixing). At this value there was no leaks past the seal and when the mixer was stationary the pressure dropped to 0.23 m.

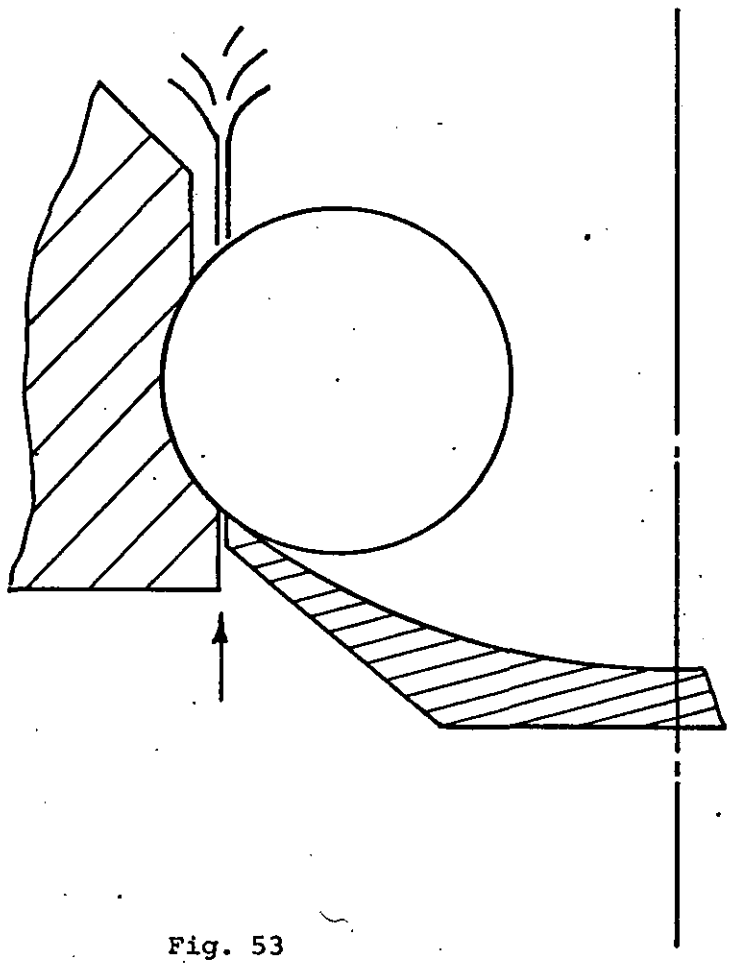

Fig. 53

8.14.5 Discharge of Mix

The discharge of this machine with the modified rotor/stator configuration had not been tested due to an incorrect positioning of the discharge door on the original modification. The door position was changed to be level with the top of the rotor. The discharge was originally tried with

a 91 kg load of Mix 3 at a slump of 100 mm. The result was a complete discharge of the mix into the dumper. The time taken to empty 95% was less than two seconds. (Plate 8.6). The discharge was checked at various values of slump and performed satisfactorily in all cases. The mix was increased to 136 kg and again the discharge was 95% complete within two seconds. The mix size was again increased to 181 kg and again the mix was 95% complete in under two seconds.

No detailed analysis of the discharged concrete was possible, but it did not appear to have segregated to any great degree, this was judged by eye in the dumper skip. The guards were removed from the discharge door and the mix was deposited in the skip with no losses or splashing. (Plate 9.7).

Plate 8.6

Plate 8.7

8.15 ANALYSIS OF RESULTS FROM PHASE 3

The major results of Phase 3 tests are shown in summary form in Table 22. The tests have only been carried out at a disc speed of 175 rpm. The results in Table 22 have been plotted in the form power used in mixing against slump. These graphs are shown in Plots 8.17, 8.18 and 8.19. The three plots representing the various mix weights 91 kg, 136 kg and 181 kg respectively.

As may be seen from these curves, the points give a reasonable correlation for the mix weights of 91 kg and 136 kg, but do not give such good agreement for the 181 kg mix weight. This may be partly explained by the previously mentioned difficulty in completely mixing the 181 kg mass, this was particularly true of the low slump mix, the higher slump mixes due to the higher fluidity tended to mould to the machine, hence giving

AMOUNT MIXED kg	SLUMP mm	MIX	POWER kW	REF
45	130	3	1.64	1
91	130	3	1.52	2
136	188	3	1.54	3
181	70	3	2.52	4
181	130	3	2.00	5
136	40	3	2.72	6
91	60	3	3.51	8
181	30	3	4.37	9
181	30	3	4.16	10
181	70	3	3.53	11
136	30	3	3.48	12
136	90	3	2.21	13
136	130	3	1.57	14
91	0	3	2.28	20
91	40	3	1.85	21
91	90	3	1.35	22
91	150	3	1.06	23
91	130	3	1.07	24
136	0	3	4.03	25
136	30	3	2.62	26
136	60	3	2.02	27
136	140	3	1.54	28
136	155	3	1.48	29
181	0	3	5.65	30
181	27	3	3.48	32
181	50	3	2.34	33
181	100	3	1.93	34
91	35	2	1.77	40
91	140	1	1.27	41
136	10	1	2.97	51
136	35	1	2.43	52
136	60	1	2.00	53
136	35	1	1.66	54
136	150	1	1.59	55

Table 22

a more satisfactory mix. The mixes References 9, 10 and 11 have not been included in the curve due to the failure of the air seal, this was due to the machine leaking badly from the reassembled stator. This leakage was not noted until after the mixing run. The mix Reference 30 was also not used, partly for the non-mixing reasons stated above, but also the problem in defining a no slump mix, this may indicate a very dry mix and gives in effect little indication of the mix properties, the combination of these conditions suggest that the figure at Reference 30 would be erroneous.

8.16 MATHEMATICAL MODEL

In considering the above power curves the mathematical model for power derived in Phase 2, should if correct, give the values noted on these curves. For this to be true the new parameters will have to be calculated for the new stator shape and new mix weight.

8.16.1 Derivation of Stage Two mixing model

The stage two mathematical model is based on the original model as per equation (7).

$$\text{Input power} = W.\mu_s.\left[w_R^3 R_R^2 + 39.5.n^3.r^2(\Omega + \gamma)\right] + W.g.h.n.$$

The variables which will change for stage two are:-

W = weight of mix

R_R = effective radius

Ω = upper Stator angle

Considering angle Ω

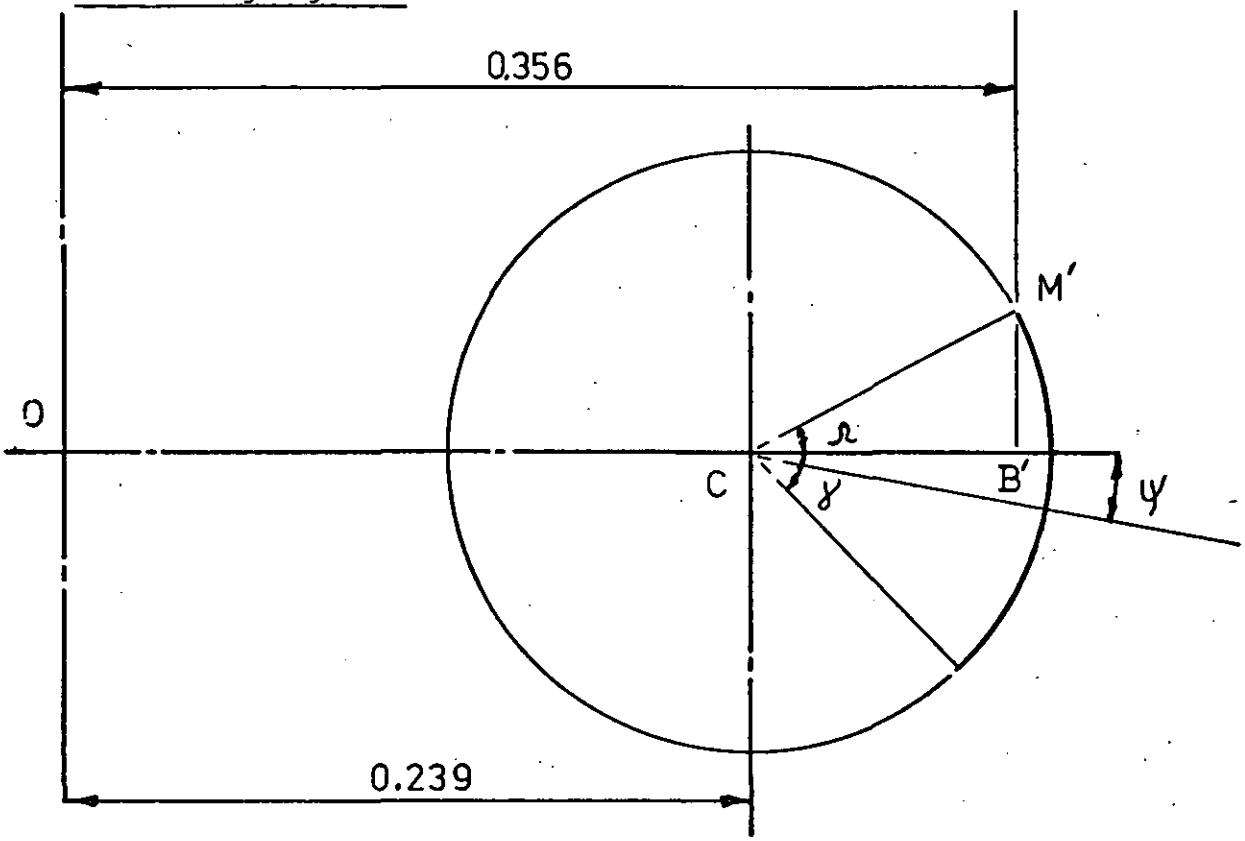

Fig. 54

In Δ CB'M'

$$B'C = 0.356 - 0.239$$

$$= 0.117$$

$$M'C = 0.127$$

$$\therefore \cos \Omega = \frac{0.117}{0.127}$$

$$\Omega = 23.4^{\circ} \ (0.41 \text{ rad})$$

Considering R_R

From equation 2

$$R_R = \left[\cos\psi \left[\frac{r.\sin\left(\frac{\Omega+\gamma}{2}\right)}{\frac{\Omega+\gamma}{2}}\right]\right] + \frac{D}{2} \quad m$$

$$\psi = \gamma - \frac{(\ell+\gamma)}{2}$$

$$\psi = 44.1 - \frac{23.4 + 44.1}{2}$$

$$\therefore R_R = \left[\text{Cos } 10.35 \left[\frac{0.127 \,.\, \text{Sin } (33.75)}{0.59}\right]\right] + \frac{0.479}{2}$$

$$R_R = 0.357 \text{ m}$$

$\therefore$ Stage two formula for W = 91 kg is:-

$$\text{Input power} = 91.\mu_s.\left[w_R^{\,3}.0.357^2 + 39.5.n^3.0.127^2\ (1.18)\right] + 91.9.81.0.34\ n \quad (9)$$

$$\text{Input power} = 91\mu_s\left[w_R^{\,3}\ 0.127 + 0.75\ n^3\right] + 303.5\ n \quad (10)$$

8.16.2 Power Used for 91 kg Mix Modified Stator

Now consider the values from the tests at 91 kg by putting the values of w_R, n and μ_S from Table 20 into the above formula a power consumption for 91 kg of mix with the cutback stator may be found, and are shown in Table 23.

SLUMP	w_R	n	μ_S	Power kW
10	6.69	1.88	0.464	2.39
20	7.68	1.97	0.276	2.19
40	8.83	2.07	0.138	1.81
60	9.57	2.12	0.085	1.56
80	10.14	2.16	0.056	1.37
100	10.60	2.20	0.041	1.26
120	10.99	2.22	0.031	1.17
140	11.34	2.25	0.025	1.12
160	11.64	2.27	0.021	1.09
180	11.92	2.28	0.018	1.06

Table 23

The values from Table 23 are shown on Plot 8.17.

8.16.3 Volume Model 136 kg

If the mix mass is increased to 136 kg (0.058 m^3) then the original volume model for the machine no longer holds true. From the tests it would appear that by removing some of the stator overhang, the mix is allowed to form a better shape and hence mix more material. This suggests that by changing the angle θ in the original formula a new stage two model may be found.

The original model was of the form of equation 1 .

$$V = 2\pi (r^2\theta) \left[\left[\frac{2}{3} . r . \frac{\sin \theta}{\theta} \right] + \frac{D}{2} \right] m^3$$

The volume can be varied by the change of angle θ, that is, if the other variables are kept constant. The values of volume calculated by the change in angle are plotted in Plot 8.21, the angle which gives the volume 0.058 m^3 equivalent to the weight of 136 kg is 230° that gives θ of 115 ≡ 2.016 rad.

Check in equation (1).

$$V = 2\pi r^2 \theta \left[\left[\frac{2}{3} . r . \frac{\sin \theta}{\theta} \right] + \frac{D}{2} \right] m^3$$

$$V = 2.\pi . 0.127^2 . 2.016 \left[\left[\frac{2.0.127.\sin 115.5}{3 \quad 2.016} \right] + \frac{0.478}{2} \right]$$

$$\underline{V = 0.057 \ m^3}$$

Taking concrete at density of 2350 kg/m^3

$$W = 0.057 \times 2350 \ kg$$

$$\underline{W = 135 \ kg}$$

General Note

The maximum capacity of the machine has been found to be approximately 181 kg. If this model holds true, the maximum capacity should correspond to the volume given by the above formula, but using an angle θ of 180° (360° total).

$\theta = 180^{\circ} = 3.142$ rad

$$V = 2\pi . 0.127^2 . 3.142 \left[\left[\frac{2}{3} . 0.127 . \frac{\sin 180}{3.142} \right] + \frac{0.478}{2} \right] m^3$$

$V = 0.077\ m^3$

$\therefore\ W = 0.077 \times 2350$ kg

$W = 181$ kg (Q.E.D.)

8.16.4 Derivation of Stage Two power model for 136 kg and 181 kg

The only difference between these models and that used for the 91 kg batch equation (10) will be the mass of the mix, hence by substituting 136 kg into equation (9) the model will be valid for 136 kg.

$$\therefore \text{Input power} = 136\ \mu_S \left[w_R^3\ 0.357^2 + 39.5\ n^3\ 0.127^2\ (1.18) \right] + 136 \times 9.81 . 0.34 . n.$$

$$\therefore \text{Input power} = 136\ \mu_S \left[w_R^3\ 0.127 + 0.75\ n^3 \right] + 453.6\ n \text{ ------- } (11)$$

This gives a stage two formula for 136 kg.

Now to substitute 181 kg into equation (9).

$$\text{Input power} = 181\ \mu_S \left[w_R^3 . 0.357^2 + 39.5\ n^3\ 0.127^2\ (1.81) \right] + 181 \times 9.81 \times 0.34 \times n$$

$$\therefore \text{Input power} = 181\ \mu_S . \left[w_R^3 \times 0.127 + 0.75\ n^3 \right] + 603\ n \text{ ------ } (12)$$

8.16.5 Power Plot Using Stage Two Formula

The formula derived in 8.16.4 may be applied to the known data and values calculated for power used at various values of slump. The basic values of w_R, n and μ_S are those from Table 24. The values of power are shown in Table 24.

				136 kg	181 kg
SLUMP	τ_R	N	μ_S	Power kW	Power kW
10	6.69	1.88	.464	3.56	4.50
20	7.68	1.97	.276	3.27	4.21
40	8.83	2.07	.138	3.70	3.51
60	9.57	2.12	.085	2.33	3.00
80	10.14	2.16	.056	2.05	2.68
100	10.60	2.20	.041	1.89	2.48
120	10.99	2.22	.031	1.75	2.31
140	11.34	2.25	.025	1.68	2.21
160	11.64	2.27	.021	1.63	2.15
180	11.92	2.28	.018	1.58	2.09

Table 24

These values have been plotted on Graphs 8.18 and 8.19.

8.17 EFFECT OF INCREASED CAPACITY ON LARGE MIXER DIMENSIONS

Using the Phase 2 and 3 volume model it is now possible to calculate the size of mixer necessary for larger batch sizes.

The model used for the Phase 2 volume was reduced to a formula for D_T (stator total diameter)

$$D_T = D + 2r$$

and $$D = \frac{V - 0.0081}{0.062}$$

The model used for the Phase 3 volume was reduced to a formula for D_T.

$$D_T = D + 2r$$

and $$D = \frac{V - 0.0079}{0.104}$$

8.18 EFFECT OF "r" ON THE CAPACITY OF THE MIXER

The only remaining parameter which has not been investigated is the radius of the stator (r). The mathematical model of volume takes into account the radius hence by changing the value of r in this formula the new possible capacities may be calculated.

The Phase 3 volume model from equation 1 .

$$V = 2\pi(r^2\theta)\left[\left[\frac{2r}{3}\,\frac{\sin\theta}{\theta}\right] + \frac{D}{2}\right]$$

Now by putting "r" = 0.152 and using the same angle values for Phase 2 ie

$$\theta = 115^\circ \equiv 2.016 \text{ rad}$$

$$V = 2\pi.\ 0.152^2 \times 2.016\left[\left[\frac{2}{3} \times 0.152 \times \frac{\sin 115.5^\circ}{2.016}\right] + \frac{D}{2}\right] m^3$$

$$V = 0.292\left[0.045 + \frac{D}{2}\right]$$

$$V = 0.013 + 0.146\ D$$

N.B. D = stator max - 2r

$D_R = D = 2r$

$$\therefore\ D = \frac{V - 0.013}{0.146}$$

Now consider r = 0.178

$$V = 2\pi.0.178 \times 2.016\left[\left[\frac{2}{3} \times 0.178.\frac{\sin 115.5^\circ}{2.016}\right] + \frac{D}{2}\right]$$

$$V = 0.401\left[0.053 + \frac{D}{2}\right]$$

$$V = 0.021 + 0.201\ D$$

$$\therefore\ D = \frac{V - 0.021}{0.201}$$

$$D_T = D + 2r$$

By putting values of V into each of the volume models the respective values of D_T can be calculated. These values are shown graphically in Plot 8.22. The values up to 1 m^3 are considered to be valid as the only variable other than the radius "r" is the machine diameter D_T, and this will have little effect on the mixing geometry.

8.19 SUMMARY OF WORK TO DATE

The work in Phase 3 may be summarized under the following headings:

8.19.1 Capacity

The successful mixing capacity has been increased to 136 kg by relief of the stator overhang, this relief also allowed the machines theoretical maximum capacity 181 kg to be mixed but this was not a total success. A value was also placed upon the minimum amount which may be mixed, this was 45 kg.

8.19.2 Air Seal

The pressure and volume of air used in the seal was reduced to 35 kN/m^2 with a volume of approximately 1.5 m^3/min.

8.19.3 Mix Discharge

The power discharge was found to work well and the increase in capacity did not affect its operation, the time to discharge was approximately two seconds.

8.19.4 Volume Model

The volume model for the machine was modified to the 136 kg capacity as obtained in the tests. During the course of this modification, the total practical capacity was calculated to be 181 kg and this proved to confirm that found by the experiments.

By applying the new volume model to increased stator radii a plot of the effects of dimension changes was compiled (Plot 8.22). This indicated that if the stator radius could be increased the diameter of 0.14 m^3 mixer would be reduced from 2.4 for a Phase 2 mixer to 1.55 for a Phase 3 mixer and for a 0.152 stator radius to 1.18 m diameter.

In each case the reductions are significant and would indicate an additional phase of testing using a 0.152 stator.

The maximum practical for this machine would be a 0.178 stator radius i.e. 4 x $r_7$0.712 but this is thought to be likely to give mixing problems, so a 0.152 radius would give an indication of the feasibility of a 0.178 radius.

8.19.5 Power Model

The power models for 91 kg and 136 kg using the reduced stator have been checked against the test results and would appear to give a good agreement. The next phase will test the models accuracy when the stator radius is changed to 0.152.

8.20 PHASE 4

The fourth phase of the testing was carried out to find if the capacity of the prototype mixing machine could be yet again increased by using a 0.152 stator radius and to correlate this to the power requirements both measured and predicted by the mathematical model.

8.21 METHOD

A short description of the methods used are given below, the main test procedures are again, as in previous phases.

Capacity

Originally it was intended that the stator casting should be re-machined as per the above drawing (76W0010), but due to a mistake in the machining operation too much material was removed from the casting. In order to correct this condition, the stator radius was re-filled and then formed to shape using a strickle and power buff.

Power Consumption

The power consumption was measured using the pressure gauges on the test rig. These gauges were calibrated using the dead weight machine. All

figures stated on the report sheets have been corrected for the errors found in these gauges.

8.22 RESULTS FROM PHASE 4

The results from Phase 4 testing are summarized below:-

8.22.1 Capacity

The initial prediction of the capacity of the machine with a 0.152 stator was from the formula

$V = 0.013 + .146\ D$ where D is in metres

$V = 0.013 + 0.146 \times 0.427$ $D = 0.738 - 0.305$

$V = 0.0763\ m^3$ $D = 0.427$

$W = 0.076 \times 2350$

$W = 179$ kg

∴ the maximum capacity expected for this machine with a 0.157 rad stator is 179 kg. On the first tests the mixer was charged with 185 kg of mix, the action was evident but the top of the toroid was not forming a clean shape. It was over laying the previously rotated mix and hence slowing and sometimes stopping the action. Concrete was removed from the machine until a good clean toroid was formed and the amount removed, weighed, this amount was 12.7 kg. This gives a stable mix weight of 185 - 13 = 172 kg and all remaining tests were carried out based on this figure. This figure is below that calculated but due to the rectification of the stator shape there was no real guarantee of the 0.152 profile, and this may have caused the reduction from the calculated value. This may also have affected the mixing action as the surface finish on the filler was not good, in addition after the first mixing test the lower edge of the filler had started to wear away and this problem increased as the trials progressed. Thus causing a non-continuous boundary layer to form at the seal interface. (Plate 8.8 and 8.9).

Plate 8.8

Plate 8.9

8.22.2 Power

Details of the power required are given in Table 25 and plotted in Plot 8.23.

REF	MIX	SLUMP (mm)	Power kW Measured
1	3	15	4.93
2	3	30	4.00
3	-	-	2.31
4	3	60	3.00
5	3	140	2.21
6	3	185	1.95
7	3	85	2.47
8	3	50	3.48

Table 25

8.22.3 Discharge

The discharge was tried again and the performance was again acceptable, the only difference from Phase 3 was a slight increase in retention of the mix on the stator walls. This was due to the increase in surface roughness due to the repaired stator.

8.23 ANALYSIS OF RESULTS FROM PHASE 4

Due to the reduced maximum mixing capacity a new volume model was constructed. This model not only gave the model to allow prediction of the large mixer dimensions, but also provides the basic data for the calculation of the Effective Radius R_R used in the power model.

In viewing the results in retrospect, it would appear that the power values for the mixes were basically taken at two weights. These were an average of 179 kg for two results and an average of 172 kg for the remainder. The values taken at 179 kg were already suspect due to the effects of non

mixing already noted in the text. With this in mind, the curves for both weights will be constructed and the values checked.

8.24 VOLUME MODEL

The volume model in Phase 3 will be suitable for the results at 179 kg but a new model must be constructed for 172 kg.

The volume of 172 kg

$$V = \frac{170}{2350} = 0.723 \text{ m}^3$$

The model is of the form

$$V = 2\pi(r^2\theta)\left[\left[\frac{2}{3} r \frac{\sin\theta}{\theta}\right] + \frac{D}{2}\right] \text{m}^3$$

by substitution the angle θ which gives a volume of 0.723 m^3 is 160° (1.85 rad).

8.25 POWER MODEL

The stage 3 power model may be used for this phase, but the values of W, Ω, γ and R_R must be modified to allow for the new stator shape.

Consider h

From Fig. 55 the new value of h may be calculated:

$$CE = 0.33 - 0.214$$
$$= 0.116$$
$$\therefore EH = \sqrt{0.152^2 - 0.116^2}$$
$$= 0.098$$
$$KB = 0.33 - 0.116 - 0.152$$
$$= 0.062$$
$$\therefore OK = \sqrt{0.46^2 - 0.062^2}$$
$$= 0.456$$
$$\therefore KL = 0.456 - 0.32$$
$$= 0.136$$
$$\therefore h = 0.136 + 0.098 + 0.152$$
$$\doteq 0.386$$

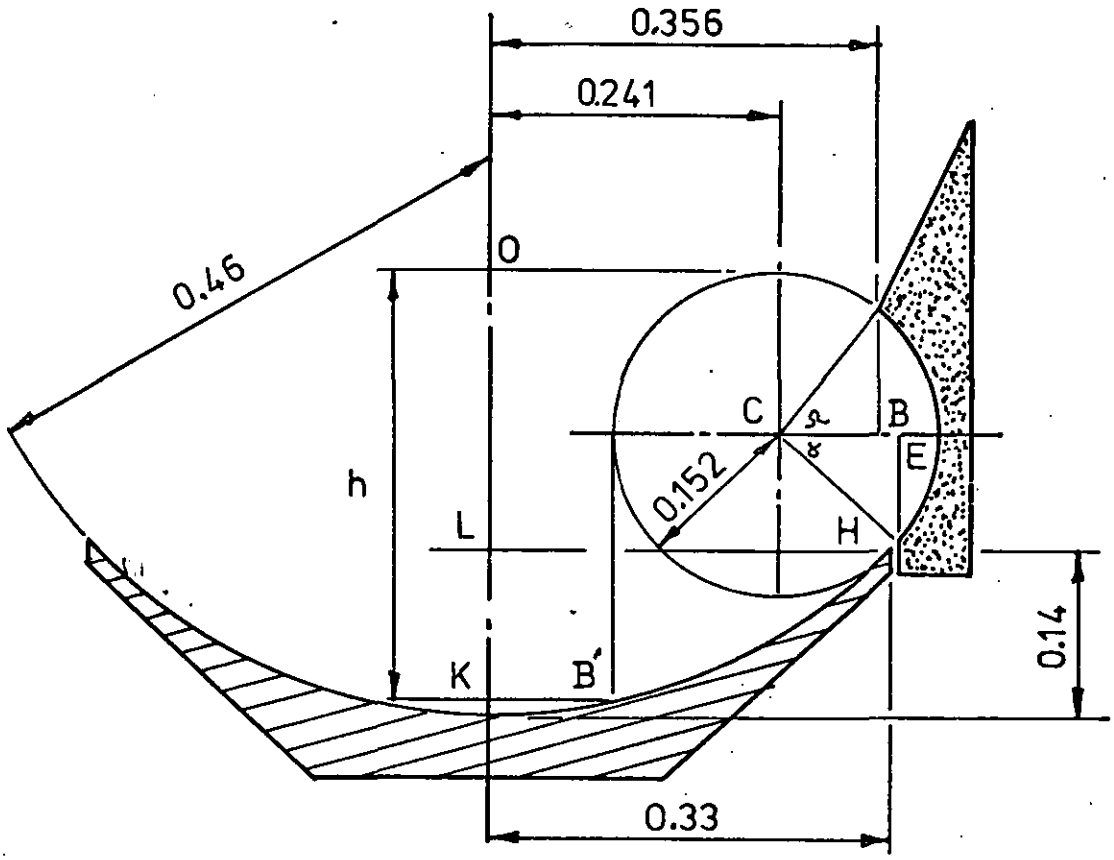

Fig. 55

Consider angle Ω

$$CB = 0.356 - 0.214$$

$$= 0.142$$

$$CM = 0.152$$

$$\therefore \cos\Omega = \frac{CB}{CM} = \frac{0.142}{0.152} = 0.934$$

$$\underline{\Omega = 20.9^\circ \quad (0.365 \text{ rad})}$$

Consider angle γ

$$EH = 0.098$$

$$CH = 0.152$$

$$\therefore \sin\gamma = \frac{EH}{CH} = \frac{0.098}{0.152} = 0.645$$

$$\underline{\gamma = 40.2^\circ \quad (0.70 \text{rad})}$$

Now consider R_R, from equation (2).

$$R_R = \cos\psi \left[\frac{r.\ \sin\left(\frac{\Omega+\gamma}{2}\right)}{\frac{\Omega+\gamma}{2}} \right] + \frac{D}{2} \quad m$$

$$\psi = \gamma - \left[\frac{\Omega+\gamma}{2}\right]$$

$$\therefore \quad \psi = 40.2 - \left[\frac{20.9 + 40.2}{2}\right]$$

$$\psi = 9.65^{\circ}$$

$$\therefore \quad R_R = \cos 9.65 \left[\frac{0.152\ .\ \sin\left(\frac{20.9 + 40.2}{2}\right)}{\frac{0.365 + 0.70}{2}} \right] + \frac{0.428}{2}$$

$$R_R = 0.143 + 0.214$$

$$\underline{R_R = 0.357 \text{ m}}$$

8.25.1 Power Model (179 kg)

The basic power model from equation (7) is

$$\text{Input power} = W.\mu_S \left[w_R^3 . R_R^2 + 39.5\ .n^3.r^2.(\Omega+\gamma) \right] + W.g.h.n.$$

Now, by applying the specific variables for the geometry of the mixer

$$\therefore \text{ Input power} = 179.\mu_S \left[w_R^3 . 0.357^2 + 39.5\ n^3.\ 0.152^2\ (1.064) \right] + 179 \times 9.81 \times 0.386 \times n$$

$$\therefore \text{ Input power} = 179\ \mu_S \left[w_R^3 .\ 0.127 + 0.97\ n^3 \right] + 678\ n. \quad \text{watts} \text{ — } (13)$$

8.25.2 Power Model (172 kg)

The basic model is again taken from equation (7) and by applying the known values

$$\text{Input power} = 172\ \mu_S \left[w_R^3\ 0.127 + 0.97\ n^3 \right] + 651\ n \text{ watts} \text{ ——— } (14)$$

$$= 170\,\mu_S \left[w_R^{\,3}\, 0.293^2 + 39.5 \times n^3\, 0.152^2\, (1.64) \right] + 179 \times 9.81 \times 0.386 \times n$$

$$\text{Input power} = 170\,\mu_S \left[w_R^{\,3}\, 0.086 + 1.50 \times n^3 \right] + 678\, n$$

8.25.3 Power Model Results

Using the power models in 18.25.1 and 2 and the values of w_R and μ_S from previous work, Table 26 has been constructed giving the predicted powers for both 179 kg and 173 kg.

				Power Calculated	
				179 kg	173 kg
SLUMP (mm)	w_R	n	μ_S	kW	kW
10	6.69	1.88	.464	4.97	4.77
20	7.68	1.97	.276	4.54	4.37
40	8.83	2.07	.138	3.78	3.63
60	9.57	2.12	.085	3.27	3.14
80	10.14	2.16	.056	2.89	2.78
100	10.60	2.20	.041	2.68	2.57
120	10.99	2.22	.031	2.50	2.40
140	11.34	2.25	.025	2.40	2.31
160	11.64	2.27	.021	2.33	2.24
180	11.92	2.28	.018	2.30	2.19

Table 26

The results from the above tables have been plotted 8.23 together with those from the experimental results.

8.26 CONCLUSIONS FROM PHASE 4

The conclusions of the work carried out in Phase 4 are summarized below.

8.26.1 Capacity

The mixing capacity has been increased from 136 kg to 179 kg by the

increase in the stator radius to 0.152 it would appear that the use of an accurately machined stator to 0.152 would possibly increase the capacity to 181 kg. With the use of the more fluid mixes 181 kg was found to mix in a satisfactory way.

8.26.2 Discharge of Mix

The discharge of the mix at weights up to 185 kg was again found to be satisfactory, the only adverse effect noted was a tendency for more of the mix to be retained around the stator. This was probably due to the surface finish of the repaired stator.

8.26.3 Volume Model

Again the model appears to give a good indication of the volume to be expected from the machine. The calculated volume was equivalent to 179 kg and the actual mass was 172 kg giving a percentage error of 5.7% and given that the true profile of the stator may not be 0.152 this result was considered acceptable.

8.26.4 Power Model

In considering the power models used against the experimental results a good agreement was noted. This was surprising as the roughness of the repaired stator would have impaired the mix flow. It is assumed that the mix is forming its own boundary layer and thus providing a lower friction value on the stator surface.

8.26.5 General Comments

The error in machining the stator did give problems in obtaining meaningful values for the test program, but did prove that the mixing action is not sensitive to the surface finish of the stator.

The wear noted at the base of the stator gave a discontinuity in the fluid flow across the gap, but despite this the seal did not leak at all during the test program.

8.27 FUTURE WORK

It is indicated that a series of tests using an accurately machined stator possible at a radius of 0.178 would give useful results, as the 0.178 stator radius should in theory be the limiting condition for this machine. (O/D of machine = 0.711 and max toroid size is $\frac{D_T}{4}$ = 0.178.

But it is felt that at this stage enough information and verification of the models has been carried out to enable sufficiently accurate predictions to be made to allow a preproduction mixing machine to be designed.

One area which was thought to be worthwhile pursuing was the collection of an accurate film record of the mixing action. This was carried out using high speed cine equipment and is described in Section 8.28.

8.28 HIGH SPEED CINE FILM

8.28.1 General

In order to obtain a record of the mixing action a high speed cine film is to be taken.

8.28.2 Method

A local specialist industrial photographer was contacted and asked to carry out the necessary photography.

In addition, it is seen that the only area which has not been verified is that the Phase 4 machine produces concrete of the same properties as that in the Phase 1 testing, but it can be said that the visual indications of the mixed concrete give a good indication of the standard of mixing and in all cases no differences was discernible in the mixes. The setting up of a new test program using the Rapid Analysis Machine would be indicated

but it is suggested that the 0.152 stator machine should be investigated further before this is considered, a series of cube tests would give a reasonable low cost indication of the overall quality of the concrete produced.

8.28.3 Results

The photography was carried out using a Hitachi High Speed cine camera. The mix photographed was that of aggregate alone, the reason was to obtain better definition of the movement of the mix. The disc speed was shown in Table 27.

MIXER SPEED	ROLL	ANGLE OF SHOT	CAMERA SPEED
175 r.p.m.	1	OBLIQUE	1800 f.p.s.
250 r.p.m.	2	OBLIQUE	1800 f.p.s.
175 r.p.m.	3	OBLIQUE	1300 f.p.s.
175 r.p.m.	4	OVERHEAD	1500 f.p.s.

Table 27

8.28.4 Conclusions

The resulting film was of good quality and shows the mixing action well. At this stage the film will only be used for reference.

8.29 GENERAL CONCLUSION ON THE ROTARY MIXING MACHINE

The main conclusions are listed under the following headings:

1. Mix quality.
2. Energy consumpton.
3. Capacity.
4. Compressive strength.
5. Rotor seal.
6. Rotor covering material.

7. Discharge.

8. Volume model.

9. Power model.

10. Predicted large size mixers.

11. Mechanical advantages.

12. Disadvantages.

13. Power.

8.29.1 Mix Quality

The quality of the mix as indicated by the Phase 1 tests, using the Rapid Analysis Machine, was as good as any other mixer on which data is available. The quality was produced in a shorter time (10 to 20 secs) and the workability of the resulting concrete was good.

8.29.2 Energy used in Mixing

The power required by the machine was less than that used by the Cumflow (Pan Type) mixer by a factor of 2.25 for a given rate of concrete production, and the Cumflow is noted as having one of the lowest power requirements in its class of machine.

8.29.3 Capacity

The capacity of the prototype machine has been increased from the original 91 kg to 173 kg during the research, it is indicated that using this size of machine (0.731 dia.) the capacity could be further increased to 181 kg. This would involve the investigation of the effect of surface finish of the stator on the capacity.

A further increase may also be available by again increasing the stator radius r to 0.178 or more but this would almost certainly lead to an increase in the rotor speed.

8.29.4 Compressive Strength

The compressive strength of the cured concrete, mixed in this machine was found to be higher than that mixed in either the reversing drum or the pan type mixers. The increase over the reversing drum was for Mix 3 + 6.5% and Mix 1 + 20.8% and for the pan type using Mix 3 + 2.2% and for Mix 1 + 37.5%. These results have been checked for the cement content and found to contain less than the expected value.

The main comment at this stage is that the value for the Rotary machine was based on a small sample size, but even accepting this it seems reasonable to say that the compressive strength is at least as good as the other machines tested.

8.29.5 Rotor Seal

In the original project and in the early development testing the machine was hoped to be perfected using a dynamic sealing action at the rotor/stator interface, that is the speed of the mix across the gap would form a seal.

This method did not work but the introduction of an air flow up through the gap did give the required seal, the flow was gained initially by connecting the shop air line to the lower part of the machine and then allowing the air to flow up through the gap, as the testing progressed the pressure was reduced to less than 172 kN/m^2 with a flow rate of 1.5 m^3/min. It is considered that this is by no means the lowest allowable seal pressure further work with more sensitive equipment will give the optimum values.

8.29.6 Rotor Covering Material

The original development tested and Phase 1 was carried out using a polyurethane rotor covering material supplemented by 3 mm thick drive-off

bars at 90° intervals around the disc. These were later replaced by a material with the trade name Linatex. This material is a natural rubber and is mainly used as an abrasive resistant lining for pipes, bins etc.

The material when fitted to the disc was found to totally replace the polyurethane with the drive-off bars. The only disadvantage of this material is a tendency to peel away from the edges of the disc, its main advantage other than its drive-off properties, is that it can be fitted to the disc in one piece and is pliable enough to fit to the rotor profile.

8.29.7 Discharge

In the early tests the machine would not discharge, this was due to an error in the design. This was later corrected and the discharge was found to be very successful, approximately 95% of the mix being discharged, and this would not be cumulative as the 95% would apply only to each mix, and not 5% of each remaining as in some types of closed drum mixers. It was also noted that the consistency played some part in the amount of mix retained. In the final tests the stator texture was rougher than that of earlier tests and this proved to have a detrimental effect on the mix discharge, tending to retain more of the mix on the stator wall.

8.29.8 Volume Model

In order to be able to predict the volumes of the various sizes of mixing machine, a mathematical model of the mixer was constructed. This model has been modified during the course of the trials and is now considered to be accurate within the limits required for future estimation work.

The Phase 3 model did predict the likely total volume of Phase 4 (0.178 stator/rad) to within 5.7% and this could have been more accurate if the stator profile could have been guaranteed.

The model allows the prediction of the diameters of larger capacity mixing machines.

The model takes the form:-

$$V + 2\pi(r^2\theta)\left[\frac{2}{3}.r.\frac{\sin\theta}{\theta}\right] + \frac{D}{2} \quad m^3$$

Where V = volume (cu. ft.)

r = radius of stator

D_T = diameter of stator (max) - 2r

and θ = semi angle of the angle included by the radius r.

8.29.9 Power Model

In conjunction with the volume model a power model of the process has been constructed. This is based on energy considerations of the mix and has proved to be the best of several models tried.

The model has been refined during the tests mainly in the constants used, the main changes were to the value of μ_S which is the friction coefficient, this varies with the consistency of the mix, i.e. slump.

The Phase 3 model was used to calculate the expected power for the 172 kg mix and proved to be accurate with certain provisos.

The model is of the form shown below:-

$$\text{Power} = W\mu_S\left[\omega_R^3 R_R^2 + 39.5\, n^3 r^2\,(\gamma + \Omega)\right] + W.g.h.n.$$

Where W = weight of mix (kg)

g = 9.81 m/sec^2

μ_S = apparent coefficient of friction

ω_R = mix speed in R direction (rad/sec)

R_R = radius of action of mix

n = number of rotations of mix in r direction

h = equivalent height of mix (m)

r = radius of stator

γ & Ω = stator constants.

8.29.10 Prediction of Larger Size Mixers

By using the above models and their associated equations, the diameter and power requirements of smaller and larger sized machines may be calculated.

8.29.11 Mechanical Advantages

In this type of mixing machine certain advantages over the more conventional mixers are evident, these are summarized below.

a) Construction

The mixer is simple and hence less costly to construct, only comprising a stator, rotor, motor, fan and door mechanism. This compares with the bowl, gears, blades, motor, door mechanism etc.

b) Method of Mixing

The method of mixing used does not involve the stirring of blades in the mix, and this may have advantages in the mixing of lightweight and fibrous concretes, as it will reduce the damage caused by the action of the blades. This may also have advantage in the mixing of normal concretes as the damage and rounding of the aggregates can cause reduction in strength of the final product. This could explain the increase in the compressive strength noted in Phase 1.

The method is extremely fast as the mix maximum strength is achieved in between 10 and 20 seconds. It should be noted that the mixing is completed in a short time but does not have the problems generally associated with high speed mixing machines resulting from the high powers used and subsequent damage to and heat generated within the mix.

c) Air Seal

This has the advantage that the air may be replaced with any gas inert or otherwise in chemical mixing.

d) Size

On an output per hour basis, the mixer is very small relative to other mixers.

e) Cleaning

As no blades are present in the mixing action, the machine is easy to clean, this may be achieved in the case of concrete either by flushing with water and then drying, using the air from the seal, or in the case of other materials, use of absorbent materials such as rag or paper will effectively clean the machine.

f) Heating and Cooling

The mix is circulated around the stator and in each revolution presents a different part of the mix to the stator face. By heating or cooling the stator the required change in the mix temperature may be achieved.

In addition, the air seal may be replaced by a steam seal, hence allowing the simple production of hot concrete, or the concrete may be heated as stated above, hence removing the difficult quality control problem of introducing additional water by injection of steam, it also removes the need for expensive steam generator plant.

g) Access

The machine is so small and simple that, with careful plant design, access can be good without adding significantly to the basic cost of the machine.

h) Maintenance

The maintenance of this machine will be simple, due to the lack of moving parts and hence, wearing parts. The seal faces of the prototype machine have exhibited little wear and this is despite having been run mainly without an air seal. The only other wearing parts are the disc material and the stator which, by careful choice of materials and construction, can be long wearing and simple to change.

j) Versatility

The machine so far has only been tried using concrete, but it is considered that by changing the materials and possible shape of the mixing area many more types of mix can be accommodated, in fact, if concrete can be mixed, it being one of the most difficult mixtures, many more types of mix can be accommodated. The machine appears to work very well on the free flowing powders, i.e. sand and cement, and so the possible development in this area could be the subject of another project.

k) Charging the Mixer

The top of the machine is completely free of equipment, hence allowing the charging system complete freedom.

8.29.12 Disadvantages

The only disadvantage which is evident at this time is caused by the air seal, and the possible additional dust problem caused. This does not appear to be too great in the case of concrete, but would obviously be more of a problem in some chemical processes. To put this in perspective, the problem exists with the present mixing plant and is usually controlled by dust extraction methods. The amount of dust caused by the air would be dependent upon the amount of air or gas used, the amount could be reduced by the use of more elaborate labyrinth seals and control of air pressure.

It also seems possible that the pressure generation system may also form a part of the dust control system, again, this must be the subject of further investigation.

8.29.13 Power

The power used by the Rotary mixer is higher for like amounts of concrete than the Cumflow, by a factor of 4 this supports the theory that higher power inputs produce higher quality concrete.

8.30 OVERALL CONCLUSIONS

The development of the Rotary mixing machine appears to have been a success. The original machine as developed did not function correctly, the mixer now operates in a predictable and reliable way.

The mathematical models of volume and power developed give acceptable results over the range tested, and there is no reason to suspect that the model will not hold true on the machine diameter.

The discharge system is simple and effective and does not use any wearing components.

The actual mixing principle seems to be both simple and flexible, as previously stated concrete is one of the most difficult materials to mix. The actual shape of the machine is critical with regard to capacity, but surface finish and even accuracy of dimensions do not appear to reduce the effectiveness of the mixing action, but do increase the power consumption. The major problem of sealing the machine has been overcome and in some way the use of a blown seal would be an advantage, i.e. introduction of steam etc. The main problems have all been overcome, or would seem to have simple answers. The machine is simple in construction and operation, the power levels are low and this would indicate low wear rates and hence correspondingly low maintenance and service costs.

The necessary ancillary services are simple to provide, these could include heating, cooling, introduction of gases, etc.

In short, the machine would warrant a further period of development to improve on the data available, particularly on large diameter mixers. This would allow the further proving of the mathematical models and allow the development of the mixing action to cover a wider range of materials.

9.00 MARKET SURVEY

In reviewing the market information available from all sources, none gave the type of information required by this project. The majority of the information was second-hand, that is, the reports were mainly the findings of people in the industry aimed at making very specific points. They were sponsored by a company or group and thus contained a bias towards these organizations. The data within the construction industry was small and was not available until it was out of date, or was only available to individuals or companies which subscribe to various sponsoring bodies.

The information available from the company was limited and did not give the facts to enable valid judgements to be made.

With this overall background it was decided that a survey of the main specifiers and users of concrete was required.

9.1 TYPES OF INFORMATION

The type of information required was the overall population of mixing plant in the U.K. together with its type, age, capacity and ancillary equipment used. In addition to this, the criteria used when purchasing new equipment, the types of mix used and their consistency.

To complete the survey the likely new developments in concrete and the construction industry generally as seen by the individual respondents.

It was envisaged that the data obtained from this survey was originally intended to provide the basic questions and respondents for a further survey using the Delphi technique which should have given a more accurate indication of the timing of future events. Due to lack of time this type of survey was not completed, although most of the groundwork was carried out, so the survey could be carried out in the future.

9.2 METHOD OF SURVEY

It is possible to carry out a market survey in several ways, but the three most used are those of:-

a)- Personal interviews.

b) Telephone interviews.

c) Postal questionnaires.

In considering the above methods, the main considerations which influenced the final choice of Method 3, postal questionnaires, were firstly the time available at this stage of the project was limited and it was considered that the preparation of questionnaires and the choice of recipients would give the least personal involvement at a time when the major testing was being carried out. The second consideration was that of cost, this method was the lowest in cost by a factor of 5. The third consideration was that much of the data required at least some research on the part of the respondents, and this did not lend itself to the personal or telephone interview. The final reason was that by using the postal questionnaire, the amount of personal bias was reduced to a minimum.

9.3 QUESTIONNAIRE DESIGN

Having decided to use the postal questionnaire, its design was undertaken, and it proved to be very difficult to achieve a satisfactory compromise between the following:-

a) To try and obtain the data which would be of most use.

b) To ask for the information which would be of simplest access to the respondents in order to maximise the reply rate.

c) To avoid asking for information of a confidential nature.

d) To keep the questionnaire to a reasonable length.

e) To obtain the required information but not to suggest the expected answers.

The basic format of the questionnaire was that of a simple box filling type, partly to allow for ease of completion, but also to allow for ease of analysis. The only part of the questionnaire that used a different type of question was that of criteria for the purchase of mixer, in this case the respondent was asked to rate 10 points in the order which he considered most important when purchasing a concrete mixing machine. At an early stage it was realised that to put these 10 points in order would be difficult, as people tend to be able to choose the most important possible up to three items, and also choose the least important again up to three items, in between these areas a general grey occurs. In order to remove the need for the respondents to choose in this area, they were only asked to select the three most important and the three least important. A small local trial was carried out and the results appeared to be satisfactory. The final page of the document gave the respondent the opportunity to identify themselves if they so wished, or to remove the code number at the bottom of the page if they wished to remain anonymous.

The producers questionnaire design is shown in Appendix F and basically asks the following questions:-

1. What are your product types and production rates.
2. Mixing plant data.
3. Batching plant data.
4. Waste concrete disposal.
5. Types of mix most used.
6. Criteria for mixer purchase.
7. New developments in concrete.
8. Future developments in your industry.
9. General comments.
10. Identification.
11. Future questionnaire.

This questionnaire was also used for the ready mixed concrete producers, but modified versions were used for the specifiers and users of concrete. These are not detailed here but are shown in the full Market Report.

For the Liner salesmen, a modified questionnaire was used, which was more specific in certain areas, this is also included in Appendix F. Each questionnaire was accompanied by a covering letter (Appendix F).

9.4 CHOICE OF RESPONDENTS

The choice of respondents to the questionnaire was based upon three areas. The first was to obtain the views of the producers of concrete, these are mainly those who make concrete products or ready mixed concrete, and secondly those who specify and advise upon the specification of concrete, thirdly the Liner sales force.

a. Product Producers and Ready Mixed Concrete Suppliers

In the choice of respondents in this area, the main interest was that of the parts of the industry using the pan type mixing machines (Cumflow, Teka etc.). These are used in areas where high quality concrete is required and they tend to be the makers of concrete products.

The sponsoring company supplied a list of the most recent firms supplied with machines; also available was a publicity handout from the main competitors (Teka), listing the machines supplied by them, these lists were used as a starting point as the replies would at least contain a representative sample of the two most used machines.

In addition, a product by product analysis was carried out using the Guide to Products in Precast Concrete from the Concrete Year Book. (54) In this analysis each of the products is given a code number and under that code are listed the producers on a county basis. In this case a table was constructed for each county, and then the producers of the

various products filled in finally producing a comprehensive list of products and producers in each county.

These three lists were then cross-referenced and a master list of respondents compiled, this list represented a sample size of approximately 30% of the total.

In the case of the ready mixed suppliers, there are approximately 1050 depots in the U.K., but these are owned by a small group of large companies. The method used in this case to choose the respondents was again the lists supplied by the company and competition, but in addition, the area offices of the large companies were also chosen. The total number of respondents was 77 but this does no represent a particular proportion of the whole.

b. Specifiers and Users of Concrete

In order to gain a broader view of the industry, the following areas were circulated with a modified questionnaire:-

1. Contractors.
2. Consultants.
3. Oil rig manufacturers.
4. Cement and Concrete Association Regional Advisers.
5. Royal Institute of British Architects.

The method used to choose the respondents was broadly similar to that used in the product area, the list provided in (54) were again used and respondents selected at random.

c. Liner Salesmen

To obtain as much information as possible from the salesmen and as stated there was no apparent route by which information could be interchanged between sales force and the technical side of the company. It was suggested that all the sales force should take part in the survey, but using a modified questionnaire, this suggestion was put forward to

the company and accepted.

9.5 QUESTIONNAIRE RETURNS ANALYSIS

A detailed analysis of questionnaires sent is shown in Table 28. The first column gives the total number of questionnaires sent, the second column gives the number of valid respondents possible after the deduction of those who were out of business and "not known at this address". The third column is the actual useful replies received, and the fourth column gives the percentage returns.

		NUMBER SENT	VALID NUMBER SENT	RETURNED COMPLETED	%
1	Product Manufacturing	278	252	43	17
2	Ready Mixed Concrete	78	77	6	8
3	Contractors	35	35	15	43
4	Consultant	44	40	5	12.5
5	Oil Rigs	9	8	0	0
6	C. & C. Association	16	16	6	37.5
7	R.I.B.A.	27	27	0	0
	TOTAL	487	455	75	17

Table 28

* Note the Liner salesmen have not been included in this analysis as they were considered non representative of the general response.

9.6 ANALYSIS OF DATA

The data from each respondent was analysed within its respondent group. The method used was to initially condense the questionnaire to summary sheets. These sheets were analysed by reducing the data into tabular form for each main question heading where this was possible, or in the case of written answers, a list was made and then condensed into overall headings.

9.7 SUMMARY OF POSTAL SURVEY RESULTS

9.7.1 Products

Batches Produced Per Hour

Where information on the quantity of concrete produced per year was included, it is possible to calculate the number of batches per hour. This was carried out by taking the number of hours per year (240 x 8) and dividing the yearly output by this ot obtain the batches per hour. The results are detailed in Table 29.

REF	BATCH/HOUR	REF	BATCH/HOUR	REF	BATCH/HOUR
1	8.4	10	83.3	19	1.3
2	6.5	11	18.8	20	5.5
3	7.0	12	6.3	21	11.0
4	6.3	13	2.6	22	18.8
5	18.1	14	6.5	23	10.0
6	1.6	15	1.3	24	1.6
7	55.5	16	1.9	25	1.8
8	2.2	17	6.8	26	5.4
9	8.6	18	11.1		

Table 29

By considering the above figures and grouping them into hourly output, the two outputs over 20 per hour have suspect data sources, so these have been disregarded.

Less then 2 batches/hour	25%
Up to 4 batches/hour	33%
Up to 6 batches/hour	41%
Up to 8 batches/hour	66%
Up to 10 batches/hour	75%
Up to 20 batches/hour	100%

In viewing these figures they would indicate either:-

1. A general practice of oversizing mixing plant.

2. An overestimation of mixing plant capacity by the manufacturer. They usually quote up to 40 or 60 batches per hour.

The following provisos must be made:-

a) The need for mixing may be over shorter periods, a large quantity may be needed at certain times, but this is not as true in the manufacture of concrete products as it is in the ready mixed and site mixed concrete.

b) The information gained from this survey may be biased due to the depressed state of the construction industry at the time of the survey.

Capacity of Mixers

The size of mixers used by the respondents are detailed in Table 30.

CAPACITY m^3	NUMBER	% OF TOTAL	CUMULATIVE TOTAL
0.10	3	3.2	3.2
0.17	2	2.1	5.3
0.20	7	7.4	12.6
0.25	4	4.2	16.8
0.29	4	4.2	21.1
0.35	5	5.3	26.3
0.38	12	12.8	38.9
0.50	20	21.3	60.0
0.68	2	2.1	62.1
0.75	5	5.4	67.4
1.00	12	12.8	80.0
1.25	1	1.1	81.1
1.50	8	8.5	89.5
2.00	8	8.5	97.9
above 2	2	2.1	100.0
	94		

Table 30

A distribution chart is shown in Plot 9.1 this indicates the largest population is at the 0.4, 0.5 and 10 cu metre size.

Age of Mixing Machines

The age of mixing machines used by the respondents are detailed in Table 31.

AGE YEARS	NUMBER	% TOTAL	CUMULATIVE TOTAL
1	4	3.9	3.9
2	2	2.0	5.9
3	9	8.8	14.7
4	9	8.8	23.5
5	10	9.8	33.3
6	4	3.9	37.3
7	3	2.9	40.2
8	6	5.9	46.1
9	2	2.0	48.0
10	14	13.7	61.8
11	1	1.0	62.7
12	1	1.0	63.7
13	8	7.8	71.5
14	1	1.0	72.6
15	13	12.7	85.3
16	1	1.0	86.3
20	7	6.9	93.1
25	5	4.9	98.0
30	2	2.0	100.0
	102		

Table 31

A distribution chart of the ages is plotted in Plot 9.2, in viewing these figures the buying cycle would appear to be five years, with the peak in 1972 spread due to the ability of most suppliers to deliver, hence this should indicate a further buying period in 1979 - 80, these being replacements for those mixers purchased in 1972 - 73 and 1967. It should

be noted that the present low rate of economic growth will probably set this back by a number of years.

Steam and Water Control

The sample number who responded to this question was 77 and the replies are summarized below:-

Number fitted with water control	=	48 (62.4%)
Number satisfied with water control	=	42 (87.5%)
Number which are not fitted with water control	=	6 (12.5%)
Number fitted with steam injection	=	3 (6.25%)
Number who intend to fit steam injection	=	4 (8.3%)

The inference from these results are that 62% of mixing machines are fitted with some type of moisture control equipment and of these 88% are satisfied with the results obtained. This did not confirm the impression which had been found from the sponsoring company or personal interviews, the comment would be that no qualitative data is available but it can only be assumed that the quality of concrete produced is within the specifications required. Steam injection is only fitted by a small percent of respondents, but from the indication this could double to approximately 15% in the near future.

Mix Types

The respondents were asked the types of mixes used and the approximate quantities of each. By factoring their total output by the percentages stated, and then combining the results, an idea of the division of mix consistencies and type could be found. These are summarized in Table 32.

The majority of concrete used in products is of low slump (70%), this type of mix is used in areas where the products have to be demoulded quickly, pipes are a typical example where the moulds are removed within

SLUMP	PERCENTAGE
0 mm	70.0%
25 mm	1.9%
50 mm	5.6%
60 mm	8.8%
65 mm	7.5%
70 mm	4.5%
70-90 mm	1.1%

Table 32

seconds of the vibration being complete. The next major one is that between 50 and 70 mm slump (26%) and the more fluid mixes 70 to 90 mm slump form a very small proportion (1.0%).

This distribution is confirmed by the extensive use of positive action mixers which are most adept at mixing the stiffer types of concrete.

Trends

The indications for future trends in the use of new types of concrete are summarized in Table 33.

CONCRETE TYPES	TREND RELATIVE TO PRESENT LEVEL
Polymer	Stable
Steel Fibre	Slight increase
Glass Fibre	Increase (++)
Plasticiser	Stable
Lightweight	Increase (+++)

Table 33

+ indicates degree of trend maximum (+++)

Criteria for Mixer Purchase

The criteria considered when purchasing the next mixing machine were tabulated from the individual questionnaires and then combined giving the composite Table 34.

RANK	CODE NUMBER	CRITERIA
1	10	Quality of mixing
2	4	Ease of maintenance
3	3	Economy of operation
4	5	Speed of mixing
5	1	Price
6	9	Suitable discharge door position
7	8	Environmental
8	7	Availability of correct size
9	6	Availability
10	2	Modern design

Table 34

It would seem reasonable that the quality of mixing should be given the most important position as the products made are in general of high quality or low price.

9.7.2 Ready Mixed Concrete

Water Control

Number in Sample 8.

Number using water control 1 (12.5%).

Number satisfied with water control 1 (12.5%).

In the case of R.M. it is difficult to find a suitable method of water control when mixing in a truck mixer, the only method is to use the water control in a pan type mixer prior to dumping in the truck mixer. The small sample size should also be noted.

Mix Types

A summary of the mix consistencies used are given in Table 35.

Total amount considered 471.000 cu metres.

As would be expected, the concrete mixed in ready mixed plants is generally more fluid than that used in the product sector, this is mainly

due to the mixing methods used which are not suited to drier mixes and also the methods used in the site handling and placement of the concrete.

SLUMP	PERCENTAGE
50	37.6%
70	52.6%
100	9.8%

Table 35

Trends

The indication for future trends are given in Table 36, as may be seen the types used by the ready mixed concrete industry are more limited and only two types are considered.

In the case of the plasticiser, this is mainly used for self-levelling floors, but is very sensitive to incorrect batching. The limitation in replies to this section is probably due to the inability of the mixing equipment to cope with the fibre types of concrete.

CONCRETE TYPES	TRENDS RELATIVE TO PRESENT LEVEL
Lightweight	Slight increase
Plasticiser	Slight increase

Table 36

Criteria for Mixer Purchase

The criteria considered when purchasing the next mixing machine are given in Table 37. The first five criteria are the same as those in the products section, but are changed in order of importance, this indicates the different emphasis within this part of the industry, that is, cost is of paramount importance.

RANK	CODE NUMBER	CRITERIA
1	1	Price
2	10	Quality of mixing
3	4	Ease of maintenance
4	3	Economy of operation
5	5	Speed of mixing
6	8	Environmental
7	7	Availability of correct size
8	6	Availability
9	9	Discharge door position
10	2	Modern design

Table 37

9.7.3 Contractors

In the case of contractors, the division between the use of site and ready mixed concrete was investigated.

Site mixed concrete 27%

Ready mixed concrete 73%.

Capacity of Mixers

The size of mixers used by the respondents are detailed in Table 38. The capacity is centred around 0.34 m^3 with over 90% being under 0.50 m^3. This indicates the wide site use of reversing drum mixers. This distribution is shown in Plot 9.3.

Age of Mixing Machines

The age of site mixing machines are given in Table 39, and are plotted in 9.4. The age seems to peak at eight years, this would indicate that some are ready for replacement.

It should be noted that the peaks in Plot 9.3 and 9.4 are caused by a single respondent's reply, but as this was one of the largest contractors it is still considered a valid point.

CAPACITY M^3	NUMBER	%	CUMULATIVE %
0.02	1	0.34	0.34
0.2	25	8.50	8.87
0.3	1	0.34	9.22
0.34	209	71.33	80.55
0.38	18	6.14	86.68
0.40	6	2.05	88.74
0.50	6	2.05	90.79
0.57	12	4.10	94.88
0.76	2	0.68	95.56
1.00	4	1.37	96.93
1.50	1	0.34	97.27
3.00	2	0.68	97.95
4.00	4	1.37	99.32
5.50	1	0.34	99.66
7.50	1	0.34	100.00
Sample size	293		

Table 38

AGE	NO	%	CUMULATIVE %
1	1	0.36	0.36
2	2	0.71	1.07
3	13	4.63	5.69
4	39	13.88	19.57
5	19	6.76	26.33
6	-	-	26.33
7	-	-	26.33
8	201	71.53	97.86
9	-	-	97.86
10	3	1.07	98.93
11	-	-	98.93
12	1	.36	99.29
13	-	-	99.29
14	-	-	99.29
15	2	0.71	100.00
Sample size	281		

Table 39

Trends

The indications for future trends are shown in Table 40. The only area of increase was that of steel fibre concrete.

TYPE	TREND RELATIVE TO PRESENT
Lightweight	Stable
Plasticiser	Stable
Steel Fibre	Increase

Table 40

Criteria for Mixing Machine Purchase

The criteria considered when purchasing the next mixing machine are shown in Table 41.

RANK	CODE NUMBER	CRITERIA
1	10	Quality of mixing
2	3	Economy of operation
3	1	Price
4	5	Speed of mixing
5	4	Ease of maintenance
6	6	Availability
7	7	Availability of correct size
8	2	Modern design
9	8	Environmental
10	9	Suitable discharge door position

Table 41

Again, the first five items are the same as previous replies, but in a different order.

9.7.4 Consultants

In the case of consultants, the replies were mainly in the written suggestions area, so the specific answers are limited.

Trends

The indications for new areas of concrete development are shown in Table 42.

CONCRETE TYPE	TREND RELATIVE TO PRESENT LEVEL
Lightweight	Slight increase
Steel fibre	Increase
Glass fibre	Increase
Plasticiser	Definite Increase
Polymer	Slight Increase

Table 42

Criteria for Mixer Purchase

In the list of criteria for mixer purchase, the only one displaced from the previous lists was that of speed of mixing.

RANK	CODE NUMBER	CRITERIA
1	4	Ease of maintenance
2	1	Price
3	10	Quality of mix
4	3	Economy of operation
5	6	Availability
	7	Availability of correct size
	8	Environmental
8	2	Modern design
	5	Speed of mixing
10	9	Suitable discharge door

Table 43

9.7.5 Liner Personnel

Trends

In order to obtain as useful an answer to this area as possible the question was re-worded to give the number of respondents called upon to supply mixing plant for the following specialist applications.

a. Lightweight

Yes 59% (Total 17)

No 41%.

b. Steel Fibre

Yes 40% (Total 15)

No 60%.

c. Glass Fibre

Yes 64.7% (Total 17)

No 35.3%.

d. Superplasticiser

Yes 12.5% (Total 16)

No 87.5%.

e. Polymer

Yes 20% (Total 15)

No 80%.

Criteria for Mixing Machine Purchase

The question was again re-worded to ask the salesmen the most asked for qualities in their machines. The answers are summarized in Table 44. The first five requirements are again the same as previous tables, but the order is changed.

RANK	CODE NUMBER	CRITERIA
1	10	Quality of mixing
2	1	Price
3	3	Economy of operation
4	4	Ease of maintenance
5	5	Speed of mixing
6	6	Availability
7	7	Availability of correct size
8	8	Environmental
9	9	Suitable discharge door position
10	2	Modern design

Table 44

9.7.6 Summary of Answers Given to Questions

The second portion of the questionnaire was taken up with questions on the more general areas of the survey. The method used to sort the replies was to write down the various comments on each topic in a card index system, and then sort the cards into various overall headings.

The total list of these headings and the general comments included in them are detailed in Appendix G.

9.8 MARKETING PHASE 3

In the initial part of the project, a summary of how the sponsoring company saw the market place was given, this is detailed in this section. The information was given under two headings, firstly export, and secondly home.

9.8.1 Export

The export market at the initiation of the project was seen under the following headings.

a) Manufacture Under Licence

In many of the countries in the developing world, the smaller and medium sized mixing machines are being manufactured under licence, or just a simple copy being made without any agreement.

b) Overseas Concrete Product Manufacturers

Overseas product industries are poorly developed and are largely hand fed tilting drum mixers feeding hand presses. Again, as the scale of constructional projects increases, the demand for concrete products will not be met by hand methods, so more sophisticated plants including Cumflows and automated presses will be required.

c) Ready Mixed Concrete Industries

When the developing countries are in a position to need a ready

mixed concrete industry there will be a requirement for mixers and associated batching plants.

9.8.2 The Home Market

The amount of official government based statistics are few and because of the wide headings under which this type of product is based, they can be extremely misleading, hence the data given in Table 45 is merely an approximate guide to the market place.

	TYPE OF MIXER	TOTAL	MANUFACTURER	
A	TILTING DRUM MIXERS			%
	BARROW TYPE/ROLL ALONG	15000	BELLE	75
			ERF	15
			BENFORD/PARKER	10
			OTHERS	
	HALF BAG 5/3½	5300	WINGET	30
	ONE BAG 8½/6/7/5	2500	BENFORD	30
	10/7	500	PARKER	15
			LINER	15
			MILLAR	5
			OTHERS	5
		23300		
B	PAN MIXERS	400	LINER	40
			TEKA	30
			BENFORD	15
			WINGET	10
			OTHERS	5
C	REVERSING DRUM	200	WINGET	50
			BENFORD	45
			OTHERS	5
D	PADDLE MIXERS		MILLER	90
			STOTHART & PITT	5
			OTHERS	5

GRAND TOTAL 23930

SALES OF MIXERS PER YEAR

Table 45

9.8.3 Liner Sales Position

The main area of interest at this time is the Reversing Drum and Pan Type mixing machines. The data available on these machines is given in Table 46 for the Reversing Drum and in Table 47 for the Pan type.

YEAR	69/70	70/71	71/72	72/73	73/74	74/75	75/76	76/77	TOTAL	%
HOME	13	10	8	14	11	2	10	-	68	30%
EXPORT	30	34	24	8	4	1¾	38	-	156	70%
	43	44	32	22	15	20	48	-	224	

REVERSING DRUM

Table 46

By using Table 47 and applying an equalization factor, in this case the 1978 selling price for each mixer size, the table may be reduced to a single comparative figure for each year, this will indicate the general sales trend in mixers. The equalized table is shown in Table 48.

	69/70	70/71	71/72	72/73	73/74	74/75	75/76	76/77
RP 50/100	45425	51350	65175	37525	65175	49375	41475	31600
200	79275	38052	19026	41223	31710	41223	15855	12684
400	117440	62390	62390	69730	80740	135790	69730	73400
550	156896	83351	53933	78464	102963	102963	78448	34321
850	213305	236365	57650	126830	155655	80710	51885	69180
1250	-	10800	43200	64800	108000	86400	43200	43200
1500	61200	36720	24480	61200	61200	73440	48960	48960
3000	-	-	-	-	-	-	-	19120
TOTAL	673541	519028	325854	479772	605443	569901	349553	332465
$TX10^6$	0.67	0.52	0.33	0.48	0.61	0.57	0.35	0.33

Figures in £ corrected to 1978 prices.

Table 48

The results are shown in Plot 9.5 and indicates a downward trend in sales to a point comparable with 1971/72 levels, but this would be expected as the overall economic situation has been poor.

MARKET SURVEY														
MIXER		69/70	70/71	71/72	72/73	73/74	74/75	75/76	76/77	TOTAL	H	E	%	ACC %
RP50/100	H	18	20	30	16	33	18	19	12	166	166		23%	
	E	5	6	3	3	-	7	2	4	30		30		
200	H	21	8	5	9	8	12	3	4	70	70		10.3	33.3
	E	4	4	1	4	2	1	2	-	18		18		
400	H	20	15	13	16	16	29	11	18	138	138		21.5	54.8
	E	12	2	4	3	6	8	8	2	45		45		
550	H	23	8	7	13	15	13	8	5	92	92		16.5	71.3
	E	9	9	4	3	6	8	8	2	49		49		
850	H	26	25	6	14	23	10	4	6	114	114		20.2	91.50
	E	11	16	4	8	4	4	5	6	58		58		
1250	H	-	1	3	6	7	7	4	4	32	32		4.3	95.8
	E	-	-	1	-	3	1	-	-	5		5		
1500	H	3	1	1	4	3	6	3	4	25	25		4.0	99.9
	E	2	2	1	1	2	-	1	-	9		9		
3000	H	-	-	-	-	-	-	-	1	1	1			
	E	-	-	-	-	-	-	-	-	0		0	0.1	100.0
TOTAL		154	117	83	100	128	124	78	68	852	638	214		

Table 47

CUMFLOW

H = HOME E = EXPORT

9.9 INDEPENDENT SALES INFORMATION

In the area of independent sales data, the sources are very limited, in fact, the only two available are:-

a) The Federation of Manufacturers of Construction Equipment and Cranes.

b) Business Monitor (Business Statistics Office).

In the case of the F.M.C.E.C. no statistics are available on pan type mixers, and in the case of the Business Monitor, the information is of a very limited type. But using the data available from these sources and some in house data, the following table of % of the market for Liner has been compiled. Again, a downward trend is noticeable, this takes into account the depressed market situation. Table 49.

YEAR	LINER %	HOME/EXPORT RATIO
1974	6.8	2.06
1975	7.6	0.75
1976	7.2	0.89
1977	5.1	1.26

Table 49

It is also of interest to compare the home/export sales ratio for each year, this indicates that the company is selling more on the home market. This is in fact marginally true, but the main reason for the change is the depressed export trade. The present ratio for the industry is 0.35 hence Liner are becoming more dependent upon the home market for mixer sales, this is in fact borne out by the first quarter of 1978 figures for which the ratio is 3.4.

Reversing Drum Machines

It is possible to directly compare the figures for the following years of Reversing Drum mixers with those sold by the other members of the F.M.C.E.C. Table 50.

YEAR	LINER	OTHER	% of F.M.C.E.C.
1975	20	1560	1.3
1976	48	1823	2.6

Table 50

9.10 SURVEY OF CEMENT PRODUCTION

In order to obtain a world wide picture of the magnitude of the possible market for the mixing machines, it is reasonable to look at the overall world figures for the production of cement. From the U.N. World Statistics the following figures are taken:-

1. World production of cement in 1975, 690,000,000 tonnes as compared with 457,000,000 tonnes in 1966 and a world maximum of 696,000,000 in 1974.
2. The distribution by continent is shown in Table 51.

	OUTPUT TONNES ('000)	
	1975	1966
Africa	23,000	12,000
America (North)	90,000	85,000
America (South)	34,000	17,000
Asia	168,000	82,000
Europe	248,000	176,000
Oceania	6,000	5,000
U.S.S.R.	122,000	80,000

Table 51

As may be seen, the major increased areas of production are,

1. Africa, 2. Asia, 3. Europe, 4. Russia, 5. South America.

As can be seen, these included the main developing areas: Africa, Asia and South America.

9.11 SUMMARY OF SURVEY

From the postal questionnaire replies, the data in trends and criteria for mixer purchase may be tabulated.

9.11.1 Trends

Table 52 shows the trends for each new development in concrete, the main areas of increase in production would seem to be in glass and steel fibre concrete in general, and in lightweight in the products area.

PRODUCT	PRODUCTS	READY MIX	CONTRACTOR	CONSULTANT
Lightweight	Large Increase	Slight Increase	Stable	Slight Increase
Plasticiser	Stable	Slight Increase	Stable	Definite Increase
Glass Fibre	Large Increase	-	-	Increase
Steel Fibre	Slight Increase	-	Increase	Increase
Polymer	Stable	-	-	Slight Increase

Table 52

9.11.2 Criteria for Mixer Purchase

In the replies to this question, the individual groups of respondents can be directly compared. This may be carried out in two ways:

1. To simply add the rank numbers and then re-rate the criteria based on this new ranking.
2. To weight the simple ranking by multiplying the number of respondents in each group, this gives the effect of giving the largest group the greatest influence.

Both these methods have been carried out and the results are shown in Table 53. It can be seen that the top five parameters are the same in both cases, but are in differing positions, the two common positions are those of quality of mixing joint first, and speed of mixing joint fifth. In general, the weighted table is thought to be most representative.

	WEIGHTED		NON-WEIGHTED
1	Quality of mixing	1	Quality of mixing
2	Economy of operation	2	Price
3	Ease of maintenance	3	Economy of operation
4	Price	4	Ease of maintenance
5	Speed of mixing	5	Speed of mixing
6	Availability of correct size	6	Availability
7	Environmental	7	Availability of correct size
8	Availability	8	Environmental
9	Suitable discharge position	9	Suitable discharge door
10	Modern design	10	Modern design

Table 53

9.11.3 General Comments on Marketing

In considering the market data, the following points can be made:

a) It would appear that the company is losing its market share, both at home and in the export markets.

b) In the area of pan mixers, the company's market share dropped by some 40% over the last seven years. It is significant that seven years ago the Teka company entered the U.K. market and now has approximately 40% of that market.

c) In the Reversing Drum mixer market, the company does appear to have improved its market share during 1977 by 100% to 2.6% of the F.M.C.E.C. figures.

d) The main conclusions to be drawn from the above situation, is that the overall production of mixing machines is increasing in the U.K., Liner share is decreasing.

e) The sales data from the company is limited and a review of the sales reporting system may be advisable.

f) Cement production data is readily available from several sources and this at least indicates the present maximum users of cement and hence

concrete mixing and handling equipment. The world wide production figures show a slight decline in production for the year 1975, but a change in the main areas of use is noted in the period 1966 to 1975. This suggests definite areas of sales activity in the future.

g) Little work has been carried out on the overseas marketing side of the project, but it would appear from the various meetings attended and discussions held, that the main area of development is that of complete turn key installations which include the total system, be it concrete products or major construction project. The main area of problem seems to be the lack of skilled site workers and the high cost when they are available.

9.11.4 Market Survey Comments

A resume of the market survey comments are given in this part of the report, a full description is given in Appendix G.

9.11.4.1 Future of Construction Industry

The timing of the up turn in the construction industry in the U.K. would seem to be between 1980-1982.

9.11.4.2 General Comments (including Liner Salesmen)

a) Company Image *

Old fashioned and needs to pay more attention to styling.

b) Workmanship *

The standard of workmanship was generally said to be poor, this seems to be mainly due to the final inspection.

c) Sales *

The main point seems to be the lack of feedback from the sales force which leads to a slow response to the market changes.

A more flexible policy to discounts is also considered necessary.

d) Cumflow *

1. Maintenance seems to be expensive and is too slow and poorly carried out.
2. The basic machine is expensive and so are the spares supplied.
3. The machine is elderly in design and the discharge door is considered unsatisfactory.
4. The machine is reliable with relatively low wear rates (qualified by the comment that the latest machines do not appear to be so good with regard to the wear rates), coupled to long life and good spares availability.
5. The quality of mixing is high with this coupled to the speed of mixing in some cases.
6. The machine is simple to operate.

e) Advantages of Other Manufacturer's Equipment in Order of Preference *

Group 1. Changeable door position.

Group 2. Lower cost.

Portable batching system.

Group 3. Modular design.

Dust covers.

Small compact size allows fitment into any batching point.

Method of discharge.

Group 4. Hydraulic operation.

High quality of quotation presentation.

Discount offers.

f) Health and Safety at Work Act

The new generation of mixing plant must comply with the present and likely new legislation, particularly on noise and dust.

g) Maintenance

This must be simple, otherwise it gets neglected; possibly automatic

preferably none.

Wear rates should be reduced and so should the cost of spares.

h) Needs in New Plant (Mixers)

Modular design on mixing machines.

Waste re-cycling system.

.75 m^3 mobile mixer.

Easy to erect.

Automatic wash out system.

j) New Developments in Concrete

1. Depletion of natural aggregates indicates high production plants based on rail heads or ports, also indicates use of man-made aggregates.
2. Super Plasticisers. Rapid increase in their use to save cement but this will require improved control in dispensing.
3. P.F.A./Cement Blend. Increase in use to reduce heat of hydration.
4. Lightweight Aggregates. Increase in use for thermal insulation but may be limited by cost for major structural use. Problems in weighing and mixing.
5. Glass Reinforced and Steel Reinforced Concrete. Increase may be limited by difficulty in mixing, G.R.C. will be developed into structural material in next five years.

k) Quality Control

A general increase in quality control is required, this may be by the wider use of wet analysis methods.

l) Water Control

A more effective method of control is needed, particularly in the moisture content of aggregates.

m) Slump Control (Workability)

Effective and automatic method of workability control needed.

n) Automatic Systems

A foolproof automatic control system which may be computer controlled, but must be reasonably priced and reliable. The equipment must be as fast as the manual system and issue certified content documentation. The main incentive to full automation is the reduction in availability and subsequent high cost of skilled site labour.

p) Present Equipment

In the survey of present mixing equipment, the main types of machines were of a type, i.e. they either tipped the mix from one end of a barrel, or they were stirred by some form of fingers, both of these methods have disadvantages and are not all suitable for all types of mix. New types of mixers are being developed for specific applications but are not suitable as a general purpose mixing machine. The present machines tend to use high powered motors and hence generate large amounts of heat, have high wear rates and are expensive to run.

* Liner salesmen comments only.

9.12 THE LINER COMPANY LIMITED

In order to integrate the market information and to formulate a suitable corporate strategy, a wider knowledge of the sponsoring company was also required.

Product Range

The Liner Company Ltd was formed approximately 60 years ago and has been producing equipment for the concrete and construction industry since this time. The range of equipment produced is listed in Tables H1 and H2 in Appendix H.

Table H1 details the range of mixing equipment made. This ranges from the small Cadet size mixer using the tilting drum mixing action, through hopper feed variants, up to Reversing drum mixers named the Fluiverse and Marshall. At the top end of the mixing range is the Cumflow which is available in sizes from the laboratory model R.P. 100 to the 3 m^3 output R.P. 3000.

Table H2 details the other construction equipment made. The dumpers range from a 750 kg Roughrider, through to the four-wheel drive Marathon with a capacity of 2550 kg. A normal type of forklift is also made, together with a mortar mixer and portable saw bench.

The latest and most interesting of the construction equipment produced is the Giraffe site placing vehicle. This is a new concept in on-site materials handling. The Giraffe has no traditional forkmast, the fork carriage is mounted on a pivoted telescopic boom. This boom means that using the lifting and telescopic action loads can be placed through windows over scaffolding and even below the level of the machine.

The fork carriage has 152 mm of side shift 24° of rotation and horizontal control, this gives precision placing of the load without damage and waste of time.

The SPV can lift loads of up to 2032 kg to a height of 6.91 m and a 1016 kg load can be lifted to a height of 8.53 m. An automatic cutout to prevent the machine becoming unstable has been incorporated, this system is operated by the use of a strain pin and suitable coupling electronics.

Company Structure

The company is not generally in a high technology part of the industry, but a move has been made towards more sophisticated equipment in the adoption of the Giraffe, a new factory has been built to specifically produce the S.P.V.

The production facilities have been improved over the last few years and most of the road vehicle are now produced on a flow line principle. The stores have recently been modernized, using side stacking fork lifts. This gives the maximum available storage space per unit floor area.

The company is modernizing its plant and production methods, but the main area which needs to be reviewed is that relating to the design of future equipment, this problem has been tackled in the area of an on site placing with the Giraffe, but as of date the mixing side has not received much attention, hence this project into the company strategy for the next few years. The main company is sited in Gateshead, but a subsidiary company is sited at Cheltenham, this firm is called Liner Croker Ltd., and is the part of the company which makes and markets batching plant. They also are the selling outlet for the Cumflow pan type mixing machine.

The main product line of Liner Croker is the range of Selecta batch and Selecta plant units. This equipment was launched this year to meet the forecast upturn in the precast concrete, ready-mix concrete and civil engineering industries. The units are designed to be infinitely variable, with each main pre-wired and pre-piped section being interchangeable and easily transportable to suit different contracts and locations.

In addition to their own range of equipment, the company are agents for Skako Mechanical Handling Equipment and Pedershaab Pipe Making Machinery also in the near future a link with a German company of weigh gear manufacturers is thought likely.

9.13 LINER CONCRETE (TAKEOVER)

Early in 1978 a takeover bid was made for Liner Concrete. The bid was from the Thomas Tilling Group, one of the largest industrial holding companies in the U.K. The background is best explained by the cutting from "The Financial Times" (Fig. 56). The main areas of immediate change was that of the method used to sell Liner products, the company prior to

the takeover, sold from a chain of nationwide depots, these have been closed and the company now sells through various agents. The Tilling organization contains the basic selling network of William R. Selwood, this company has a wide network, mainly to the south of London, but is rapidly supplementing this with depots in the north, and this would seem to be an obvious sales outlet for the Liner plant. The changes brought about by the takeover have made very little difference to the project, in fact, the only action so far noted, is the definite availability of finance to support the development of any new marketable equipment.

Tilling offers £3m. for Liner

Thomas Tilling, one of the largest industrial holding companies in the U.K., has emerged as the bidder for Liner Concrete, the construction equipment specialist.

The bid, recommended by Liner and supported by Ferguson Industrial Holdings which intends to accept in respect of its 29.9 per cent. shareholding, takes the form of a share swop. On offer are 4 Ordinary 20p shares of Tilling for every 13 Ordinary 10p shares in Liner. With Tilling's shares standing at 104p, this values each Liner share at 32p, placing a total value on the company of £3.1m. Liner's shares stand at 31p.

Those Liner shareholders who take up the Tilling offer will be entitled to the Tilling final dividend. This is expected to be the maximum possible of 2.315p net, which would be payable in or about May 1978.

Accepting shareholders are also entitled to retain the Liner final dividend of 0.736Sp net for the year ending August 31, 1977, which is payable on February 18.

Mr. Christopher Bostock, a senior executive with Tilling who will become chairman of Liner, said yesterday that Liner would extend Tilling's own construction materials and services activities. "Liner is a group with a good reputation. And we were particularly attracted by the Giraffe site placing equipment which has possibilities outside the construction industry."

The present chairman, Mr. P. S. Field, will be appointed chief executive and the other executive directors will continue with their present responsibilities.

comment

Tilling's offer for Liner was not what some punters had been banking on. The shares had touched 38p on the announcement that talks were taking place with an unnamed party in mid-January. But with net assets at Liner of 37.8p including deferred tax or 24.9p excluding intangibles, the offer looks fair enough. Latest pre-tax profits for Liner were uninspiring—down from £702,000 to £626,000 on turnover of £7.92m. compared with £6.2m. And the company is faced with a depressed and competitive construction home market. Moreover high operational costs from an ambitious research and development programme and rising working capital needs together with a turnround in the group's financial position—from nil to net borrowings of £795,000 would have meant that the group faced another stagnant year. Now with Tilling muscle behind the group, together with access to its markets Liner should be able to develop its specialised markets, rother than loset market share as seemed likely.

Fig 56

10.0 CHEMICAL MIXING

The area of chemical mixing has been lightly touched upon in Section 6. In addition to the data collected on this project, a Market Survey was also commissioned by Liner, to obtain a basic idea of the companies development of their product range, both Liner manufactured and sold by the company under agency agreements.

In this Market Survey the concept of a Rotary mixer was floated. The limitations placed upon the survey were that the use of concrete should be neglected and the research concentrated upon the chemical industry.

In addition to this report, various members of the company have been involved in conferences and short courses.

The content of this section is the distillation and comments on these reports and courses.

10.1 MARKET REPORT

The market research was carried out by a firm of consultants, and was presented to the company in September, 1976. A summary of the most relevant parts are given below.

10.1.1 Introduction

In the introduction to this report it was pointed out that the plant designer is presented with a tremendous variety of equipment to choose from, and very little factual data on which to base his choices. One of the main reasons for this lack of data is because it is impossible to accurately predict the behaviour of all powder mixtures, and hence lay down rules for the selection of mixers for specific tasks. In general, designers and operators are aware of the existence of certain types of mixers, and will, on the basis of experience, narrow down the range of

mixers which should be seriously considered for a given application.

The process of mixing is not considered in isolation, this is because the final use to which the mixture is to be put has an important bearing upon the choice of mixing machine.

In the choice of machine the following criteria are usually considered:-

1. Time required for batch mixing or residence time in continuous operations.
2. Power with special reference to the power required to start the machine fully loaded from rest.
3. Labour required for filling, emptying and cleaning. Labour is the most expensive factor in a number of mixing processes, so batch size and through-put should be considered together to minimise labour requirement and size of mixing unit.
4. Discharging, complete discharge without labour intervention is desirable.
5. Ease of cleaning, this affects the labour content and the contamination of product by material from previous batches.
6. Wear, moving parts, bearings, etc., may be sensitive to wear by the mixture components with consequent contamination of the product.
7. Formation of dust, electrostatic charges and general safety should be considered.
8. Provision of ancillary services such as heating, cooling, vacuum and pressure.

However, the relative importance varies between industries, and between users within industries.

A selection of the introduction was given to the actual selection of mixers in practice. In this section the main points which were made are:-

1. The choice of machine is not based upon precise rules or scientific measurements, but upon the users application of common sense generalizations. With this very much in mind, potential users insist on running a number of trials with the equipment they consider purchasing.

   The trials may be carried out in a number of ways, but the following being the most typical:-

   a. At the mixer manufacturer's premises.

   b. At the potential purchaser's premises.

   c. At the premises of the current owner of the mixer.

   These trials may be for quite long periods (up to and over three months). Not only is it considered necessary to test the type of machine, but also the specific size required, as the problem of scaling the machine may give problems.

2. The choice of machine in the final analysis seems to be based upon two factors:-

   a. The broad category of mixer required.

   b. The manufacturers who are familiar to the purchaser.

10.1.2 Market Size

As was the case with the concrete industry, there appears to be no real indication of market size.

The only data available on the market split was found in a paper given in 1966 by Ashton et al in "Transactions of the Institute of Chemical Engineers", which gave the Table 54.

Unfortunately, no explanation of the source of this table or its meaning is given, but if it is assumed that the table is correct in relative terms it gives an interesting indication of the evenness of market split, it also gives an interesting comparison of the quarry sector against the mixing market as a whole.

SPLIT OF EXPENDITURE ON MIXERS	
INDUSTRY	ANNUAL COST OF MIXING PLANT (£ x 1000)
Chemical : Fertilizers	50
Detergent powders	50
Pigments	50
Pesticides	10
Pharmaceuticals	50
Plastics	40
Glass	20
Quarry, cement (incl. mixing silos)	200
Foodstuffs: Food for humans	n.a. (perhaps 20)
Tea	small
Food for animals	40
Tobacco	small

Table 54

That is $\frac{200}{530} \times 100$ 38% of the market is taken by the quarry sector.

The most up to date information indicates that mixers to the value of £14 million were sold in 1975, this figure excludes mixers for food and drink and for cement. This represents between 5600 and 6200 unit sales.

10.1.3 Industries/Users

The choice of areas to be considered was generally indicated by Liner and these areas were:-

1. Plastics (manufacturing and processing).
2. Pharmaceuticals.
3. Fertilizers.
4. Refractories.
5. Foundries.

1. Plastics

a. Manufacturing

The manufacturers of plastic materials use a wide range of mixing equipment, but a considerable amount of their mixing is not considered to be sophisticated, a large number of tumbler mixers are very often used, (used for mixing granules average size 2 mm). For mixing powders (250 - 100 μm) when a number of ingredients may be simultaneously mixed and where one ingredient may only represent 1% of the total final volume.

b. Processing

Plastic processors are increasingly finding that plastics manufacturers are able to supply granules and powders in the form required, hence they do not have a great need for mixing equipment.

2. Pharmaceuticals

In this industry a wide range of types and sizes of mixers are used but certain characteristics are required from them all.

a. They must be made from materials acceptable by British and European Pharmocaepia Standards (this includes metals and finishes).

b. All glands and joints must be totally leak-proof.

c. There must be a gap of several inches between bearings and glands and ideally, two glands between bearings and mixing vessels.

d. All parts of the vessel must be accessible for cleaning and visual inspection if required.

e. The vessel must be jacketed so that the temperature of the mix can be controlled.

f. A range of sizes must be available.

g. Variable speed mixing is essential.

h. Power consumption is not important, due to relatively expensive nature of ingredients.

In the manufacture of tablets and contents for capsules, moistening agents are nearly always used during the mixing process. The average particle size to be mixed is 100 μm, but may be as small as 10 μm.

In some mixing, operations are undertaken to ensure that particles of active substances are coated with a variety of coverings.

The "committee for the safety of drugs" requirements demand that the process used to provide test results is the same as that for the final volume production method. This would indicate a range of machines from laboratory size up to full production type.

3. Fertilizers

It would appear that in certain cases the needs are similar to that in the concrete industry, but a leaning towards continuous processes is also noted. Some of the applications are very crude, but it is noted that EEC standards may change these production methods.

In the manufacture of insecticides, the main mixing problem is to mix a number of trace elements into a China clay base, particularly important problems arise with regard to dust on discharge. Another problem is cleaning, as it is often necessary to follow a batch of weed killer with a selective insecticide.

4. Refractories

In this industry a two stage mixing system is quite common. That is, the finer ingredients (50 μm and less) are first mixed together, usually with a 3% moisture content. The coarser part of the mix is undertaken in Muller type mixers with the finer materials being added in this stage of mixing. Mixing times are in general quite long, up to 20 minutes.

The machines used in this industry are usually of high quality stainless steel.

5. Foundries

The preparation of sand is the main use of mixing equipment in this industry. In the more modern foundries, some more difficult mixes of sand are required, and these are carried out in paddle mixers. The range of particle size is from 2 mm to 0.05 mm. The mixing equipment is almost always supplied as an integral part of the moulding machinery.

Due to a large number of closures in this industry, a large amount of second-hand machinery is available.

10.1.4 Competition

There appears to be a large number of manufacturers and agents in the U.K. selling mixing equipment (approximately 76 and each company lists a large number of machines it is range).

The respondents to this survey did not indicate any interest in "yet another type of mixer", they seemed to be reasonably well satisfied with existing plant and not over-enthusiastic about new approaches.

Two interesting points were noted during this preliminary screening of Rotary mixers, these were:-

1. There was a very strong reaction that increase of speed of operation usually produced undesirable side effects.
2. Few users seemed to be interested in mixing free flowing dry granular materials.

The main impression formed was that as well as being a very competitive market to enter, it also calls for a heavy marketing expenditure in the broadest sense to back up a good product.

10.1.5 Market Opportunities

The following general comment was made at the beginning of this section. The toroidal mixer is a comparatively advanced technology product when set against traditional Liner products for the construction industry.

The markets with a sufficiently sophisticated state of technical knowledge and process activity to use the proposed new product are not likely to include many of the traditional Liner strong areas of influence. The lesser developed economies of Africa and Middle East are not likely to provide significant market potential for mixer products. The need is for more intermediate technology. Potential overseas markets of significance for toroidal mixers will be found essentially in the more highly developed economies of Western Europe, Eastern Europe, and North America.

10.1.6 Market Size

An estimate of export market sizes are given in the report and indicate that the largest potential sales are in West Germany, U.S.A., France, Japan, and the U.K. This estimate only includes the most highly developed countries. A total level one export market size of £160 millions of all types of mixer was estimated for 1975.

10.1.7 Conclusions

The advantages of Liner marketing Rotary mixers are:-

1. The mixer market is of reasonable size.
2. Some development work has already been done and Liner offer a range of basic mixers at present and the Rotary mixer would compliment the present product range.
3. Mixers used in a number of industries which are unfamiliar to Liner and would give the opportunity of working in new fields.
4. There could be a large overseas market potential.

The disadvantages of Liner marketing a Rotary mixer are:-

1. This is already a competitive market with a number of well-established companies in it.
2. Entry to the market would involve:-

   a. Considerable development work and experimentation alongside

potential customers with no guarantee of equipment orders being placed.

b. This would involve relatively high market entry costs.

3. Much equipment is specially adapted and designed for customers needs. Standardization of the product range could be difficult in a market where bespoke systems are required.

4. The apparent advantages of high speed mixing of the Rotary mixer could be perceived as a disadvantage. Speed is not necessarily of importance and it needs to be demonstrated that high speed mixing does not damage mix materials.

5. In some industries there appears to be a switch to the use of continuous process machinery which could mean a less rapid increase in demand for batch mixers.

6. The main overseas markets would be those in which Liner have little overseas marketing expertise (e.g. U.S.A., Japan, EEC).

10.2 CONFERENCES AND WORKSHOPS ATTENDED

10.2.1 Second European Conference on Mixing

This conference sponsored by the British Hydromechanics Research Association (BHRA). The conference covered a wide area of mixing and current research, although of general interest the contents were very specific and did not really progress the project, but indicated yet again the overall range of parameters which should be considered.

10.2.2 Mixing in the Process Industries

This post experience course at Bradford University gave a good grounding into chemical mixing and methods of obtaining the degree of mixedness.

10.2.3 Particle Workshop (Powder Handling Systems)

A course was held at Loughborough University on powder handling systems, it included a section on mixing and batching and indicated current thinking in this area.

A particular interesting part of the course was a paper entitled "A Systems Approach to In Plant Bulk Materials Handling" by C. Schofield and H.M. Sutton of Warren Spring Laboratory Survey. This paper indicates a systems approach to the choice of units used to handle powders, the main problems in plant design are considered to be in the ill-considered combinations or arrangements of acceptable plant. A list of criteria important to mixing was given and reproduced below.

Typical Criteria

Capital cost.

Operating cost.

Throughput.

Space requirements.

Flexibility.

Efficiency.

Quality control.

Automation.

Product damage or quality change.

Reliability.

Stability.

Maintenance costs.

Other handling requirements.

The paper then goes on to describe a systematic method of equipment selection, both on operational and cost grounds.

10.3 COMMENTS OF SECTION 10.1

There appears to be several areas of the report which need further attention. In Section 10.1.4 there are two comments on the Rotary mixer. The first was the increase of speed produced undesirable side effects. The high speed mixing action is in the truest sense not correct, and cannot be taken in isolation. In normal high speed mixing actions, a good deal of power is used as well as a high speed impellor. This is not the case in the Rotary machine, in fact, the mixing action appears to be relatively gentle.

It would appear from the second comment, that the consultants had limited the investigation of applications of the Rotary mixer to dry free flowing materials, again, this is obviously not correct, as the successful mixing of concrete is one of the most difficult operations in this mixing sphere. This would appear to invalidate most of this sections comments.

At 10.1.5 it is stated that the toroidal mixer is a comparatively advanced technology product when set against traditional Liner products. However, in the case of the Rotary mixer this is not true, since the machine is in fact simpler than the present mixing equipment. The comment may well be true of the associated batching equipment, but even this is open to some doubt as the mixer can be quite easily allied to present batching equipment.

The main point which this raises is that the machine was assumed to be unsuitable for mass sale to developing countries due to its complexity it can be seen that this is just not in fact true. Hence the overseas marketing opportunities do need re-assessing in light of the final pre-production testing.

10.4 CHEMICAL MIXING (COMPANY INVOLVEMENT)

The company is not quite as unitiated as the market report suggests, since Cumflow mixers are at present in use in the following chemical industries, Table

GLASS MANUFACTURERS

Pilkington Bros.	Sheet glass.
J.A. Jobling Ltd.	Pyrex glassware.
Beatson Clark.	Glass bottles.
Dale Brown Ltd.	Glass bottles.
Lemington Glassworks.	Lamp bulbs.
Hailwood & Ackroyd Ltd.	Speciality lamp bulbs.
National Glass Ltd.	
Wood Bros.	Coloured glassware.

REFRACTORY PRODUCTS

Plibrico Ltd.

Silbond Refractories.

Refractory Services.

J. Baines Ltd.

Gibbons (Dudley) Ltd.

Douglas Firebrick.

GRINDING WHEEL (Abrasives)

Phoenix Abrasives Ltd.

Universal Grinding Wheel Ltd.

Carborundum.

RESINOUS MIXES

Toffolo Jackson (Tiles).

Northern Polystone (Decorative Panels).

CHEMICALS

Proctor & Gamble Ltd.	Soap powders.
Albright & Wilson Ltd.	Soap powders.
Newall Insulation Ltd.	Asbestos.

FERTILIZERS

S.A.I. Ltd.

10.5 CONCLUSIONS

10.5.1 Company Involvement in Chemical Mixing

As can be seen the company does have connections with the chemical industry.

The methods of trial mixing are already practised by the company and have in fact resulted in specific orders.

The company has in the past made mixing equipment to cater for more rigorous standards, i.e. changes of pan and mixing star materials.

10.5.2 Rotary Mixing Machine

The original basic concept of the Rotary mixing machine given to the consultants appears to have been slightly misleading, as was the limitation of the machine to free flowing materials, this appears to have limited the possible areas of investigation.

The idea that the Rotary machine is an advanced technological product again is misleading, as the basic system represents a simpler concept than that at present used.

10.5.3 Systems Design

From the various conferences visited, it seems that a great deal more thought and research is being applied to the design of chemical handling and mixing systems. This would fit in well with the equipment required to obtain the maximum output from the Rotary machine. It has been previously stated the mixer also fits in well with present batching equipment.

11.0 ANALYSIS OF ALL DATA

The data collected so far in the project has been detailed in the following sections.

Section 7.0 Testing of Concrete Mixing Machines.

Section 8.0 Rotary Mixing Machine, Development and Mathematical Model.

Section 9.0 Market Survey.

Section 10.0 Chemical Mixing Survey.

Taking the main points from each section.

11.1 SECTION 7.0 TESTING OF CONCRETE MIXING MACHINES

11.1.1 Present Company Equipment

Certain modifications were indicated by the tests; these were on the pan type machine:-

a. Dust problem (Introduction of materials).

b. Addition of water (Slow and input pipe badly positioned).

c. Discharge of mix (Door sealing).

d. Scraper blades (Failure to operate).

e. Cleaning (Difficult).

11.1.2 Company Equipment Compared with Competition

In general the company equipment performed well when compared with the data available from other tests. In most cases, the three company mixers taking the top three places, but the consistently best machine was the newly developed Rotary machine.

11.1.3 Energy Consumed in Mixing

For the two machines tested the energy consumption was 0.17 kWh per 788 kg wet concrete for the Cumflow, and 0.076 kWh per 788 kg wet concrete for the Rotary machine. It should also be noted that the Cumflow has one of the lowest energy consumptions of the competitive mixers.

11.1.4 Rotary Mixing Machine

In the development and testing of the Rotary mixing machine, the following overall points were noted.

a. Quality of mix was high and was as good if not better than the other machines in the tests.

b. Energy consumed was less than the Cumflow by a factor of 2.27.

c. The indications are that a mix time of approximately 10 seconds per batch is sufficient, then the possible output from the prototype mixing machine could be 6.71 m^3/hour using a batch capacity of 91 kg and a batch cycle time of 21 seconds. This would indicate that this machine could equal the output of the Cumflow RP 550.

d. Compressive strength increases of up to 37.5% can be achieved against other Company mixers.

11.2 ROTARY MIXING MACHINE DEVELOPMENT AND MATHEMATICAL MODEL

In the development of this machine the following advantages over conventional machines are noted.

a. Simple construction.

b. Mixing method does not involve blades, hence reducing damage to machine and mix. This helps to give increased strength due to reduced aggregate damage.

c. Reduced power reduces the heating of the mix and again damage to the materials, a problem usually associated with "high speed" mixing.

d. Air seal will allow the simple introduction of steam or inert gas at the seal of the mixing action.

e. Size, the mixer is small relative to other mixers.

f. Cleaning simple due to absence of blades.

g. Heating may be carried out by heating the stator wall or by the addition of steam or hot air through the air seal. Cooling may be

achieved in a similar manner using a refrigeration system.

h. Access to the machine is simple.

i. Maintenance again is simple and less costly due to lack of moving and wearing parts.

j. The machine appears at this stage to be very versatile and mixes a wide range of viscosities as demonstrated by the tests on concrete.

k. The charging of the machine is simple due to the lack of blades and drive mechanism at the top of the machine.

At this stage the only disadvantage appears to be the generation of dust by the air seal, but this does not seem to be unacceptable in concrete, but may give rise to greater problems in the chemical industry.

The amount of the air used in the seal may be reduced by a more elaborate labyrinth seal system.

11.3 MARKET SURVEY (CONCRETE)

The following overall conclusions were reached from the market survey.

a. The company is losing its share of the mixer market.

b. Company products considered good but old fashioned.

c. A company policy to move into new and technically advanced areas.

d. Present range of pan mixers are good but difficult to modernize and bring into line with present health and safety requirements.

e. Probable upturn in the construction industry during the next three years.

f. Concrete is moving into new areas using various additives and almost without exception these are more difficult to mix by machines with stirring actions.

g. The quality control of concrete is likely to increase partly due to the high cost of cement and cost of correcting mistakes.

h. Future plants should be automatic, but should be low cost and reliable, not requiring skilled operators.

i. Maintenance must be minimal and preferably automatic.

j. Company sales methods should be updated and provide for a data return system.

k. Quality control of production should be increased, particularly on final dispatch.

The company are selling agents for advanced pipe making, handling and weighing equipment.

The company takeover by the Tilling Group gives access to facilities of a large group and not least to a source of finance for development.

11.4 CHEMICAL MARKETING

In the Market Report on the chemical industry, the following main points were noted:-

a. The main points considered when purchasing mixing machines are:-

1. Time to batch and mix.
2. Energy consumed.
3. Labour required.
4. Completeness of discharge.
5. Ease of cleaning.
6. Wear.
7. Formation of dust.
8. Provision of ancillary services.
9. Power used.

b. Need for trial mixing over extended periods.

c. Market Size approximately £14 million in 1975 and this represents approximately 5,600 to 6,200 machines.

Approximately 38% of the market is taken by the quarry sector.

d. Competition large numbers of competitors either manufactur or are agents.

e. Export large export market to all types of countries.

f. Cost. In order to enter this market, relatively high development costs would be incurred.

g. Adaptability. The final system must be adaptable.

h. Some industries switching to continuous mixing.

i. Typical requirements for purchase of powder handling equipment:-

Capital cost.

Operating cost.

Throughput.

Space requirements.

Flexibility.

Efficiency.

Quality control.

Automation.

Product damage or quality change.

Reliability.

Stability.

Maintenance costs.

j. Systematic system of design need for technical information.

k. Comments on market entry and applications not considered suitable due to incorrect concept of Rotary mixing machine and its potential.

l. Company does have some experience in the chemical mixing area.

11.5 ANALYSIS

From the data listed in the previous sections, the following points come forward:-

11.5.1 The company need a new modern mixing machine which will have a wide appeal in both the concrete and chemical mixing areas.

11.5.2 The present mixing equipment is not easy to modernize with regard to health and safety requirements.

11.5.3 Concrete and chemical mixing appears to be moving towards more common ground, partly brought about by legislation, i.e. Health and Safety, product liability, lack of skilled personnel, increased quality control.

11.5.4 The company is trying to move into more technically advanced fields and to broaden its horizons with agency agreements etc.

11.5.5 A move to reduced maintenance and lowering of running costs, together with calls for more automation and lower prime costs, indicates a high degree of after-sales backup.

11.5.6 There is a need to improve the selling and marketing system within the company.

11.5.7 The firm now has the financial backing of one of the top 30 companies in the U.K. This would indicate that funds would be available for future development.

11.5.8 The development of the Rotary mixing machine gives a definite improvement over the performance of the present concrete mixing machines, it also appears to answer almost all the basic requirements of both the concrete and chemical industries.

11.6 RECOMMENDATIONS FOR FUTURE OF PROJECT

The Rotary mixing machine appears to be the answer to the companies development over the next few years. It would appear to meet most of the requirements of the market, even in its prototype version and most of the problems have simple answers.

The only area which has not been investigated is that of feeding the mixing machine. This will obviously be a more critical problem than with the larger volume batch mixers, as the total cycle time for the mixer could be as low as 20 sec batch in batch out. In order to allow this investigation to be carried out it will be necessary to find from the data available a suitable size of mixing plant and batching equipment.

The next stage of the project investigates the possible batching, weighing and control options available.

12.0 BATCHING

12.1 PRESENT SYSTEM

The present methods of batching used by the company are typical of the industry in general. A typical installation is shown in Fig. 57. The system basically consists of overhead aggregate storage facilities, usually three bins, these bins are fed by a radial conveyor from a ground feed bin. The aggregate storage can be extended from the basic 50 tonnes to 250 tonnes (Fig. 58). The storage bins discharge into an aggregate weighing hopper, in this case the capacity is 250 kg, each part of the aggregate is discharged individually and is controlled via a simple slide door. When the first ingredient is weighed the system is tared to zero and the next ingredient is then added, and so on, until the final total requirement is reached. This is then discharged on to the batch conveyor and hence to the mixing machine.

The cement is stored in an overhead silo fed directly into its own weighing system, a screw feeder is usually used. The cement in then discharged into the mixer. The water is also weighed and again discharged directly into the mixer.

When all the ingredients are in the machine, they are mixed for the required time and then discharged into either some form of transport skip or belt conveyor or any other means of transport.

In the case of smaller plants, the aggregate storage may be in the form of ground storage compartments fed to a wall mounted batching system, the weighing system is usually of a mechanical type and the batching is either semi-automatic or manual. When the batch has been weighed the mix is transported to the mixer via loading hopper and again the cement and water are usually fed from a separate weighing system.

PLANT REF.	DIMENSIONS	
	A	B
P13	3.97	12.55
P20	3.87	12.55
P30	3.70	13.15
P40	3.70	13.15

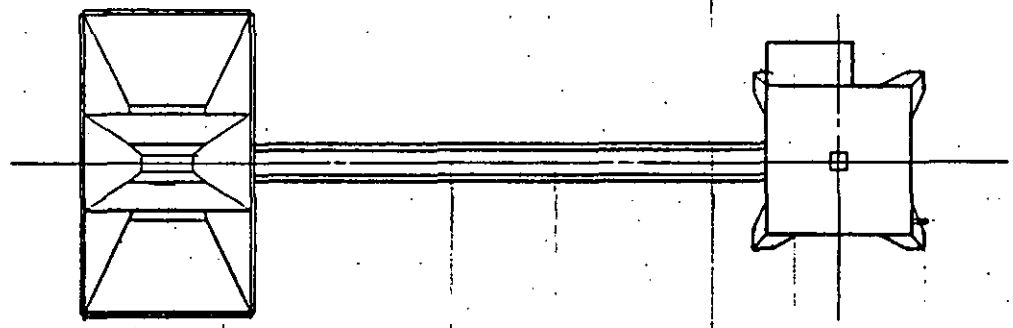

PLAN

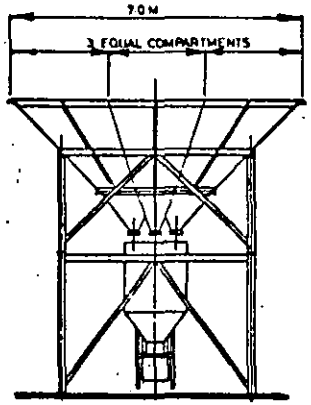

ELEVATION ON X

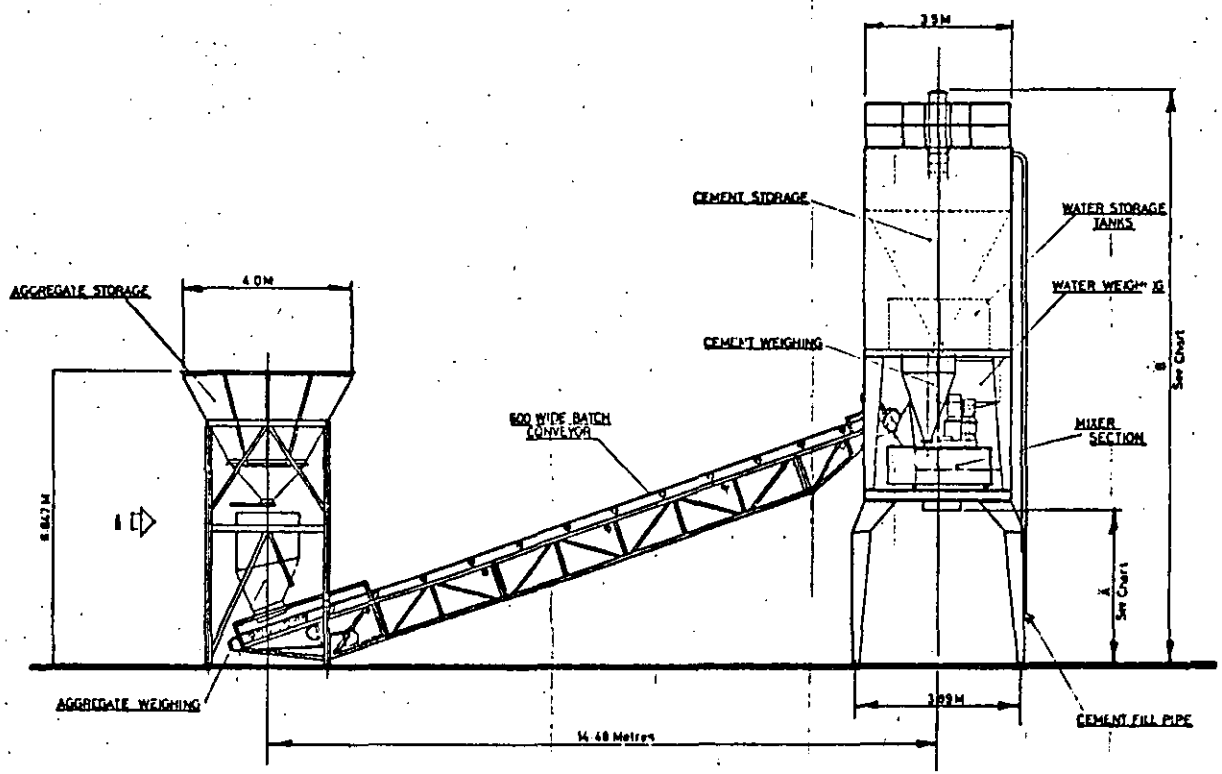

ELEVATION

Fig 57

LINER-CROKER LTD. RUNNINGS ROAD, CHELTENHAM, GLOS. Tel CHELT (0242) 26521	SELECTA BATCH RANGE—MIXER PLANT-STANDARD ARRANGEMENT FOR P13 TO P40 PLANTS	DRAWING No. P13—40

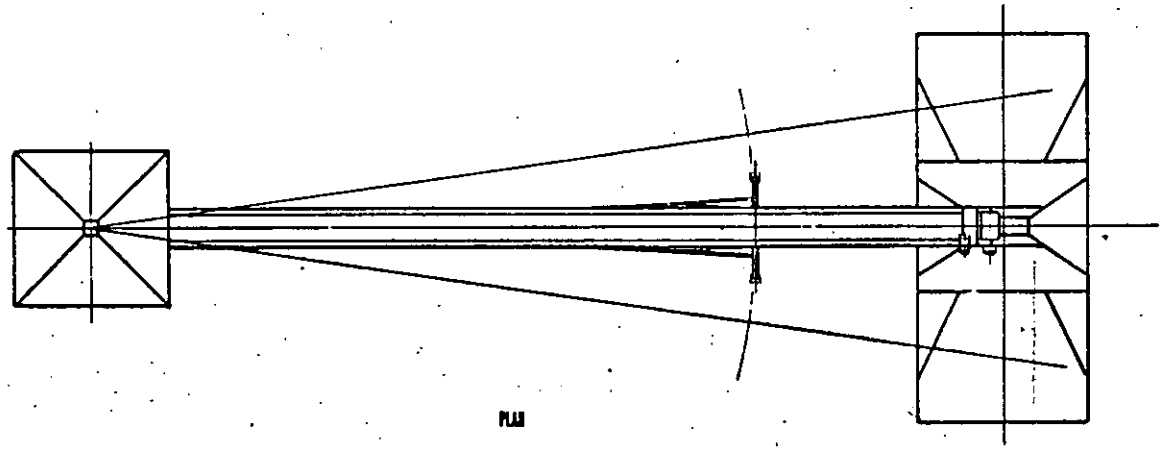

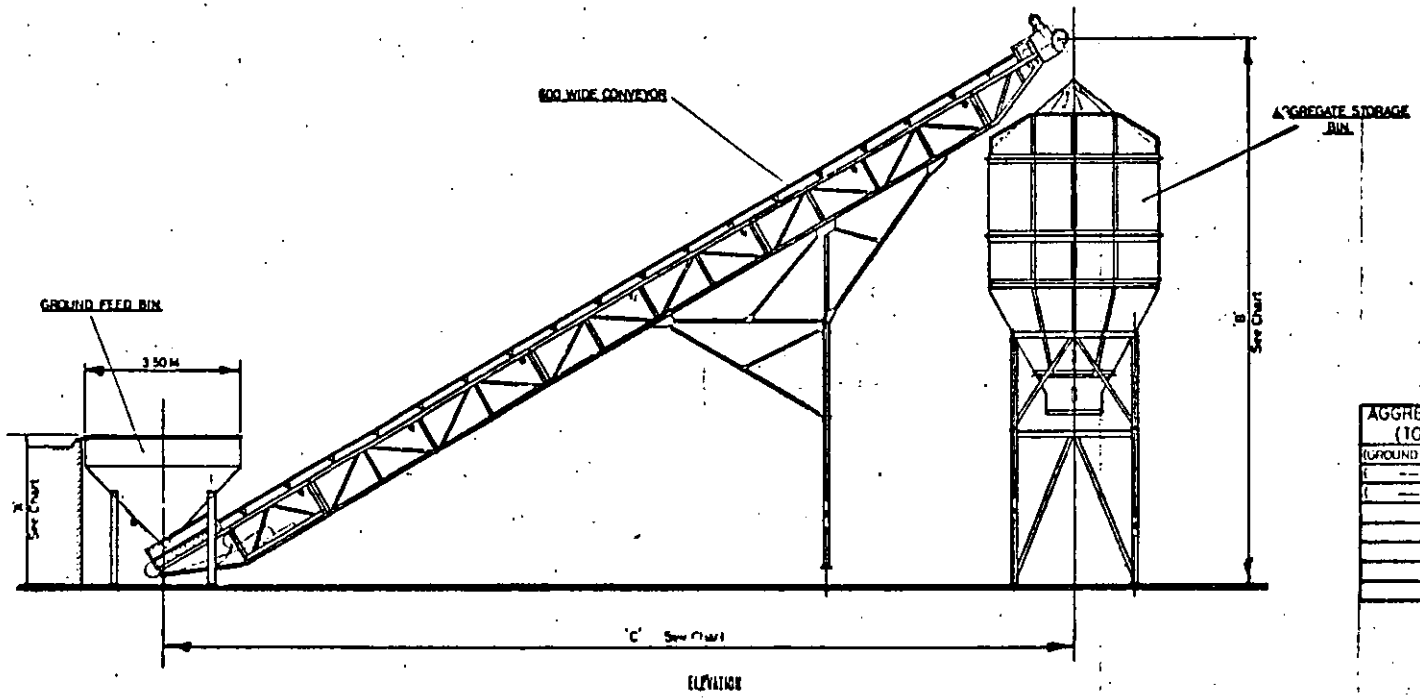

AGGREGATE BIN (TONNES)	DIMENSIONS A	B	C
(GROUND FEED BIN) 20	3150	-	-
(—·— 3.25	3454	-	-
(—·— 3.30	3760	-	-
50	-	8828	14705
100	-	9978	16750
150	-	10678	18349
200	-	11778	19908
250	-	12678	21467

Fig 58

LINER-CROKER LTD. RUNNINGS ROAD, CHELTENHAM, GLOS. Tel CHELT (0242) 26621	SELECTA BATCH RANGE — AGGREGATE FEED SYSTEM — RADIAL CONVEYOR	DRAWING No. SB-1

12.2 CAPACITY OF NEW SYSTEM

In order to determine the most marketable size of plant, both mixer and batching plant, an investigation into the available market data was carried out. This investigation is detailed in Appendix K.

The conclusions from this investigation were that a mixing system with an hourly output of 60 m^3/hr would cover approximately 88% of all mixers sold. This size of system is comparable with that shown in Fig. 57 and 58 which is designed to use an RP 1500 size mixer, which again gives an output of 60 m^3/hr when operating at 60 cycles/hour. It was also noted that a system with an output of 90 m^3/hr would almost cover the complete range of European concrete mixing equipment available at present.

For the purpose of this investigation the system to be considered would be that of a 60 m^3/hr output.

12.3 CALCULATION OF BASIC CAPACITIES OF SYSTEM

Initially the new system will be considered to run at a batch cycle time of 20 seconds as this is likely to be a minimum time achievable based on a 10 second mix time and a 2 - 4 second discharge giving a 6 second loading time.

12.4 AGGREGATE STORAGE

The main criteria is the ability to store sufficient aggregate to keep the mixing system working at full capacity without interruption, but as the present system is adequate to feed a similar size mixer the current bins and feed arrangements will be considered acceptable.

12.5 CEMENT STORAGE

The same comments as in 12.4 apply; the amount that is stored at the moment is considered adequate (30 tonnes).

12.6 WATER STORAGE

The present storage system would be considered adequate.

12.7 BATCHING TIMES

The major difference in the system is the time allowed to batch the mix ingredients. The time allowed for batching each mix will have to be less, this is because the amounts per batch for the Rotary mixer is 788 kg in 20 seconds, as against the Cumflow which is 2350 kg in 60 seconds. (Each for same amount of concrete mixed.) Hence the system will need to be of small capacity but will need to operate at a higher speed.

The batching times for each ingredient will be different, so each will be considered separately.

By working back from this data, a mixer capacity can be calculated.

$$\text{Cap} = \frac{60 \times 20}{60 \times 60} = 0.33 \text{ m}^3/\text{batch} = 775 \text{ kg/batch}$$

In order to calculate the maximum ingredients for each mix the quantities given in the new British Standard on concrete mix design will be used (55). If we consider two extreme mixes, i.e. C7P and C30P, these will give the maximum likely amounts of each constituent. Table 55 shows these values for a 775 kg mix.

MIX	CEMENT	FINE	COARSE	WATER*
C7P	64	240	447	24
C30P	180	285	285	25

All values in kg.

* Estimated figure based on test mixing.

Table 55

∴ the maximum amount of material to be fed is the 447 kg of coarse aggregate, but this will be made up of at least two parts, i.e. 10 mm and

20 mm and by using the ratio of 1 : 2 from the D of E mix method, the maximum amount is

$$= \frac{447}{3} \times 2 = 300 \text{ kg/batch}$$

Using the above information, a simple schematic diagram was drawn, Fig.59. This shows the possible bins and feed arrangements. If the discharge time for each bin is considered to be 5 seconds (door size designed to give this discharge rate), and using a batch time of 20 seconds, then the acceptable batching time will be 20 -5 = 15 seconds, but this must include the time to weigh and adjust.

12.7.1 Aggregate Batching Times

The data available from the company suggests that an aggregate feed rate of 29 kg/sec is normal for units with a 0.305 m square door, but reference to data from competitors brochures, a quantity of up to 83 kg/sec can be achieved.

Now by looking at the amounts required per batch, the possible batching times may be calculated.

Coarse Aggregate

For a maximum of 300 kg of coarse aggregate, the batch time using company data will be $\frac{300}{29} = 10.4$ seconds.

If competitive data is used, batch time will be $\frac{300}{83} = 3.6$ seconds

As the maximum batch time is equal to 15 seconds, both feed rates are acceptable.

Fine Aggregate

For a maximum of 285 kg of fine aggregate per batch, the batch time using company data will be $\frac{285}{29} = 9.8$ seconds

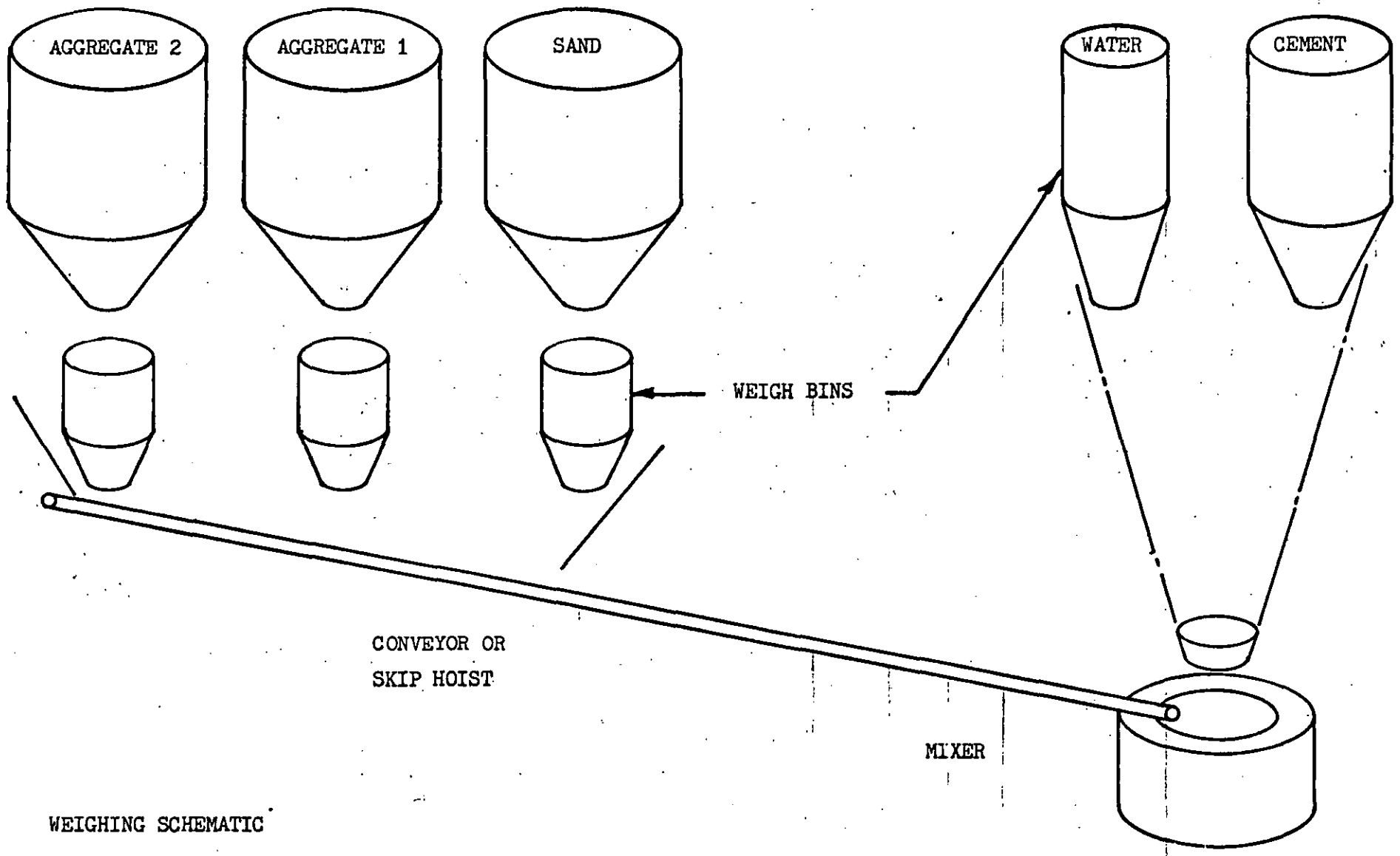

WEIGHING SCHEMATIC

Fig 59

If competitive data is used (67 kg/sec) batch time will be $\frac{285}{67} = 4.25$ sec.

Again, as the maximum batch time is equal to 15 seconds, both feed rates are acceptable.

12.7.3 Cement

The batching of the cement is usually carried out using a screw feeder. No data is available from the company, but again, the competitive data suggests a feed rate of 22.25 kg/sec. The maximum amount of cement is 180 kg so the batch time will be $\frac{180}{22.25} = 8$ seconds.

As the maximum batch time is again equal to 15 seconds, this feed rate is acceptable.

12.7.4 Water

The amounts of water required will vary with the workability of the mix required, but a basic mix figure of 25 litres for a very dry mix to a figure of 90 litres for a more fluid mix. Again, no flow rates are available from the company, but in the competitive data, a figure of 9.48 litres/second. Therefore the maximum batch time will be $\frac{90}{9.48} = 9.5$ seconds.

As the maximum batch time is 15 seconds, this will be considered acceptable.

GENERAL

It should be noted that the above figures do not include any allowance for two stage feeding and weigh stabilization, hence an allowance of 75% should be added to take this into account.

In considering the weigh times, the aggregates will be critical if a single weigh bin is used. Time = Coarse 20 + Coarse 10 + Fine.

$= 3.6 \times 1.75 + 1.8 \times 1.75 + 4.25 \times 1.75 = 17$ seconds.

As the maximum batch time is 15 seconds, this system is not acceptable.

12.8 WEIGHING SYSTEM

The above calculations indicate that a single bin weighing system will not give sufficiently low batching times. This then indicates the inclusion of a separate weigh bin for each ingredient, this would obviously increase the cost and to a certain extent, the complexity of the system.

The above is true if the maximum use of the mixer is to be obtained but it is also considered that a more refined standard system would enable an improved output without the additional cost. The improvement would be possible due to the design criteria of most present batching systems being the mixing time and not that of the batching time.

The basic schematic drawing Fig. 59, which already incorporates the idea of a single ingredient weighing system has been used to obtain quotations for the overall mixing batching control system.

12.9 FEED SYSTEMS

In considering the overall problem of accurate feeding from Section 12.7 it is seen that the normal gravity feed system would appear to be inadequate, but in considering the accuracy necessary to give the required standard of mix it is considered that in most cases a two stage feed system will be required.

The two stage feed system consists of a coarse and fine feed gate which fully opens on the coarse feed for say 90% of the batch, and then accurately tops up the batch using the fine feed. This will reduce the weighing time and also increase the accuracy. These systems only apply to the aggregate part of the weighing.

In the case of cohesive parts of the mix, some types of fine aggregate and wet sand, this system may not have sufficient reliability due to the

material being left in the bins. An answer to this problem is the vibratory feeder. These feeders work on the principle that material, if vibrated in the correct way, will move along the trough, these feeders are available in various sizes from very small amounts to 1000 tonnes/hr or more.

The feeders have the added advantage that when attached to the bottom of a hopper, they promote the flow of material from that bin. An additional advantage in the case of the company, is the fact that they are agents for vibratory feeds made by a Danish company. One model of the feeder is designed for attachment to the bottom of storage bins.

These feeders when fitted with a control device, can be used to accurately meter the output and can be used as a two stage or many stage feeding system.

12.10 CONTROL SYSTEMS

In the investigation of the available batching equipment, it soon became apparent that several standard off the shelf systems were available which included feeders, load cells, controllers and bins. As may be expected, some companies offered complete packages of equipment, but as Liner are at present in the business of producing concrete batching plants, the main area of interest would not be in the areas of bins and feeders, but in the use of the control systems alone.

At present the type of weighing and control equipment is either specified by the customer or dictated by other technical or commercial parameters. In considering the new type of equipment and its speed of operation and general complexity, it is thought that a single supplier of all the equipment would initially at any rate be a wise move. This would give the company chosen some incentive to help with the development stages and supply the correct combination of equipment.

In order to enable a comparative cost estimation to be made of each type of control system, the systems to be considered must be defined. A need for a totally automatic plant was indicated by the marketing. A computer controlled system was an obvious choice, after a good deal of consideration it was decided that a number of levels of performance would be required. These are listed below.

1. Complete computer control.
2. Limited computer control.
3. Automatic control.
4. Limited automatic control.
5. Manual control.

12.10.1 Complete Computer Control

This system would give computer control of all functions. These would include:

a. Control of weighing and batching equipment.
b. Control of mixing machine, including washout, etc.
c. Quality control of mix, including up date from cube test results.
d. Quality control of wet concrete.
   (a) Water content.
   (b) Slump.
e. Production of content certificate.
f. Production invoices and accounting.
g. Stock control of materials.
h. Ordering when required of new materials.
i. Automatic weight checking systems.
j. Total quality control program.

The only input to the system would be the type of mix required and the quantity and customer code; the plant would carry out the batching,

mixing, and invoicing and also give a guaranteed bill of quality.

12.10.2 Limited Computer Control

The system could include most of the machine control features but would be somewhat limited on the production and stock control functions. The main limitation would be the amount of data storage available.

12.10.3 Automatic Control

This system would allow the automatic selection of a limited number of mixes, but would include the option of card programmed mixes, in this case, the control system would be able to read the required mix from a punched card.

This system would not be dissimilar to that at present in use. It would not use relay logic but would again use microprocessors, to reduce cost and to give a more flexible system.

12.10.4 Limited Automatic Control

In this system the automatic control would be limited to the setting of one mix on hand set dials, but the batching system would still be fully automatic.

12.10.5 Manual Control

This system would be similar to that in general use in the present batching systems and would only be of limited use with the Rotary machine due to its speed of operation.

12.10.6 Conclusions

From the above levels of control a single basic system to control the batching and mixer cycle would be the sensible minimum amount of control on this type of mixing system. This system could then be supplemented with the other systems as required.

12.10.7 Options Available

With the above type of control system in mind, an investigation of the equipment available was carried out and the following points noted.

12.10.7.1 Standard Equipment Available

The major equipment manufacturers provide a good range of equipment which are specifically orientated to the chemical and processing industries. A typical system is shown in Fig. 60, made by Defiant Weighing Ltd., it is typical of most systems.

12.10.7.2 Programmable Logic Controllers

In the course of the investigation, several companies which market a programmable logic controller were contacted. This equipment is built around standard programmable modules which perform various operations. It would appear to be very versatile and would be programmable to the requirements of the particular installation.

These units can be supplied as simple controllers, or with a computer system to monitor various control functions, and to modify these functions when they deviate from a programmed norm.

The main problem with this equipment is that the manufacturers do not only use it for this type of process control and hence do not supply complete systems. The load cells are usually purchased separately, which may indicate additional matching problems, but all the processor controller manufacturers offer a full technical support function.

12.10.8 Cost of Control Equipment

Each of the control equipment manufacturers was given the same basic information and asked to quote for the installation using their equipment. The information from this exercise is used in Section 14 to cost the whole system.

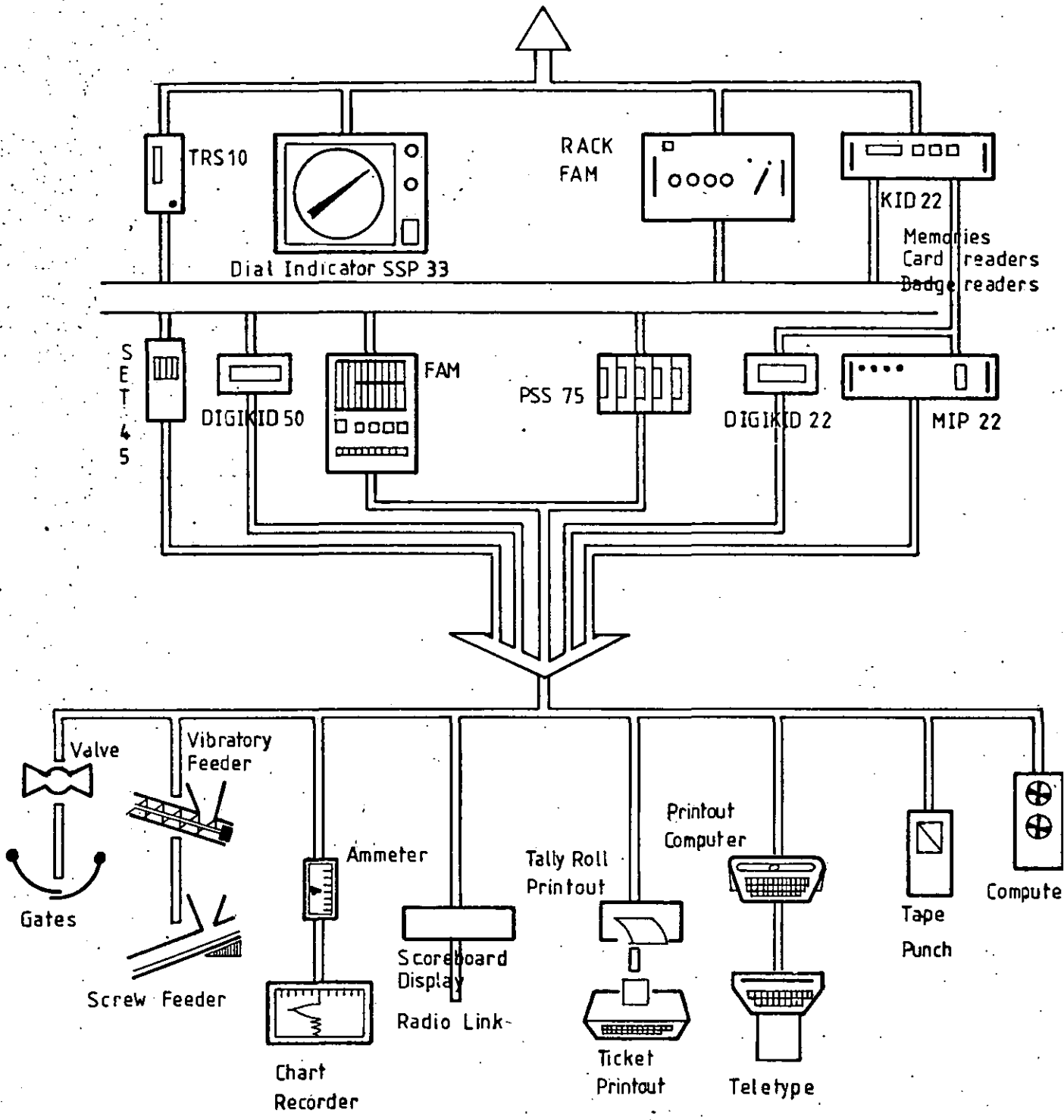

FAM	=	Function module
KID 22	=	Digital indicator
TRS	=	Transmitting load cell
SET	=	Setting point controller
DIG KID	=	Digital indicator
PPS	=	Sequence controller
MIP	=	Programmable printout controller

Fig. 60

12.11 SUMMARY OF INVESTIGATION INTO BATCHING SYSTEMS

The investigation into the feasibility of providing a batching system which is compatible with the proposed time cycle of the Rotary mixing machine has given rise to the following points.

1. The weighing equipment presently available is compatible with the time cycles required by the new mixing machine, but each ingredient would have to be provided with an individual weighing system and not as at present, a combined system.
2. The feeding from storage hoppers would also appear to be adequate, but again, the gate control systems may have to be developed to cope with the degree of accuracy required.
3. The control of the batching operation needs to be more precise than most of those presently in the field, and an investigation into the available microprocessors.
4. The various levels of control indicated by the Market Survey would seem to be available with the present systems, but it is considered that over the development time of the plant, a further developed and lower priced system may become available.

12.12 CONCLUSIONS

It would seem that using the present batching and control equipment the time cycle of the machine could be achieved, but by using the new technology of microelectronics a very accurate and adaptable system could be developed. It would also seem likely that considered the reducing price of microprocessors, a lower cost system would be possible.

Finally, it would seem that not only is the batching system available to feed the Rotary mixer, but this could well be more accurate, more versatile and cost less than present systems.

13.0 DESIGN OF A MIXING SYSTEM

With the favourable conclusions from the investigation into batching systems, the design of the whole mixing system to fulfil the requirements of the market now becomes a viable proposition.

13.1 THE PRODUCT SPECIFICATION

This document has been used to logically present the available information and also to highlight the areas of unknown information.

The specification is an interactive document which is modified as and when the detailed information on a specific area becomes available. In theory it is never a finalized document as it will also change with the market conditions and may, as such, be used as a constant check on product viability. At a suitable time the specification must be put into a state of suspended animation to allow the product to be made, after this time it should be amended using the changed market information until the degree of change indicates a modified product or a new concept is required.

13.1.1 Mixing System Specification

The specification for the mixing system, as detailed in Appendix J, is at the embryonic stage. The information needed to complete some parts is not available, but is covered by the use of a general statement and indicates the direction of future investigations.

The format has been developed to show the overall system and its individual parts.

The initial part details the common areas such as output, size, modular design, safety, finish etc. These are grouped under the heading of mixer and batching systems, the remainder deals with the individual components, i.e. mixer and batching equipment. Of these areas the most detailed is that of the mixing machine, as this is where the maximum knowledge is available.

The overall philosophy of the design is to be one of simplicity and ease of operation. The machine should be easy to maintain and clean, and easy to adapt to new and varied uses. This indicates that the modules should be self-contained and easy to maintain and remove. The basic simplicity of the machine helps in maintaining this idea, and allows the various wearing items to be contained in a simple to remove section.

13.2 DESIGN OF MIXER

The design of the mixer is basically seen as consisting of three modules and the assembly of these modules.

1. Power and base module.
2. Mixer module.
3. Interface module.
4. Assembly of modules.

Each of these sections is dealt with in detail below, see Drg. 75.W. 0011.

NOTE: All item numbers refer to this drawing.

13.2.1 Design of Power and Base Module (10)

The base module is to be the backbone of the machine, it not only provides the power, but also is the main load carrying part of the system.

The loads are applied to the base, as shown in Fig. 61, and are derived from the rotor (13) and stator (12). The rotor loads comprise down loads due to the weight of the mix and torsion loads due to the change in velocity of the rotor, also applied will be out of balance loads from the non-uniform distribution of the mix on the rotor. The loads due to the weight of mix are known, and the loads due to inbalance may be estimated, but at this time no data is available on the variability of the torque load.

To take this into account, the base ring of the pre-production machine has been constructed to be above the required strength, but only load and deflection tests can confirm this, and hence allow reductions in size. It should be noted that the loads from the gearbox are transmitted directly into the base mounting ring, hence reducing the need for additional structure to carry these loads.

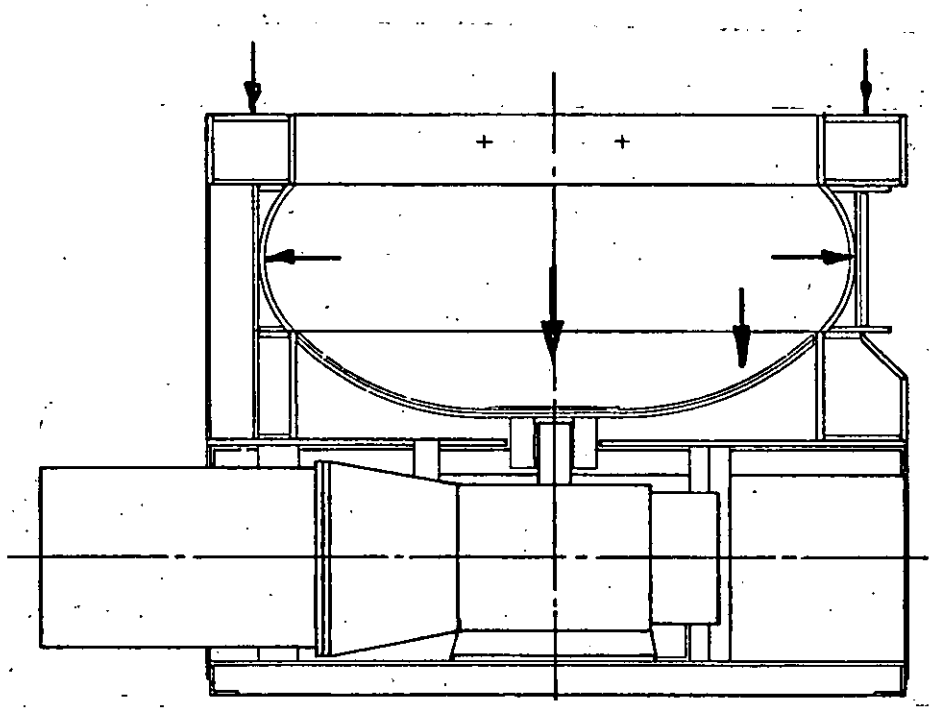

Fig. 61

The remaining loads are from the stator; these are the weight of the stator and interface modules combined with the allowable loads from the direct mounted batching structure. In addition, the module will have to accept the results of the out of balance forces applied to the stator from the mix, but it is considered that these will be relatively small. The loads have been taken directly on to the outer mounting ring, and hence applied directly to the external mounting structure, thus reducing the base weight. The paths taken by the loads are shown in Fig. 62.

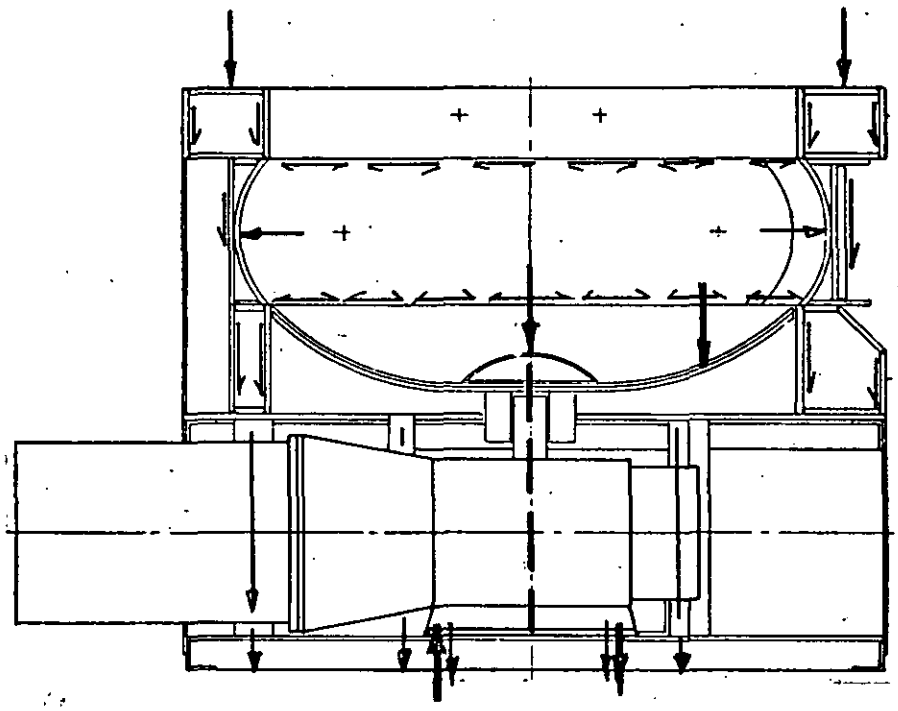

Fig. 62

The prototype rotor was driven at a speed of 18.33 rad/sec, this gave a rotor tip speed of 6.05 m/s. If this tip speed is maintained constant, the rotor speeds for the 1 m and 2 m diameter machines would be 128 rpm and 61 rpm respectively, but as the minimum speed available from a standard electric motor is 750 rpm the use of a speed reduction system is necessary. In the case of the prototype machine, an infinitely variable speed reduction system was used, but in the case of the pre-production machines this has not been included in the basic design, this is mainly to allow an accurate estimate of cost to be calculated and to allow the machines to be run under production conditions. It is envisaged that at the early stages of testing, the pre-production machines, it will be necessary to ascertain that the speeds used are the optimum. The incorporation of a variable speed unit in the drive chain, between the

gearbox and motor is feasible and would allow the variation required to confirm the concrete quality allied to rotor speed.

The method chosen is that of a simple reduction gearbox (2), this has the advantage that these boxes are well tried and tested and will give the speed reductions required together with the required power handling. The gearboxes are available with integral motor mounts and will accept the spectrum of loading expected from the rotor. The gearboxes are mass produced and of good value when compared with other types of drive.

The method of motor mounting shown is chosen to give the minimum height of the overall unit. The electric motor used (1) is to be comparable with the power capacities of the gearbox, and is hence unlikely to cause overloads and subsequent failure.

It should be noted that the gearbox concept is not necessarily the lowest in cost, but is considered to give the most suitable answer to the company's manufacturing facilities, and to give the most reliable product at the initial stage of production.

The air supply for the seal may be supplied by shop air, but this is expensive. An alternative is to use an electrically driven centrifugal blower (3), to produce the required volume and pressure of air for the seal. The unit is compact and will fit in the confines of the mounting base. The input air is taken from within the base and provides a cooling air flow for both the motor and gearbox units, the air will be taken in around the motor casing and drawn across the gearbox and via a filter into the air seal blower.

The base module is topped by a cover, which is removable to allow removal of the gearbox. All the remaining parts in the base may be removed in situ by removing the lower covers. The initial idea of removing the gearbox by sliding it out from between the covers was not used, due to the

need to remove the rotor, and hence disassemble the mixer section giving little advantage. In the case of the 2.0 m mixer, a small hoist or crane will be required to remove the gearbox, but it is considered that this type of equipment will be available. The frequency with which the gearbox will need to be removed should be low, and hence it is not considered that this would be a great disadvantage.

The base also houses the inlets and distribution for the door operating system.

The prime mover used is a flange mounted drip proof electric motor (1). The replacement of this is again simple, and may be accomplished without the need to disassemble the mixing section.

The air seal chamber and the rotor shaft need to be sealed against the excessive loss of air. A small loss is, however, likely to be acceptable. Three types of seal have been considered, these are one a type of "V" ring seal which would be mounted on the rotor shaft and would rub on the lower side of the base seal plate, Fig. 63.

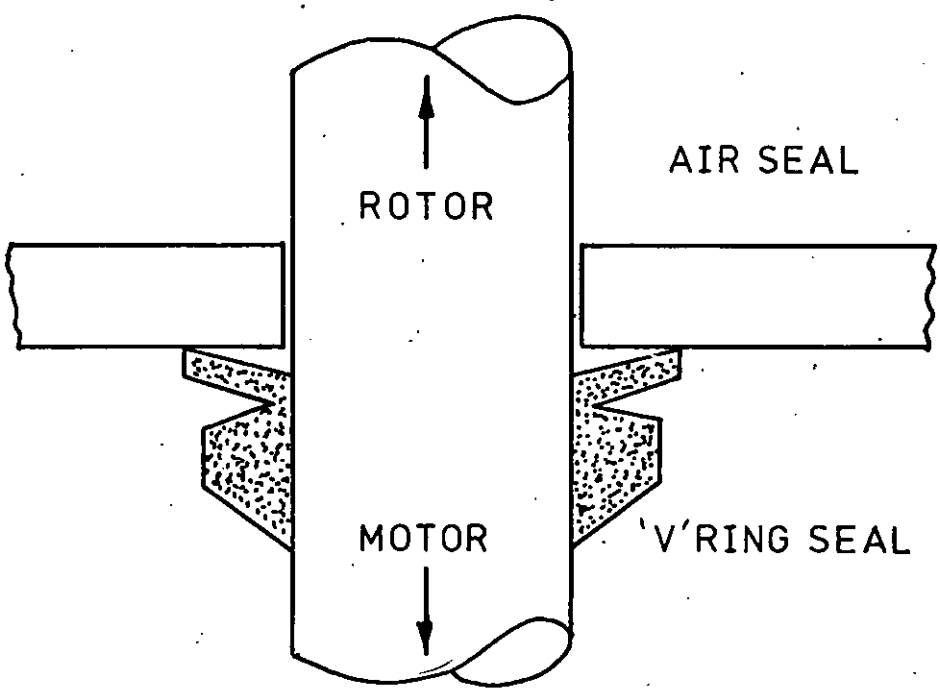

Fig. 63

This arrangement has the advantage that if the air passage between the rotor and stator was blocked, the seal would be pushed away from the seal plate and would hence allow the pressure to escape. The major problem with this type of seal is that if water and dust do enter the plenum chamber, (this will depend on the effectiveness of the mix air seal), and hence on to the seal faces, this will cause unacceptably high wear rates.

The second type of seal is that using a brush, the sealing efficiency may be varied by the length of the brush used and has the added advantage that it may be replaced without removal of the rotor. The pre-production machines have been initially designed to use the "V" ring, but it is thought that evaluation of the brush seal should also be carried out as this may prove to be less costly and more durable answer.

The third method is to use a non-contact air seal, similar to that used between the rotor and stator, the provision of labyrinth would increase the effectiveness of the sealing action.

It is considered that each alternative should be investigated and the final answer will depend upon the effectiveness of the rotor/stator seal.

13.2.2 Design of Mixer Module

The second part of the mixer is that of the mixing module which comprises a spacer (11), stator and door assembly (12) and the rotor (13).

The spacer fits directly on to the base module and has a dual function. It firstly positions the stator at the correct height relative to the rotor and secondly, houses the door activating ram and provides a simple discharge chute.

The stator fits on to the top of the spacer and forms the main section of the mixer, the discharge door is an integral portion of the stator, and when opened, removes a part of the stator to allow the mix to discharge.

When this happens, a certain amount of the mix is left on the door sealing faces, the action of the door closing wipes all the faces of the seal and hence ensures complete closure of the door, which prevents leakage of the next mix. The force required to give this cleaning action is not known, but the force available from the air cylinder (4) together with the inertia of the door is considered to be adequate.

The wearing faces of the stator have been made from mild steel. The long term wearing properties of this material are not known, but the prototype machine with case iron faces showed little wear after the mixing tests, hence the use of mild steel would seem to be a suitable starting point in an on going program of material evaluation.

The splitter bar is to be fitted to the door, and comprises a simple mild steel strip. In the development phase this may be changed to a more profiled shape, which would induce a more active mixing action.

The final part of the mixing section is the rotor (13). This is mounted directly on the gearbox output spindle. The height of the rotor outer edge relative to the lower face of the stator may be adjusted by the insertion or removal of spacers in the rotor mounting boss. It is thought that in the production machine a more simple method of adjustment, probably from above, will be more appropriate, alternatively, by careful production, the need for adjustment may be removed.

The upper working face of the rotor is covered in Linatex to increase the "μ" value. The outer edge of the disc is capped with a steel edge member to prevent the erosion of the bond between the Linatex and rotor experienced on the prototype machine.

The life of the Linatex is likely to be shorter than that of the stator, in order to minimize the down time, it is conceivable that the machine would be supplied with a spare rotor. It is, however, hoped that the Linatex will have a sufficiently long life to make the above unnecessary.

This module is completed by the fitting of covers around the mixing section (15).

13.2.3 Design of Interface Module

The interface module (14) is intended as the name suggests, to connect the mixer to the batching system.

The overall module may vary in detail, but will in essence contain the same items, these being:

a. Ring.

b. Sliding ring.

c. Interface section.

a. The top ring of the mixer forms the top portion of the clamping system for the mixer.

b. The sliding ring is used to allow the mixer to be disassembled without the need to disturb the batching plant. It also isolates the mixer vibration from directly affecting the weighing equipment. The sliding joint may either be in the form of a close fitting ring, or a brush type seal.

c. The interface section will provide the mounting face for the lower end of the batching system and may vary depending upon the application, but with careful design of the various batching systems, the number of different types would be limited.

13.2.4 Assembly of Modules

The three modules have been so far considered as separate entities, but the method of assembly will have a prime importance on the maintenance of the mixer. The method of assembly used is to first space the base and interface modules using three of the four bars (18), the space between the base and interface module will be greater than the overall height of the mixer section. The spacer is then introduced on to the top of the base

followed by the insertion of the rotor. The final portion, that of the stator, is then added. These items are then correctly positioned and the fourth bar added (18). When the stator and rotor are correctly aligned and the door attached to the operating ram (4), the four tie bolts will be tightened down to lock the mixer together, the assembly is finally completed by the addition of the intermediate covers (15). This assembly system is considered to be both simple and versatile, by the addition of four extra holes in the base and interface base ring, the discharge chute may be positioned anywhere around the mixer circumference. Access to the inside of the machine should be either through the door aperture or through the top covers.

13.3 MAINTENANCE APPRAISAL

One of the key areas of importance in the success of the mixer, is that of ease of maintenance. In the next section a review of the maintenance functions needed are reviewed.

The required maintenance may be broken down into three main areas:-

1. Daily maintenance.
2. Long term maintenance.
3. Breakdown maintenance.

13.3.1 Daily maintenance

The maintenance required from day to day should be small, and preferably none. It is accepted that the mixer will need to be cleaned internally at the end of the mixing period, but it is foreseen that this would be carried out automatically by the addition of water and course aggregate, this would be discharged at the end of the "mixer clean" cycle and would hence clean the discharge chute and mix-holding hopper if used.

The only additional daily check would be on the condition of the Linatex covering on the rotor.

13.3.2 Long Term Maintenance

The longer term maintenance at 14 to 28 days, would involve the checking of oil levels in the gearbox and to clean and replace the blower air filters. This would necessitate the removal of the lower covers. It is possible that the need to check these items could be removed by the use of a low level oil wearning light on the gearbox and a low seal pressure warning light on the blower. The low air pressure warning system could also be used as an inter-lock system, to prevent the mixing being used without the required air seal pressure.

The remaining items of long term maintenance would be to check the wear on the stator, splitter bar and disc, and to check the door for operation and lubrication. The operation of the door would again be constantly checked by the interlock system between the mixer and batching system.

13.3.3 Breakdown Maintenance

The main areas which may be considered under this heading are:-

1. Failure of prime mover.
2. Failure of gear box.
3. Failure of rotor lining material.
4. Failure of stator due to wear.
5. Failure of door.

With the failure of Item 1, the replacement may be made by simply removing the lower covers, unbolting the motor and effecting a replacement.

If Items 2, 3 and 4 fail, this requires the removal of the mixing section and the damaged item replaced or repaired. The most critical item to replace is that of the gearbox, and it is estimated that this

should take approximately four hours, but the replacement of the stator or rotor should be completed in less than one hour, this is assuming that a replacement stator or rotor is available.

In the case of a door failure, the damage is likely to be limited to either wear on the hinges or sealing faces, or a failure of the pneumatic ram, it is estimated that this could be repaired in less than 45 minutes.

13.4 DESIGN OF BATCHING SYSTEM

In the design of a batching system to be compatible with the Rotary mixer, the following criteria are important:-

1. The system should be compatible with as much of the present equipment made by the company as possible, hence minimizing the development needed.
2. The equipment should make the maximum use of the potential of the Rotary mixer.
3. The new parts of the system should be, where possible compatible with the normal production capabilities of the company.

13.4.1 Types of System

The company at present manufactures a wide range of modular batching equipment. This falls into two distinct types of batching plant, the first uses a radial boom scraper to heap the aggregates against a wall which is equipped with pneumatically operated discharge gates, these weigh into a single hopper. This hopper is then inched up a track and discharged into the mixer. The second type is that using the large overhead aggregate storage, these bins are replenished by a radial feed conveyor, the aggregates are discharged into a single weigh bin and then transported to the mixer via a belt conveyor (Fig. 57).

At this stage it was considered that a preliminary scheme should be developed for each system, hence allowing a comparable costing to be made.

Details of these schemes are given in the next chapters, and are divided into the following parts:-

a. Design of Batching System Using Radial Boom Scraper.

b. Design of Batching System Using Overhead Storage.

c. Additional Batching Modules.

d. Design of Control System.

e. Alternative Options.

13.4.2 Design of a Batching System Using a Radial Boom Scraper

In the design of this system as much of the specification as possible has been incorporated. The system is designed around the maximum output small size mixer that is giving an output of 24 m^3/hour of mixed concrete.

The scheme is shown in detail on drawing 75.W.0050 sheets 1 to 3. Sheet 1 shows the overall plant layout. The design of each section is detailed below.

13.4.2.1 Overall Concept

The basic concept with this equipment is to provide a low profile batching system which is transportable yet gives the capability to store large amounts of aggregates. The system is usually operated by one man and may be used on large sites or as a part of a concrete product factory. In the case of this design, the plant may be operated by one man spending only a small amount of time keeping the aggregates heaped against the discharge gates, the remainder of the operation may be carried out automatically.

The batching and mixing equipment is housed in a clad building, this idea is used for several reasons, the main ones being visual impact and the need to meet the various aspects of the Health and Safety at Work Acts. A standard portable cement silo is used, again keeping the need for new equipment to a minimum.

13.4.2.2 Radial Scraper and Aggregate Feed

The radial boom scraper is a standard part of Liner equipment and does not need to be modified. A three or four compartment bulkhead unit with pneumatically operated quadrant-type discharge is fed by a cab mounted driver operated radial boom scraper, this is equiped with four position joy stick controls. The bucket and slew ring are electrically driven and give scraper capacities from 25 to 90 m^3/hour.

13.4.2.3 Aggregate Weighing

With the Rotary mixing machine a much faster weighing cycle is needed. 20 seconds per batch is considered a minimum, to reduce this time a multi bin weighing system is used. This system allows each aggregate to be weighed separately, hence reducing the overall weighing time. The system envisaged is shown in Section AA and CC on 75.W.0050. The normal aggregate gates have been retained, but instead of weighing into a single skip, an intermediate weighing stage has been added. This stage comprises of three hoppers, each mounted on a single load cell, the hopper size has been designed to cope with the largest amount of aggregate required. The speed of feeding and the required degree of accuracy may require that a two-stage feed gate be fitted, but at this stage it is assumed that the original gates will be adequate.

On completion of the weighing operation and assuming the skip is in place, indicated by the control interlock system, the gates on the bottom of the weigh bins will open and discharge the batch into the skip. The doors will close when the bins are empty and the weigh cycle will again be initiated. The additional weigh hoppers will fit under the existing discharge gates, since they are smaller than the normal bins.

13.4.2.4 Skip Hoist

The skip is the only part of the structure of the hoist which will need alteration, the runway will be very similar to that at present in use,

as will the discharge system. The speed of the skip will need to be increased, but after a review of the other skip hoists, available speeds of up to 0.8 m/sec can be achieved. This will put the total cycle within the 20 second allowed.

13.4.2.5 Cement Weighing

The cement weigh hopper is again mounted on a single load cell and is fed by a standard screw feeder. (Section D - D 75.W.0050.) When the weighing is complete, the cement will be discharged into the mixer through a simple slide gate, which is pneumatically operated. This again is standard company equipment.

13.4.2.6 Water Weighing

The water is weighed in a tank supported on a single load cell. The water is fed from a water storage tank mounted in the unit roof. The input and output to the tank is controlled by solenoid valves, the final introduction of the water into the mixer is via a central pipe discharging on to the rotor spinner. (Section D - D 75.W.0050.)

13.4.2.7 Mixer

The mixer is mounted directly on the unit floor. The discharge will be either via a holding hopper, or directly into waiting transport.

13.4.2.8 Interface Module

The interface module forms the top of the mixer and provides the mounting flanges for the lower discharge doors of the water and cement hoppers. A vision panel is also provided to allow the viewing of the mix. The lower part of this module provides the sliding maintenance ring and dust seals.

13.4.2.9 Health and Safety

The system has been designed to give the maximum protection to the operators and the surrounding environment. The addition of a sheet covering

will reduce the amount of dust and noise transmitted from the plant, the use of noise treated cladding will reduce the pollution further.

All the equipment is guarded and the access doors to the hoist will be automatically locked when the plant is in operation. It should be noted that the winch hoist will also be enclosed. (Not shown on the drawings.)

The control cabin should be dust free and have an acceptable noise level, it is possible to view the complete mixing operation from the control cabin.

13.4.3 Design of a Batching System Using Overhead Storage

The maximum output size of this plant matches the maximum output of the 2.0 m diameter Rotary mixer, that is, 80 m^3/hour of mixed concrete.

The overall scheme is shown on Drawing 75.W.0051 Sheets 1 and 2. Sheet 1 shows the overall plant layout and Sheet 2 shows the detail of the mixing section. The design of each section of the plant is dealt with in the following sections.

13.4.3.1 Overall Concept

The basic concept with this type of plant is to provide batching and mixing plant which has integral cement and aggregate storage facilities. On delivery the aggregates may be loaded directly into the overhead storage bins from the ground feed bin, the conveyor may be slewed to feed each bin in turn. The aggregates are then discharged directly from the overhead storage into the weigh hopper and hence via a batch conveyor to the mixer.

This type of plant is mainly used for block making and Ready Mixed concrete sites where space and height are not a problem.

Again, the wide use of standard items has been adopted and should hence reduce the initial development funding.

13.4.3.2 Ground Feed Bins and Conveyor

The ground feed bins and associated conveyor are standard items of equipment and have not been modified. The existing range of ground feed bins covers capacities from 20 to 30 tonnes.

13.4.3.3 Aggregate Storage

The aggregate storage bins have not been modified, the only possible area of modification would be the introduction of a two stage feeding system. It is not thought that this would be difficult, and the introduction of an additional short stroke ram to the existing door would provide the needed reduction in feed rate.

The standard bins are available in capacities from 50 to 250 tonnes. This is achieved by the addition of sections on the standard base.

The only modification required in this area is not to the bins, but to their siting relative to the batch conveyor. In the normal company system the bins are mounted across the conveyor, but to allow inclusion of the weigh bins, the hopper has been turned through 90°.

13.4.3.4 Intermediate Weigh Hopper

In order to achieve the required weighing speed, the normal single batch weigh hopper has been replaced by a three bin system. In this case, the number of bins would have to match the number of different types of aggregate to be used. The bins are mounted on a rigid frame, this is to prevent the door vibration loads being transmitted to the load cells. Each bin has three load cells mounted two at one end of the bin, and one at the other. Each bin is provided with an independent discharge door, which allows the weighed batch to fall on to the batch conveyor. As previously noted, the bins have been turned through 90° to allow the aggregates to fall on to a longer length of conveyor. It should be noted that an additional advantage is also gained, this being that the aggregates,

when falling on to the conveyor within the confines of the guide box, will experience an additional mixing phase and will be layered one upon the other, hence preventing the discrete distribution of the normal company system.

13.4.3.5 Batch Conveyor

The batch conveyor remains unchanged, and it is considered that the capacity of the conveyors will not have to be increased to accommodate the greater utilization with the high speed batching system. The conveyor will be in use for longer periods, but with smaller loadings. It has been noted that in the normal batching system, the conveyor is in use for approximately 15% of the plant running time.

13.4.3.6 Cement Storage

The method of cement storage is unchanged, and consists of a silo mounted above the mixing section, the available capacities of these silos are from 20 to 100 tonnes.

13.4.3.7 Cement Weighing

The cement weigh hopper is mounted on three load cells and is fed by a two speed screw feeder attached directly to the cement silo. Discharge is by means of a simple pneumatically operated door and discharge is directly into the mixing chamber.

13.4.3.8 Water Weighing

The water is weighed in a tank supported on three load cells, the feed is from storage tanks positioned around the lower portion of the cement silo. The inputs and outlets are controlled by solenoid valves and the final introduction of the water to the mix is via a large bore tube discharging on to the rotor spinner.

13.4.3.9 Aggregate Holding Hopper

Because of the speed required to introduce the batch to the mixer, an aggregate holding hopper has been provided. This gives a buffer against the variations in batching speed from the conveyor, and also gives a more rapid introduction of the aggregates into the mixer. It would be possible to carry out a check weighing of the aggregates if this bin was mounted on load cells, this is not considered necessary on the normal plant.

13.4.3.10 Interface Module

The interface module forms the top of the mixer and the mounting flanges for the lower discharge doors of water, cement and aggregate holding hoppers. In addition, a vision panel is provided, to allow viewing of the mix. In the application shown in the drawing, the upper and lower parts of the interface module are divided by the addition of a fibre module, the lower portion of the interface module contains the sliding maintenance joint and the mixer spacing ring.

The interface module provide the dust and noise seal between the batching and mixing areas of the system.

13.4.3.11 Mixer

The mixer is mounted on to the mixer section floor. The discharge position may be varied either by repositioning the mixer section, or by varying the outlet on the mixer itself. The mix may be either discharged directly into waiting transport, or into a holding hopper.

13.4.3.12 Support Legs

The support legs are a standard company module and have not been modified.

13.4.3.13 Health and Safety

The system around the mixing section is designed to give the maximum protection to the operators and the surrounding environment. The mixer

section has a cover over the weigh and holding hoppers and provides a dust proof environment. The company standard modules, particularly the conveyors and weigh bins, should have an improved standard of dust and noise protection offered, initially as an option, and ultimately as a standard.

13.4.3.14 Control Cabin

The controls for this system may be either housed in the standard control cabin or the decking around the mixer may be used. This is now possible, as the area previously was not suitable due to the dust and noise from the older type mixers.

13.4.4 Additional Batching Modules

Two additional types of batching modules have been considered. These are:-

1. Fibre addition module.
2. Admixture addition module.

13.4.4.1 Fibre Addition Module

The fibre addition module will be positioned between the two parts of the interface module, and will add fibre directly into the mixing section. The fibre will be added by the use of a high speed chopper feed from stock reels of either glass or steel, the module will be capable of the metered addition of standard lengths of the chosen fibre.

In the case of glass fibre, the chopping heads are already available and working. The length of fibre will vary with individual applications, and this setting should be available in the equipment.

With steel fibre, it is usual to crimp the wire strands prior to introduction to the mix, the chopping equipment is also available and ready crimped wire may be purchased, or the chopper may also carry out this operation.

On the large mixer, multiple feed units may have to be used to allow the required amount of fibre to be added in the time available.

13.4.4.2 Admixture Addition Module

The addition of admixtures to the mix has presented increasing problems to the industry, as the strength of the base mixtures has risen, hence reducing the actual amounts to be added.

The use of a smaller batch size in the Rotary mixer will aggravate the situation, but it is thought that the increasing use of admixtures in the smaller site mixer may indicate a market for an accurate simple dispensing system.

In the case of the batching systems used, the obvious place of addition is to the pre-weighed mix water, the system envisaged is the use of a volumetric dispenser in the form of a variable stroke syringe similar to that used to inject large numbers of livestock with medication. The even distribution of the admixture in the mix water would be increased by a suitably designed nozzle.

13.4.5 Design of the Control System

In considering the control system for the mixing plant, the philosophy as indicated in the Specification has been followed. This being, that the system should be designed to cope with the most complicated system, and then simplified to the lower grade systems.

The type of system used may be either a presently available modular system which is specifically designed for use in the process industries. These systems are available from the simple, up to the most sophisticated, but have the disadvantage that they tend to be expensive and do contain unuseable features. The second type of system available is again process industry based, and which uses programmable logic controllers. The system is programmable and may be expanded from the very simple to the full

process computer, this type of control is seen to be more flexible and less costly than the modular unit approach. The third system is one which would use a microcomputer to control the system, this type of approach is currently available, but again is expensive as it entails the use of the desk top computers which contain unnecessary sophistication. With the increasing use of microprocessors, it may be foreseen that in the near future units will be produced which will be a fraction of the cost of the present modular systems and yet contain the computing power to be completely versatile.

As this project is aimed at the next generation of mixing equipment, it would seem that this should be an area where the company should be involved and if possible, lead the field.

The control system designed has been based on such a system, and is described using this type of equipment.

13.4.5.1 Time Cycle

In the design of a control system, the speed of operation will be the deciding factor, and the complete system must be designed around this parameter. If a cycle time of 20 seconds is accepted as a minimum, then the operation of the remaining discrete operations must be within this time cycle.

If the two types of batching system are considered, the time cycle diagrams may be constructed for each.

a. Scraper System

The diagram from the scraper system is shown in Fig. 64. The discrete 20 sec cycles have been broken down into each unit, the initial cycle is that of batching, this takes a maximum of 20 seconds from initiation to completion of discharge, the initial coarse feed takes 10 seconds followed by a fine feed and stabilization period of 5 seconds, and is completed by a 5 second discharge period. The second cycle is that of transport. This

starts at the time of the start of discharge from the weigh bins (t = 15) and allows 5 seconds to charge the skip, 6 seconds to travel from the bottom to the top of the runway, and then 3 seconds to discharge into the mixer (t = 29 seconds), the remainder of the cycle is for the skip to return to the start position (6 seconds). The third cycle is the mixing cycle. This starts at t = 29 seconds with a charge time of 3 seconds, followed by the minimum mixing time of 10 seconds, the cycle is completed by a 3 second discharge and 4 second door closing period giving a total batch time of t = 46 seconds.

b. Overhead System

The time cycle diagram for this system is shown in Fig. 65. The initial batching stage is the same as for system (a), as is the final mixing stage, the only area of difference is that of transport. The method used is not as discrete as the skip method, this is due to the conveyor and the use of a holding bin. The holding bin can be filled in a 12 second period or less, that is 20 seconds less the charge and discharge times. The overall total batch cycle is slightly longer and is equal to t = 52 seconds.

It should be noted that these times represent the initial batch times which will then be followed by a batch every 20 seconds.

13.4.5.2 Control Diagram

A flow diagram of the control circuits required for the 24 m^3/hour system is shown, together with a schematic diagram of the controls on Drawing 75.W.0060.

a. Schematic Diagram

The schematic diagram is a simple interpretation of the system and detailing the points of data collection used on the flow diagram.

b. Flow Diagram

The flow diagram is split into three parts, these being:-

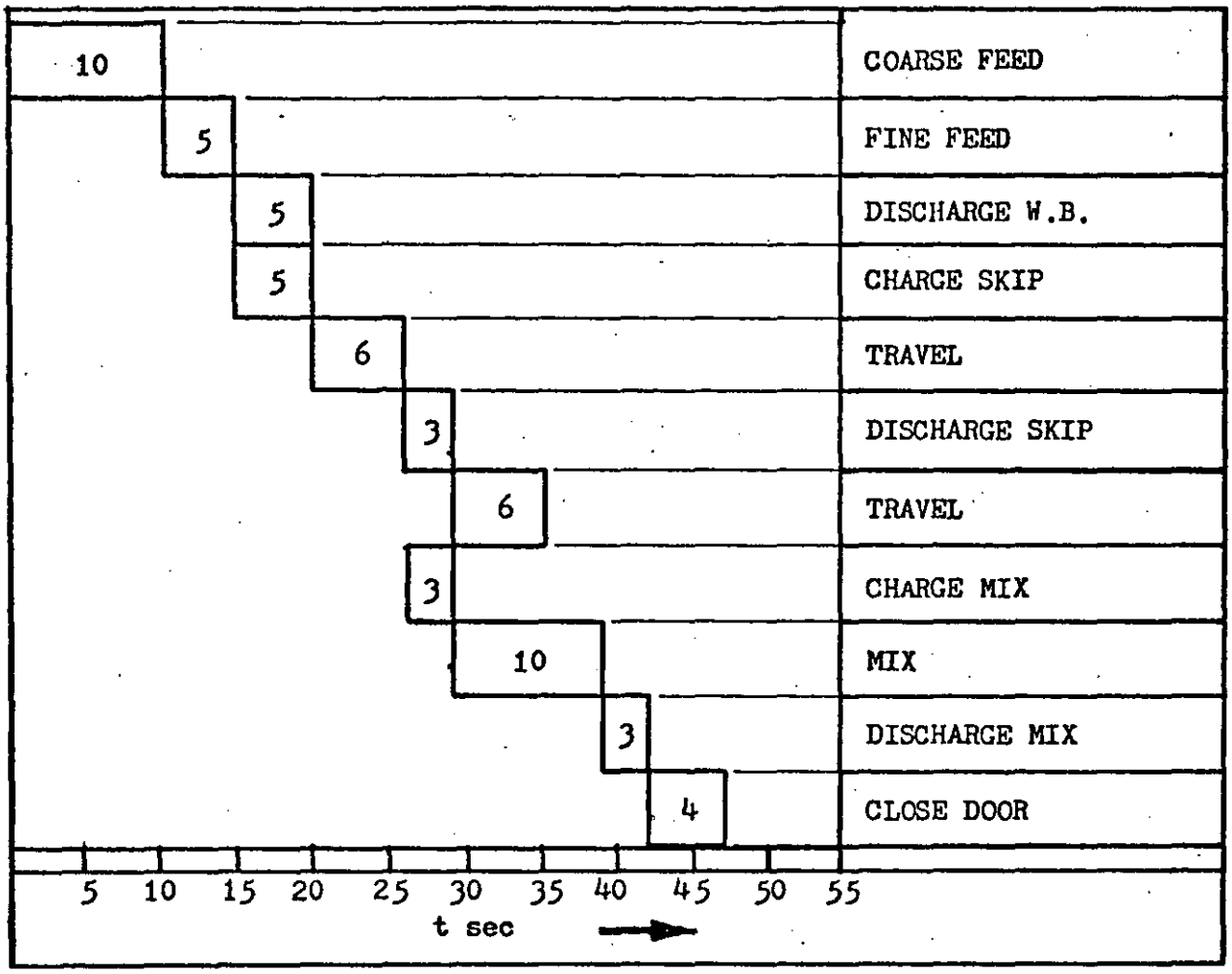
10
5
5
5
6
3
6
3
10
3
4
COARSE FEED
FINE FEED
DISCHARGE W.B.
CHARGE SKIP
TRAVEL
DISCHARGE SKIP
TRAVEL
CHARGE MIX
MIX
DISCHARGE MIX
CLOSE DOOR
5 10 15 20 25 30 35 40 45 50 55
t sec

Fig 64

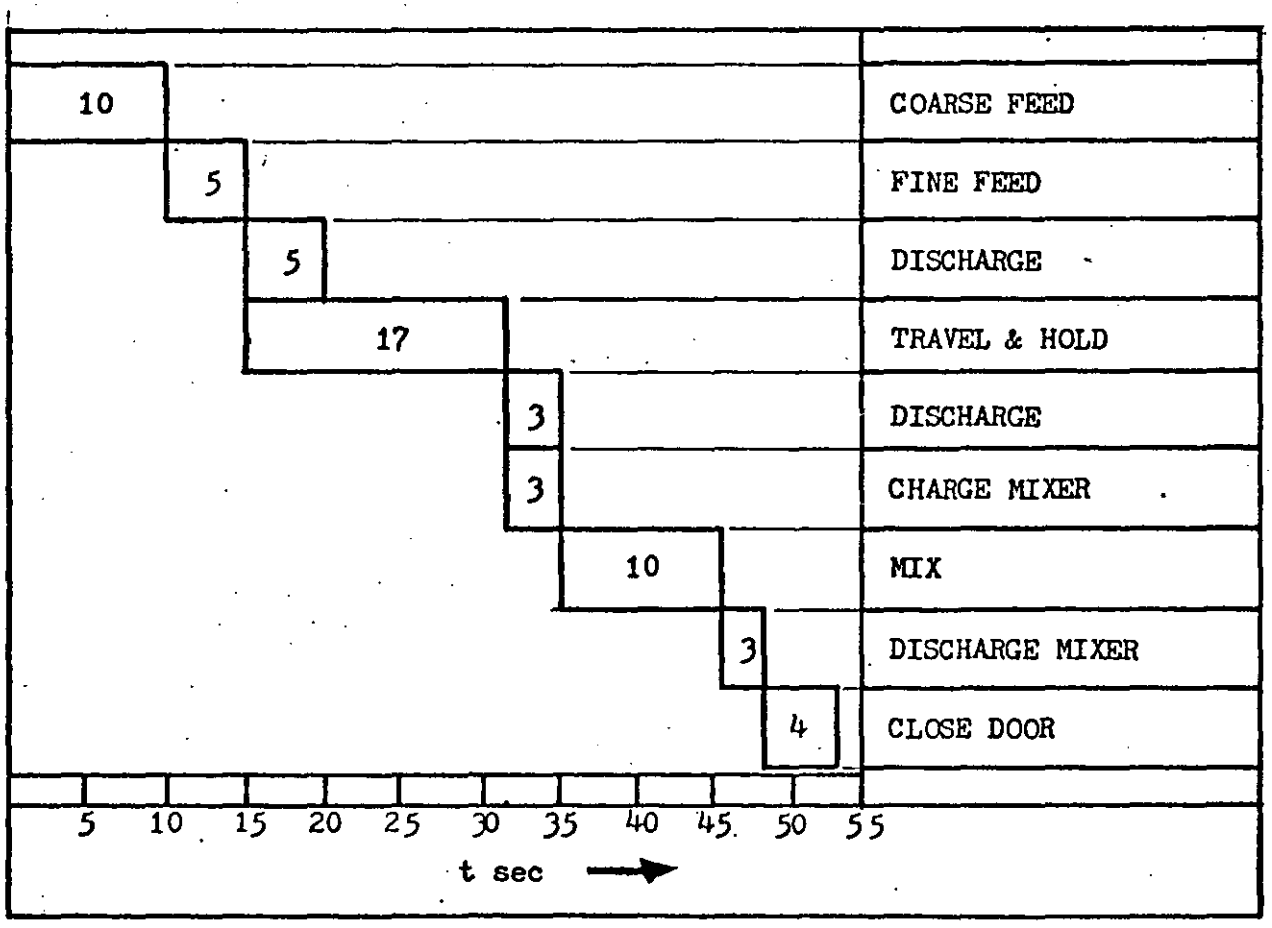
10
5
5
17
3
3
10
3
4
COARSE FEED
FINE FEED
DISCHARGE
TRAVEL & HOLD
DISCHARGE
CHARGE MIXER
MIX
DISCHARGE MIXER
CLOSE DOOR
5 10 15 20 25 30 35 40 45 50 55
t sec

Fig 65

a. Data.

b. Calculation.

c. Execution.

a. Data

In this part of the program the initial action will be either select a manual or automatic recipe. If the manual option is selected then the various parameters needed will be displayed. The program will automatically check if the various parameters are compatible, and if they are, the data will be transferred to the next part of the program.

In the case of the automatic selection, any one of the standard recipes may be selected. These recipes may be either the standard ones used by the company which have been programmed at the time of installation of the equipment, or may be pre-programmed modules containing either the British Standard mixes (55) or the Department of Environment mixes, Ref.14. These programs would be checked by the use of trial mixes and the required changes incorporated. The quality control checks may also be fed into this part of the program, and thus allowing the ingredients to be modified to give the most economical cement usage and hence, the most competitive concrete.

b. Calculation

Having obtained the mix parameters, the control settings have to be calculated. The aggregate contents are modified by their water contents, this also changes the amount of mix water required, the remainder of the calculations set up the control registers. It is noted that these settings will contain the acceptable limits and will be used possibly to set the f value in the $e > f$ checks on the load cell readings.

c. Execution

An initial part of the program is to show that the mixer is operating

and in particular, that the air seal is functioning and the rotor is running, this is carried out before the full mixing program is initiated.

The execution of the mixing control instructions for each of the batching cycles are carried out simultaneously and these are described first.

Aggregate

Consider aggregate 1 as shown in drawing 75.W.0060. The first instruction is to ascertain the possition of aggregate weigh bin doors, if the door is open an instruction to close it is given, if after a number of cycles the door is still open, then a warning light is activated and the program stops. If the door was closed, a check is made, if the bin is full then the next part of the program is not executed. If the bin is empty or part full, the correct type of feed is selected and the weighing operation is commenced, a check is also incorporated to ascertain if the bin is over-full, if this is so a warning light is activated and the batching cycle stops. When the correct amount of aggregate has been weighed, a counter is set and the next part of the cycle is awaited.

Water

The water weighing cycle is basically the same as that used for the aggregates, but incorporates at the end of the cycle an additional check to ascertain if the required admixture has been added to the water. If not, a counter check is carried out, and again a warning light is activated and the program stopped.

If the admixture has been added, then the counter is set.

Fibre

When fibre is required to be added, the initial check is that sufficient stock of fibre is available for the mix, this is carried out by checking the reel weight against the specified amount required. The next

check is to find if the mix is in the mixer, if not, the cycle is repeated until the mix is available, the fibre feed is then started and the load cell readings compared until the specified amount has been added, the feed is then stopped and the counter set.

Admixture

The admixture cycle is similar to the fibre. The program checks the stock of solution and the mix situation, the amount required is then set. The status of the water weigh bins is then checked for the door being closed, and the water not having been discharged, if these are acceptable the admixture is injected into the mix water and the counter set.

Mix Charging

At a time when the three aggregate hoppers are weighed off, a check is made on the counters and when the check is acceptable, the skip position is ascertained, and if it is under the hoppers the bins are discharged into the skip, a check is made that all the bin doors are open. It is also possible to determine if the bins are empty by comparing the load cell readings. In order not to start the skip if the mixer is not ready, a comparison is made on the time to end of mix against the time for the hoist to pull the skip to the top of the runway; if this is acceptable, the door position of the mixer is checked, if the door is open the time for the door to be closed is compared with the skip hoist time, if the two are not compatible, the skip is stopped. A further check is made upon the mixer door position, if open, a check is then made on the condition of the cement and water batching cycles, if these are satisfactory, the skip is again started and the mixer door closed, the satisfactory closing of the door is checked with a counter. When the door is closed the discharge of the cement and water are ordered, and the position of the skip checked, it should be noted that it is possibly better to carry out the skip position check before the discharge of cement and water, but

this will depend upon the timing of the skip.

Mixing

The mix time is initiated and the cement and water discharge doors are closed, and are checked for full discharge. The slump of the mix is compared with that required only after a minimum time, if the mix is below the required slump, a trickle feed of water is added until the required value is gained. The mix time is checked and finally the correct addition of the required fibre is ascertained, the mixer door is then opened.

Mix Counter

A mix counter is incorporated at the initiation of the batching phase and the batching is stopped when V = U. (That is the number of batches required is equal to those produced.)

Comments

The control program is detailed for the skip loaded mixer, but with slight modifications, would work adequately for the larger system.

The diagram is not intended to contain all the intricate details, but to give a general idea of the complexity required within the system.

The size of the stored automatic recipes would be limited by the storage of the computer, but as most plants use only a limited number of mixes, this would not be a disadvantage.

14.0 COSTING

The costing of the system has been divided into three parts, these being:-

1. Mixers.
2. Control systems.
3. Total systems.

14.1 COSTING OF MIXERS

The detailed designed pre-production mixers have been costed. The main structure to be produced by the company, the rotor (made by spinning) and stator to be subcontracted, and the remaining items being bought out. All these figures have been summated to give a total works cost price. To this amount have been added the overheads for selling, administration, development, and finally profit. The figures quoted below are correct at June 1979.

14.1.1 1000 mm Diameter Mixer

The total selling price of this mixer would be £2758.00.

14.1.2 2000 mm Diameter Mixer

The total selling price of this mixer would be £5720.00.

14.1.3 Cumflow RP 550

The current selling price of the RP 550 (comparable with 1000 mm ϕ) is £5561.00.

14.1.4 Cumflow RP 1500

The current selling price of the RP 1500 (comparable with 2000 m ϕ) is £12077.00.

14.1.5 Comparisons

It can be seen from Table 56 that the Rotary mixer should have a price advantage over the conventional mixer. By using the data curves

MIXER TYPE	OUTPUT m^3/hour	COST £	COMPETITIVE RATIO
CUMFLOW RP 550	24	5561	-
ROTARY 1000	24	2758	2.0
CUMFLOW RP 1500	60	12077	-
ROTARY 2000	80	5720	2.1

Table 56

produced in Chapter 3, a basic comparison may be made between the Rotary mixer and the analysed competition.

14.1.6 Indexed Data

In order to make a valid comparison, the present prices must be adjusted to those prevailing at the time of the survey. The index will be the cost of equipment in 1976 divided by the cost of the same equipment in 1979.

$$\therefore \quad \text{Index} = \frac{\text{cost in 1976}}{\text{cost in 1979}}$$

In order to obtain a representative value, the range of company equipment is considered, and is shown in Table 57.

MACHINE RP	LINER COST		INDEX	
	1976	1979		
400	2847	4614	0.62	
550	3748	5561	0.67	
850	4633	6322	0.73	
1250	8801	11301	0.78	
1500	9878	12077	0.82	
3000	13077	17326	0.75	
			4.37	TOTAL
			0.72	AVERAGE

$\therefore$ Index used = 0.72

Table 57

14.1.7 Comparative Plots

In the plots produced in Chapter 3 the following criteria were considered and will again be used.

1. Nominal capacity.
2. Power.
3. Cost.
4. Weight.
5. Output.

The comparative data is detailed in Table 58.

PLOT	AXIS		1000 mm		2000 mm	
	X	Y	X	Y	X	Y
14.1	COST	NOM.CAP.	2008	200	4118	670
14.2	COST	WEIGHT	2008	1202	4118	4320
14.3	WEIGHT	NOM.CAP.	1202	200	4320	670
14.4	OUTPUT	NOM.CAP.	24	200	80	670
14.5	POWER	NOM.CAP.	11	200	30	670
14.6	WEIGHT	OUTPUT	1202	24	4320	80
14.7	POWER	OUTPUT	11	24	30	80
14.8	COST	OUTPUT	2008	24	4118	80
14.9	COST OUTPUT	OUTPUT	84	24	51.5	80
14.10	COST OUTPUT	OUTPUT	84	24	51.5	80

Table 58

14.1.8 Summary of Plots

Considering each plot in turn.

Plot 14.1 Nominal Capacity Against Cost

In this plot the Rotary line indicates that the projected cost/litre is not the best, but is in the upper 10% and is better than either Teka or Liner.

Plot 14.2 Weight Against Cost

The Rotary line of this plot indicates that the mixer is the most

cost/weight effective mixer available, even more effective than the large reversing drums used in the U.S.A.

Plot 14.3 Nominal Capacity Against Weight

See Plot 14.1.

Plot 14.4 Nominal Capacity Against Output

As would be expected this mixer has a marked different ratio to the more nominal mixers due to its increased number of cycles/hour. This also reflects upon the position of the lines in Plots 14.1, 14.3 and 14.5, and it is suggested that the more appropriate plots to consider are those containing the output term.

Plot 14.5 Nominal Capacity Against Power

The powers used are the highest when compared to the nom capacity and this would, from previous experience (Erich Whirler) (See 4.1.2.2) indicate a fast and good mixing action (Q.E.D.).

Plot 14.6 Output Against Weight of Mixer

This plot shows that the Rotary machine has the lowest weight per metre of concrete produced yet available.

Plot 14.7 Output Against Power

In this plot the Rotary line indicates that the power is the lowest of the compulsory type mixers and is approaching the less efficient of the Tilting Drum mixer areas.

Plot 14.8 Output Against Cost

This plot is perhaps the most startling, as may be seen, the cost/metre is less than the best competitive mixers by a factor of 4 (that is £200 per metre for the Teka/Liner and £50 per metre for the Rotary).

Plot 14.9 and 14.10 Output Against Cost/Output

Again, the Rotary is significantly better than the nearest competition. It should be noted that in some cases the need for a more sophisticated

batching system will reduce this advantage.

14.1.9 Simplified Mixer

As previously noted the use of a reduction gearbox may not be the ultimate design, so at this stage a very simple cost comparison was made between the use of a reduction gearbox and the use of a simple belt drive. In the case of the small mixer no suitable "V" belt drive could be found, so a toothed belt drive was used, this introduced an additional cost element, as these drives are more expensive than the normal "V" belt. In the case of the larger mixer, a standard "V" belt drive was found and considered. The additional mounting structure for both the motor and main shaft bearings have been considered. It should also be noted that it may be possible to drive the air seal fan from an additional drive belt on the motor pulley, this again would save on the machine cost. An estimate of the saving due to this modification is also included in the modified price shown in Table 59.

	1000 mm	2000 mm
GEARBOX	£492	£925
BELT	£390	£820
SAVING	£102	£105

Table 59

Comments

From this table it can be seen that the estimated saving through using a belt drive would be small and would not have the advantages of a production made gearbox, in fact, the saving in the cost of the 10 m ϕ mixer using a toothed belt is non existent and in fact is more expensive by £40. The figures used above have assumed a simple "V" belt drive using an intermediate shaft to obtain the reductions within the required space.

14.2 BATCHING PLANTS

In considering the cost of the batching plant, a standard 60 m^3/hour installation has been considered, initially using a Cumflow RP 1500 and secondly, considering a Rotary 2000 mm. ϕ

14.2.1 Standard Items

The following items will be common between the two systems:-

a. 50 tonnes aggregate storage bin.

b. Batch conveyor.

c. 30 tonnes cement silo.

d. 600 kg cement weighing.

e. 300 kg water weighing.

f. Connecting cable.

14.2.2 Additional Items on RP 1500 System

a. 2500 kg aggregate weighing.

b. RP 1500 mixer and structure.

c. Controls.

d. Pheumatics.

14.2.3 Additional Items on Rotary 2000 System

a. Three aggregate weigh bins.

b. Rotary mixer and structure.

c. Controls.

14.2.4 Cost of RP 1500 System

The total cost of the RP 1500 system excluding ground bin and radial conveyor is estimated to be £54,500.

14.2.5 Cost of Rotary 2000 mm System

The cost of the Rotary 2000 mm mixing system excluding ground bin, radial conveyor and control system is £44,400.

The cost of the control system will depend upon the type used. In the course of the project, quotations from four companies have been received. They all quoted to the same specification, and the shown prices have been adjusted to be comparable in terms of equipment and facilities supplied.

System 1 (Programmable Logic Controller) Control Cost £5,205

System 2 (Process Industry System) Control Cost £20,750

System 3 (Process Industry System) Control Cost £8,819

System 4 (Micro Computer) Control Cost £10,500

Now, the total system costs may be calculated, these are shown in Table 60.

PLANT	CONTROL	COST £
RP 1500	NORMAL	54500
ROTARY 2000	1	49605
ROTARY 2000	2	65150
ROTARY 2000	3	53219
ROTARY 2000	4	54900

Table 60

14.2.6 Comments

In considering the total mixing system costs it is possible, by using a new type of control system, to actually reduce the cost of the whole system when using the Rotary mixer. In fairness it should be said that the total cost of the normal mixing system would also be reduced if this control system was used. Hence the presupposed idea that the more sophisticated batching system would be more expensive has proved to be incorrect. It may even be said that if a more normal process type control system is used, the price would still show a reduction. This is mainly due to the reduced cost of the mixer, and by improving the environment around the mixer, the need

for a separate control room has been deleted. These comments apply to the larger plant, but it would be possible by using the Type 1 control system on the dragline system to at least maintain the present price whilst offering an improved system which, if used correctly, could reduce the cement content of the concrete and hence save money. If the plant is able to run automatically then the need for an experienced mixer driver is removed, again reducing cost.

14.3 CONCLUSIONS

The conclusions may be divided into two areas:-

1. Mixers.
2. Batching.

14.3.1 Mixer

From the graphical comparisons with the competitive data, the Rotary machine is an improvement over present equipment. The improvement in the quality of the concrete is borne out by the higher power used per batch, but the mixer is more efficient by producing more batches in a specific time. The cost and weight of the mixer is lower than the present types, a four-fold increase in output for the same cost.

The simplified mixer shows possible savings, but these should be weighed against the additional work required on assembly of the mixer, and the possible increase in physical size.

The Rotary mixer shows all the correct indications of being an excellent new product to initially complement the Cumflow, and then possibly take the major market share.

14.3.2 Batching

In considering the cost of the batching system required to feed the new mixer, the additional cost has not materialized, in fact, it is suggested

that not only will the system considered have distinct advantages over that in present use, these will mainly involve the storing and processing of data, and it may be that the company should consider this type of system for use on their present equipment.

15.0 PROJECT CONCLUSIONS

During the course of the project the need for the company to develop a new line of mixers became evident. The present range was popular, but did not meet the needs of the developing concrete industry.

The market survey indicated that a new mixer needed to be simple to use and maintain, and that the concrete mixed should be of high quality.

The mixer should also be able to mix the newer developments in concrete, such as glass and steel fibres, and the various new admixtures. The need for low cost automation that gives a speedy, reliable performance, at an acceptable cost.

The company is developing into new fields and more advanced technology was needed to carry this over into its mixing equipment.

The development of the Rotary mixer to the present stage has shown that it has all the above requirements and that, with a reasonable degree of development, could be integrated into the present range of equipment for the concrete and construction industry. It also shows great potential in the area of chemical mixing.

The Rotary mixer has many advantages, and these should be developed on a logical and ordered basis. In the next chapter the future development work is detailed, the cost would be relatively small, and at the end of the work a fully balanced and proven decision may be made on the scale of introduction and on the methods to be used for its production and marketing.

15.0 PROJECT CONCLUSIONS

During the course of the project the need for the company to develop a new line of mixers became evident. The present range was popular, but did not meet the needs of the developing concrete industry.

The market survey indicated that a new mixer needed to be simple to use and maintain, and that the concrete mixed should be of high quality.

The mixer should also be able to mix the newer developments in concrete, such as glass and steel fibres, and the various new admixtures. The need for low cost automation that gives a speedy, reliable performance, at an acceptable cost.

The company is developing into new fields and more advanced technology was needed to carry this over into its mixing equipment.

The development of the Rotary mixer to the present stage has shown that it has all the above requirements and that, with a reasonable degree of development, could be integrated into the present range of equipment for the concrete and construction industry. It also shows great potential in the area of chemical mixing.

The Rotary mixer has many advantages, and these should be developed on a logical and ordered basis. In the next chapter the future development work is detailed, the cost would be relatively small, and at the end of the work a fully balanced and proven decision may be made on the scale of introduction and on the methods to be used for its production and marketing.

16.0 FUTURE DEVELOPMENTS

A logic diagram of the possible future development policy is shown in Fig. 66.

16.1 COMPANY DECISION (INITIAL)

Initially the company must decide the most suitable path for them to follow, this must not only take into account the devleopment of this system, but also the development of the other parts and products of the company.

16.1.1 Long Term Developments

Into this decision must enter the likely economic upturn time of the middle 1980's. The present moves on the reduction in the use of energy, this has particular reference to the concrete production industry, not just in the energy used to mix the concrete and to move the raw materials, but in reduction in the amount of cement used in each cubic metre of concrete. By the use of better mixing and batching systems, together with the use of computer base quality updating (Ref.57) the overall cost can be lowered significantly. The main cost factor in concrete is cement, and the production of cement is very energy intensive.

In addition to the direct energy saving from improved systems, the production of a small mixer could well change the methods of mixing and distribution of ready mixed concrete. The need to produce a more effective transit mixer has been known for some time, and the possible development of a simple batching and mixing system which is truck mounted. This may either be used in a similar way to the present truck mixer, or to be positioned on a site and then replenished with cement and aggregates using normal bodied lorries. This would reduce the initial outlay on specialist vehicles and reduce the need for large central batching plants.

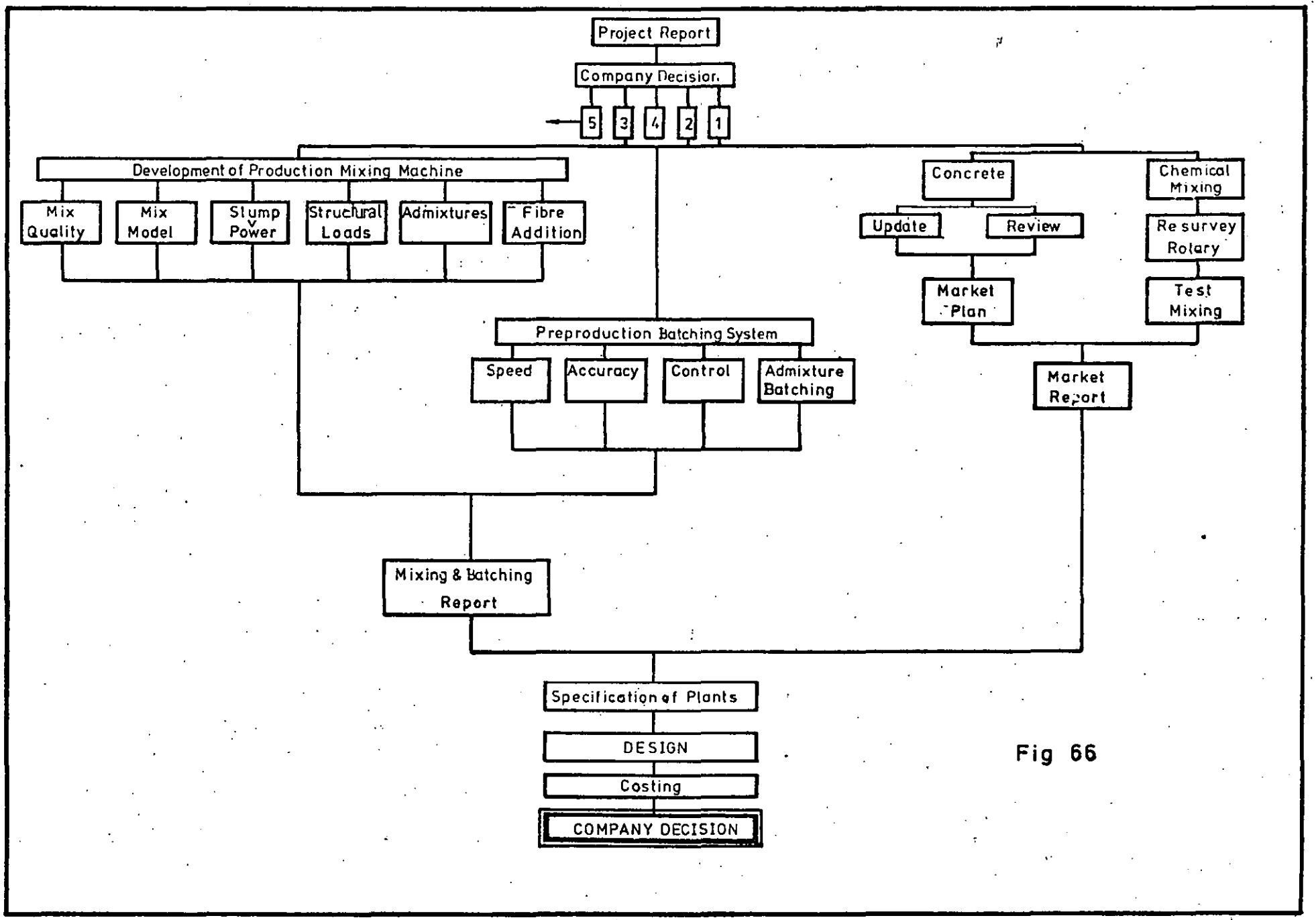
Project Report
Company Decision
5
3
4
2
1
Development of Production Mixing Machine
Mix Quality
Mix Model
Slump Power
Structural Loads
Admixtures
Fibre Addition
Concrete
Chemical Mixing
Update
Review
Re survey Rotary
Market Plan
Test Mixing
Preproduction Batching System
Speed
Accuracy
Control
Admixture Batching
Market Report
Mixing & Batching Report
Specification of Plants
DESIGN
Costing
COMPANY DECISION

Fig 66

In developing the Giraffe concept of saving waste on building sites and with the increasing costs of cement and sand. The production of an on site mortar mixing system with hoppers that could be charged by the Giraffe S.P.V. with a front loading bucket. The system could also have an accurate admixture dispensing system. This has the twin advantages of saving on site cost and possibly making the Giraffe a more viable proposition for the smaller site.

It is also possible to foresee the development of the Rotary mixer into a larger diameter machine using the residual time contained within the mixer on one revolution to give the required mixing time, that is, the mixing would be complete in one revolution of the mix around the mixer. If this was linked with a suitably accurate continuous feeding system, the Rotary batch system would be changed into a Rotary continuous mixing system, and would hence give even greater advantages in output and power utilization.

The above would indicate ample scope for further development of the basic principle in the construction industry, but it should be noted that this does not include any development in the chemical mixing sphere. As has been previously indicated, the marketing in this area was based upon incorrect concepts mainly due to the non availability of a prototype mixer, which led to misconceptions in the areas of mixing speed, damage and the technology needed to make and run the Rotary mixer. The need is to re-assess this area with the use of specific information and possible trial backup must be carried out if this area of mixing is to be fully developed.

16.1.2 Financial and Corporate Implications

In this area the company will need to know the approximate cost of development of this system. At this stage no attempt has been made to assess this side of the future development, as it is not considered to be

within the brief. The impact upon the present corporate strategy of the company will also have to be considered, but again, this is not considered to be directly within the project briefing.

16.2 POSSIBLE OPTIONS

When the future is viewed purely from a Marketing and Technical aspect, three main routes would be indicated. The other routes would be dictated by commercial or corporate decisions.

16.2.1 Route 1

To carry out the full development scheme as indicated in Fig. 66, within the shortest possible time (say 12 months) using more than one person.

16.2.2 Route 2

To carry out the full development scheme, but only using one person (say two years).

16.2.3 Route 3

To carry out the development of the concrete side of the scheme, and then market this equipment, and then carry out the chemical and allied marketing. This route gives the advantage of providing a proportion of development cost return, but does involve capital investment in the manufacture of the mixers etc. It also has the disadvantage of only having equipment designed for the concrete industry, and may well be less economical in the long run.

16.2.4 Route 4

To stop the project, or to shelve for possible resurrection at a further date.

16.2.5 Route 5

Any alternative or combination of the above.

16.3 DETAIL DEVELOPMENT

If either Route 1, 2 or 3 are followed, the work detailed in the following sections will be needed.

The work may be divided into three main areas, these are detailed below, together with the chapters relating to them:-

a. Devleopment of Production Model. (16.4)

b. Development of Production Batching. (16.5)

c. Chemical and Concrete Mixer Market. (16.6)

The development of (a) and (b) will be run concurrently, but possibly as separate entities.

16.4 DEVELOPMENT OF PRODUCTION MIXERS

In the devleopment of a production mixing machine, it is assumed that the two pre-production machines have been made from the designs available. The need for two machines has already been discussed. All the following test requirements are assumed to be carried out, in whole or in part, on the two machine sizes.

16.4.1 Mix Quality

The initial part of the investigation is to confirm, in depth, the continued increase in mix quality as noted in the initial test program. This testing would involve a similar program to that used in Phase 1, using the Rapid Analysis Machine and involving the production of test cubes. The analysis programs for the data produced are available and so would allow a day to day monitoring of the analysis results and indicate modifications to the tests used.

As can be seen from the diagram, the successful completion of this section is considered a pre-requisite of the continuation of the overall mixer development.

16.4.2 Mixing Model Development

The model developed to date is lacking one parameter, that of a variation in mixer diameter, with the data available from 16.5.1 the model may be extended and checked for the parameters already developed and for the diameter effect. By using the additional data from a 1.0 m mixer a third diameter check may be made, hence indicating any variable needed to correct the equation, this is of course also true of the parameters and constants used in the Phase 3 formula.

16.4.3 Slump v. Power

In the earlier investigations, it may be seen that a relationship between the power used by the mixer and the workability of the concrete exists, this relationship has been investigated in some detail by Tattersall (56).

The further investigation of this work would have a two-fold advantage, the first being the more simple introduction of the data needed to calculate the power required for the determination of individual workability values, and secondly, the production of a small mixer from which direct readings of workability of any concrete may be found and hence the possible redefinition of workability using the two constant method. This type of test would have the advantage of being completely automatic and the apparatus could be used on site and in the laboratory. The equipment would be simple to make, maintain, and use, hence giving most of the requirements for the introduction and actualuse of a new piece of test apparatus and possible a new standard.

16.4.4 Structural Loads

In the design of the pre-production mixers the actual structural loadings applied by the mixer were not known. In order to carry out the most economical structural design, the actual applied loads need to be

known. In order to obtain the data, a program of both dynamic and static structural testing should be carried out on the pre-production mixers.

16.4.5 Admixtures

The addition of the commonly used admixtures should be carried out. This would be introduced with the water, and the mix carried out as normal.

The mix should then be analysed to determine the total effects of its addition, if possible these comparisons should be made against a normally mixed sample.

16.4.6 Fibre Addition

The addition of both steel and glass fibre should be carried out using the normal presently available methods of addition. The results should be compared with those available from other sources, and again, if possible compared with those of concrete mixed in conventional mixers. In addition, the investigation of any new methods of introduction should be investigated and reported upon.

16.5 DEVELOPMENT OF PRE-PRODUCTION BATCHING SYSTEM

In the project and specifications two types of batching systems have been developed. These systems are based on the products made by the company at present, and hence are a known quantity, but in certain areas an amount of development will be required.

A pre-production batching plant possibly based upon the scheme for the 24 m^3/hour dragline could be designed and made at a minimal cost. The dragline feed system can be replaced by small rechargeable hoppers, but still fitted with a similar type of door. The skip hoist could be a modified standard system and the mixer will be available, the cement and water weighing systems need to be made but the actual mounting structure may be simplified as the main considerations will be those listed below.

16.5.1 Speed

The main difference in this system will be the speed at which it is required to function. In the pre-production system, close monitoring of the achieved speed will be necessary, this will be closely allied to the required door sizes and the need to provide two-stage feeding if the door sizes become very large. The effect of bin shape on speed of discharge, also the types of door and their reliability must also be considered.

The response time of the load cells and the effect on the control system will be of interest.

The skip hoist, if used, will have to be increased in speed to cope with the high transport speeds. It is considered likely that the possible use of the "omni conveyor" will be studied.

The speed and operation of the mixer, batching interface should also be considered, and the times for the operation of doors and discharge are of importance.

16.5.2 Accuracy

The accuracy of the weighing system must be ascertained and the effect of increases in the speed of operation defined. The differences in the system accuracy by the use of individual load cells should be considered, and sufficient data obtained to develop a cost effective system.

16.5.3 Control

In the choice of control system, it is envisaged that several systems will have to be evaluated. The simplest will be that of a modular system at present available. This may be interchanged with the programmable logic controller, and possibly followed by the mini computer system.

The data obtained from each system can be compared and the "best" system chosen.

It is thought that the control systems will be one of the most difficult areas to achieve a satisfactory answer within the time scale.

16.5.4 Admixture Batching

Investigations should be carried out into the design and testing of an accurate low cost admixture batching system.

16.6 MARKETING

The remaining marketing is seen as a two-pronged attack, the first is to check the concrete market, and the second is to carry out a survey of the chemical mixing scene.

16.6.1 Concrete Mixing

In the sphere of concrete mixer marketing, there are two areas which need review. The first is that of updating of existing information. Secondly, it is necessary to carry out a review of the ready mixed concrete industry to ascertain the impact of the new round of energy price increases. This work would include the development of a model of the normal ready mixed concrete activities and should allow any possible areas of saving to be pinpointed. It should be noted that the help of the Tilcon part of the group may now be available. This action is considered necessary because of the possible implications of the toroidal mixing machine being used in a mobile form.

On completion of these activities, a specific marketing plan could be developed to allow the integration of the new mixing system into the existing market.

16.6.2 Chemical Mixing

In the area of chemical mixing, the whole marketing exercise will have to be repeated with the correct data on the Rotary mixer.

The survey would need to identify the most profitable initial areas of penetration for the Rotary mixer, both at home and overseas. The market could be tested by using the prototype or pre-production mixer to carry out trial mixes for interested parties.

This survey would be translated into specific market opportunities and would also detail the cost of the various strategies indicated.

16.7 COMPANY DECISION (FINAL)

The results of the above areas of investigation will be detailed in a composite document and presented to the company board for assessment and discussion on future development.

REFERENCES

1. Abrams D.A., Design of Concrete Mixtures Bulletin No.1 Structural Materials Research Laboratory. Lewis Institute (Chicago), December 1918 pp. 1-20.
2. U.N. World Trade Statistics.
3. British Standard 12 : Portland Cement.
4. British Standard 4029 : Sulphate Resisting Portland Cement.
5. British Standard 4246 : Low Heat Portland Blast-Furnace Cement.
6. British Standard 146 : Blast-Furnace Cement.
7. British Standard 882, 1201 : Aggregates from Natural Sources for Concrete.
8. British Standard 812 : Methods for Sampling and Testing of Mineral Aggregates Sands and Fillers.
9. Spratt B.H., An Introduction to Lightweight Concrete. Cement and Concrete Association Pub. 45,001 pp.5.
10. British Standards Institution 3797 : Lightweight Aggregate for Concrete.
11. British Standards Institution 3681 : Methods of Sampling and Testing of Lightweight Aggregates for Concrete.
12. Neville A.M., Properties of Concrete, pp.561. Pitman 1975.
13. Owens P.L., Basic Mix Methods, C. & C.A.
14. Teychenne D.C., Franklin R.E., Entroy H.C., Design of Normal Concrete Mixes, Department of the Environment.
15. Granville, W.H., Collins A.R., and Matthews D.D., The Grading of Aggregates and Workability of Concrete, Road Research Paper No. 5, (London H.M.S.O. 1947)
16. British Standard 1881 : Part 2.
17. Neville A.M., Properties of Concrete, pp.199. Pitman 1975.
18. Neville A.M., Properties of Concrete, pp. 234. Pitman 1975.
19. Newman, K., Ready Mixed Concrete and its Role in the Construction Industry, Conference on Ready Mixed Concrete, Dundee Univ., 1975.

20. Growther G., A Review of Production Methods and their Developments on the Ready Mixed Concrete Industry, Conference on Ready Mixed Concrete, Dundee Univ., 1975.

21. Anon, Cement and Concrete Association Training Notes LS 2505 1975.

22. Blakey H., High Workability Concrete. One Day Symposium. What's New in Concrete, East Midlands Concrete Society.

23. The Concrete Society, Fibre-Reinforced Cement Composities, Technical Report No. 51, July 1973.

24. The Concrete Society, Polymer Concretes, Technical Report No. 9, January 1975.

25. Taylor W.H., Concrete Technology and Practice, Appendix 1. McGraw Hill, 1977.

26. Kompass Trade Directory, available for most countries world wide, date depends upon country, Kompass London.

27. A.B.C. Europ Trade Directory 1978, Europ Export, London.

28. Frasers Canadian Trade Directory, 65th Edition 1974, Frasers Canada.

29. Thomas Register of American Manufacturers, 1978, Thomas Pub. Co. New York, U.S.A.

30. Who Makes Machinery 40th Edition 1978, (V.D.M.A.), Pub. Vere Deutscer, Germany.

31. Garlinghouse L.H., E.R.E. The Omni Mixer, A New Approach to Mixing Concrete, A.C.I. Journal, 69-21, 1971.

32. Anon. S. & P. British Standards Tests.

33. Growther G., A Review of Production Methods and their Development in the Ready Mixed Concrete Industry. Conference on Ready Mixed Concrete, Dundee 1975.

34. Joisel A., Concrete Homogeneity and Concrete Mixers, L'Institut Tochnique du Batiment et des Travaux Publics Paris 1949.

35. Johansson Arne., The Relationship Between Mixing Time and Type of Concrete Mixer., Hardlinger NR 42, Swedish Cement and Concrete

Research Institute at the Royal Institute of Technology, Stockholm, Sweden.

36. Many Testing of Eleven Danish Concrete Mixers, Danish National Institute of Building Research, 1951.

37. British Standards Institution B.S. 3963 : Method for Testing the Performance of Batch Type Concrete Mixers, London, pp 16.

38. British Standards Institution B.S. 1881 : Methods for Testing Concrete.

39. American Society for Testing and Materials Standard Specification for Ready Mixed Concrete A.S.T.M. Standards part 10, pp.56-65, A.S.T.M. c 94-65.

40. American Concrete Institute A.C.I. 614.59 Recommended Practice for Measuring Mixing and Placing Concrete, Detroit pp.31.

41. National Ready Mixed Concrete Association Recommended Practice for Measuring the Uniformity of Concrete Produced in Truck Mixers, Silver Spring National Ready Mixed Concrete Association, 1962, pp.7, pub. No. 105.

42. United States Department of the Interior, Bureau of Reclamation Concrete Manual. A manual for the control of concrete construction 7th Revised Edition, Demar 1966, pp.642.

43. Road Research Laboratory, Concrete Roads Design and Construction, London H.M.S.O. 1955, p.402.

44. German Standard DIN 459 August 1972, Concrete Mixers Definitions - Sizes - Requirements, Berlin Germany.

45. Bozarth F.M. Influence of Inbalances in Charging of Cement and Water on Mixing Performance of an 8 Cubic Yard Central Plant Concrete Mixer, "A Case Study", U.S. Department of Transportation, 1967.

46. Saucier K.L., Evaluation of Spiral Blade Concrete Mixer, Shelbyville Reservoir Project, Shelbyville, Illinois, U.S. Army Engineer Waterways Experimental Station, U.S.A. 1967.

47. Anon. Evaluation of a Concrete Mixer of the Turbine Type, U.S. Army

Engineer Waterways Experimental Station U.S.A. 1959.

48. Bozarth F.M., Granley E.C., Grieb W.E., A Study of Mixing Performances of Large Central Plant, Concrete Mixers, U.S. Department of Transportation, 1966.

49. Anon. Testing of Liner Concrete Mixers, International Research and Development, 1969.

50. Anon. Liner Mixing Tests, Liner Concrete Ltd., 1938.

51. Specification Mixer Testing E.D.C./M.E.P./SPEC 1/ISSUE 2.

52. Student Project, Engineering Design Centre, Loughborough University of Technology, Loughborough, Leicestershire.

53. Test Report E.D.C./M.E.P./TEST 1.

54. Concrete Year Book 1976. Cement and Concrete Association pp.600-619.

55. British Standard 5328 : 1976 Methods for Specifying Concrete.

56. Tattersall, G., Fresh Concrete and the Workability Problem, Conference on Ready Mixed Concrete, Dundee University, 1975.

57. Hayes J.B., & Nielson P.H., Recent Developments of Ready Mixed Concrete Batching Plant and How to Control the Complexity of the Ready Mixed Business, Conference on Ready Mixed Concrete, Dundee Univ., 1975.