This item was submitted to Loughborough's Research Repository by the author.
Items in Figshare are protected by copyright, with all rights reserved, unless otherwise indicated.

The technical institutes in Hong Kong 1969 to 1980 : a study of their development

PLEASE CITE THE PUBLISHED VERSION

PUBLISHER

© D.D. Waters

LICENCE

CC BY-NC-ND 4.0

REPOSITORY RECORD

Waters, Deric D.. 2019. “The Technical Institutes in Hong Kong 1969 to 1980 : A Study of Their Development”. figshare. https://hdl.handle.net/2134/10491.

Loughborough University

This item was submitted to Loughborough University as a Masters thesis by the author and is made available in the Institutional Repository (https://dspace.lboro.ac.uk/) under the following Creative Commons Licence conditions.

creative commons

COMMONS DEED

Attribution-NonCommercial-NoDerivs 2.5

You are free:

- to copy, distribute, display, and perform the work

Under the following conditions:

Attribution. You must attribute the work in the manner specified by the author or licensor.

Noncommercial. You may not use this work for commercial purposes.

No Derivative Works. You may not alter, transform, or build upon this work.

- For any reuse or distribution, you must make clear to others the license terms of this work.
- Any of these conditions can be waived if you get permission from the copyright holder.

Your fair use and other rights are in no way affected by the above.

This is a human-readable summary of the Legal Code (the full license).

Disclaimer

For the full text of this licence, please go to:
http://creativecommons.org/licenses/by-nc-nd/2.5/

LOUGHBOROUGH
UNIVERSITY OF TECHNOLOGY
LIBRARY

AUTHOR/FILING TITLE

WATERS, D D

ACCESSION/COPY NO.

193409/02

VOL. NO.

CLASS MARK

-6 OCT 1989

20. 6. 96

UNLESS

DATE DUE

-2 SEP 1984

UNLESS RECALLED

LOAN 1 MTH + 2

date due:-

13 JUN 1987

LOAN 1 MTH + 2
UNLESS RECALLED

22 AUG 1988

LOAN 1 MTH + 2
UNLESS RECALLED

date due:-

14 APR 1989

LOAN 3 WKS. + 3
UNLESS RECALLED

019 3409 02

The Technical Institutes in Hong Kong 1969 to 1980: A Study of Their Development

By D.D. Waters

Abstract

This study explores the development of the technical institutes in Hong Kong, from the mid 1960s, when the first one was planned, to August 31, 1980, and places on record some of the experience gained in the process. The thesis includes a short history of technical education in Hong Kong and examines the rapidly changing industrial and social background, and the way in which it affected the technical institutes.

The rate of development in student numbers and build-up of staff has been rapid and these factors, together with the number of female students and the size of classes, are examined and comparisons are made with other countries such as Britain and Singapore. There have also been developments in Hong Kong in areas such as secondary education, higher education, apprenticeships, industrial-training centres, levy schemes, credit-units and handicapped students which have affected the technical institutes and these too are examined. The different types and levels of courses are then reviewed and reasons are given why emphasis has been placed on part-time day studies.

This thesis goes on to examine the standard of education provided in the technical institutes. This is done by analysing attitudes towards technical education, by examining various surveys and by looking at other "indicators of excellence". These include the demand for student places and employment prospects; the views of educationalists, employers, students, parents and the general public; and the recognition of technical institute courses by overseas bodies. The study is reviewed in Chapter 7 and the general conclusion arrived at is that despite the very rapid development of the technical institutes they have provided a satisfactory standard of education which has risen over the years. The Postscript (Chapter 8) looks briefly at important events which have taken place from the end of the period covered in this thesis to February 1982.

THE TECHNICAL INSTITUTES IN HONG KONG 1969 to 1980 :

A STUDY OF THEIR DEVELOPMENT

by

D.D. Waters

A Master's Thesis

Submitted in partial fulfilment of the requirements

for the award of

The Degree of Master of Philosophy of the

University of Loughborough March 1982

© D.D. Waters 1982

Loughborough University
of Technology Library
Date June 82
Class
Acc. No. 193409/02

CONTENTS

		Page
Abstract		I
Acknowledgements		X
List of abbreviations		XI
Glossary		XII
Chapter 1,	INTRODUCTION	1
	Technical institutes and the education system	4
	Brief history of technical education	10
	The economic background	18
	Technical education compared to industrial training	21
	Setting the scene	25
	Conclusions	29
Chapter 2,	THE SETTING UP OF THE TECHNICAL INSTITUTES AND THEIR DEVELOPMENT	32
	Introduction	32
	The Morrison Hill Technical Institute	33
	Additional technical institutes	38
	Student capacity	41
	The Kwun Tong Technical Institute	42
	The Kwai Chung Technical Institute	44
	The Haking Wong Technical Institute	46
	The Lee Wai Lee Technical Institute	48
	The rapid expansion of technical institutes	50
	Female students	63
	Build-up in staff numbers	69
	Class-size	71
	Staff development	74
	Conclusions	80
Chapter 3,	IMPORTANT DEVELOPMENTS WHICH AFFECTED THE TECHNICAL INSTITUTES	82
	Introduction	82
	The rapid expansion of secondary education as it affected the technical institutes	83

Page

The Hong Kong Polytechnic and the technical institutes 93

Links between educational institutions 96

Apprenticeships and the technical institutes 100

Industrial training centres and the technical institutes 109

Credit-units and the Technician Education Council 110

Handicapped students in the technical institutes 116

Conclusions 120

Chapter 4, COURSES RUN IN TECHNICAL INSTITUTES 123

Introduction 123

Ratio of craft to technician courses 124

Disciplines covered and the course structure 131

Full-time courses 135

Evening only courses 137

Short courses 141

Part-time day courses 142

Numbers of students completing courses 155

Conclusions 162

Chapter 5, THE GOVERNANCE OF THE TECHNICAL INSTITUTES 164

Introduction 164

The governance of the technical institutes 164

Conclusions 173

Chapter 6, ATTITUDES TOWARDS TECHNICAL EDUCATION AND STANDARDS OF EDUCATION IN TECHNICAL INSTITUTES 176

Introduction 176

Attitudes towards technical education 177

The demand for student places 187

Recognition of courses by overseas bodies 192

Employment of technical institute graduates 194

The views of students and past-students on the quality of education in technical institutes 199

Page

The views of employers on the education provided in technical institutes 205

Miscellaneous "testimonials" 209

Public-relations 212

Rising standards 215

Conclusions 221

Chapter 7, CONCLUSIONS 224

The future 235

Future research 239

Conclusions 239

Chapter 8, POSTSCRIPT 241

"The Topley Committee" 241

Overall review of education 242

The Vocational Training Council 243

Financing of industrial training 245

The Technical Education and Industrial Training Department 246

Appendices

		Page
1A.	Definitions of the Main Levels of Technical Personnel	248
1B.	Definitions of the Main Levels of Technical Personnel	248
2.	Information about the Proposed Technical Institute at Morrison Hill	249
3.	Specialisms in Technical Institutes as at March 1980	250
4.	Brief Details of Technical Institutes as at 27 August 1980	252
5.	Technical Institutes, Survey of Teachers with Teacher Training Qualifications	253

Bibliography 254

Primary sources 254

Secondary sources 265

Tables

		Page
1.	Data for a Typical Technical Institute at Full Development	11
2.	The Manufacturing Industries	20
3.	Build-up of Student Numbers in Technical Institutes	51
4.	Growth in Technical Institute Student Numbers from 1970/71 to 1979/80	53
5.	Growth in Student Numbers on Non-advanced Courses at Maintained, Assisted and Grant-aided Major Establishments in England and Wales from 1970/71 to 1977/78	53
6.	A Comparison between the 1979 Enrolment Statistics in Singapore and those of Hong Kong in Technical Institutions and Industrial Training Centres	56
7.	Maximum Practicable Capacity of Technical Institutes	59
8.	Numbers of Students, Expressed as a Percentage of the Maximum, Practicable, Day-Student Capacity, as at December 1979	61
9.	Numbers of Female Students in Technical Institutes shown as a Percentage of the Total Student Population	64
10.	Numbers on Roll (as at October 1979) in Technical Institutes (by disciplines)	66
11.	Numbers of Female Students Studying in Technical Institutes in Hong Kong Compared with Numbers of Female Students on Non-advanced Courses in England and Wales	67
12.	Numbers of Staff in Technical Institutes	70
13.	Numbers of Technical Schools and Prevocational Schools, as at November 1979	86
14.	Numbers of Full-time Technical Institute Leavers Continuing their Studies in Various Educational Institutions in 1980	99
15.	Numbers of New Apprenticeship Contracts Signed with the Labour Department	102
16.	Comparison of the Numbers of Registered Apprentices in Designated Trades and the Numbers of Students in Relevant Part-time Day Courses in Technical Institutes	104
17.	Comparison of the Numbers of Registered Apprentices in Non-designated Trades and the Numbers of Students in Relevant Part-time Day Courses in Technical Institutes	105

Tables

		Page
18.	Numbers of Female Apprentices, as at 1 October 1979, Registered with the Labour Department	106
19.	Numbers of Courses in Technical Institutes	127
20.	Numbers of Students at Craft and Technician Levels in Technical Institutes in 1970/71, 1977/78 and 1979/80 by Various Modes of Study	129
21.	Numbers and Percentages of Full-time, Part-time Day and Evening only Students in Technical Institutes in 1970/71, 1977/78 and 1979/80	130
22.	Numbers and Percentages of Students in the Main Disciplines in Technical Institutes and the Numbers and Locations of Departments in each Main Discipline in 1979/80	132
23.	Analysis of Numbers of Form Four and Form Five Students Undertaking Craft Level Courses in the Technical Institutes in 1977/78	149
24.	Reasons Given by Respondents for being "Unwilling" to Sponsor Employees on Part-time Day Courses	151
25.	Throughput Rates of Students in Technical Institutes	157
26.	Views of Form Four and Form Five Grammar School Students on Technical Education	181
27.	Comparison of 1980 Results of Past Polytechnic and Morrison Hill Technical Institute Certificate and Diploma Graduates in the Polytechnic Higher Certificate Examinations in Building Studies	185
28.	Morrison Hill Technical Institute Admission Statistics 1969/70 to 1974/75	188
29.	Technical Institute Admission Statistics 1975/76 to 1979/80	189
30.	Employment of Full-time Technical Institute Graduates	195
31.	Average Wages/Salaries Received by Technical Institute Graduates	196
32.	Starting Pay for Two-year, Full-time Diploma Graduates from the Polytechnic and Technical Institutes	198
33.	Opinions of Students Attending Craft Courses in Technical Institutes	199
34.	Views of Final Year, Part-time Day Release Students on Technical Institute Courses	200

Tables

Page

35. Views of Full-time Technical Institute Graduates on Taking up Employment 202
36. Tracer Study (conducted in 1979) of all Full-time Students who left Morrison Hill Technical Institute in 1973 203
37. Salary Range of Full-time Students who left the Morrison Hill Technical Institute in 1973 204
38. Views of Employers on Vocational Training (sic) in Hong Kong 206
39. Views of Employers on Technical Institute Courses 207

Figures

1. Organisation Chart for Education Department and Technical Education Division 5
2. The Locations of Technical Institutes 13
3. Map of Hong Kong, Kowloon and the New Territories 17
4. Simplified Diagram of Hong Kong's Basic Education Structure, as at 1979/80, showing normal routes 84
5. Basic Course Structure Within Technical Institutes 134

Photographs

The Morrison Hill Technical Institute 34
The Kwun Tong Technical Institute 43
The Kwai Chung Technical Institute 45
The Haking Wong Technical Institute 47
The Lee Wai Lee Technical Institute 49

Acknowledgements

Thanks are extended to many people who supplied information, in some cases verbally, for this thesis and all written sources have been acknowledged in the text. Special thanks are due to the Director of Education for permission to use information contained in Hong Kong Government reports and documents, in the Education Department, and for permission to contact and to discuss these studies with staff and students.[1] As a result, I am especially grateful to my many past colleagues and friends in the Education Department, mainly in the Technical Education Division and the technical institutes, for their assistance and for allowing me to draw freely upon their work. I also wish to acknowledge the help of numerous other people connected with education, training or industry, mainly in Hong Kong but also overseas, either in Government departments or in the private sector. Their assistance has done a great deal to make this study more comprehensive.

Lastly but foremost, thanks are extended to Leonard M. Cantor, Schofield Professor of Education and Head of the Department of Education at Loughborough University. His friendly and constructive criticism together with advice, guidance and enthusiasm were invaluable and did a great deal to bring these studies to a logical conclusion.

In accordance with regulations for higher degrees by research it is hereby stated that I am responsible for the work submitted in this thesis and that the original work is my own, except as specified in acknowledgements, and that neither this thesis nor the original work contained therein has been submitted to this or any other educational institution for a higher degree.

D.D. Waters

---

1. (140)ED(PR)WATER/DD/1 IV (7 January 1980); and note from The Honourable Colvyn Haye, JP. Director of Education (29 July 1981).

LIST OF ABBREVIATIONS

A L I	: Assistant Lecturer I
A L II	: Assistant Lecturer II
A M	: Assistant Master
B R	: Block release
C	: Craft
C M	: Certificated Master
C S E	: Certificate of Secondary Education
E O (T D)	: Education Officer (Technical Division)
F T	: Full-time
G C E	: General Certificate of Education
H O D	: Head of Department
H W T I	: Haking Wong Technical Institute
I T A C	: Industrial Training Advisory Committee
K C T I	: Kwai Chung Technical Institute
K T T I	: Kwun Tong Technical Institute
L (G)	: Lecturer (Graduate)
L W L T I	: Lee Wai Lee Technical Institute
M H T I	: Morrison Hill Technical Institute
P L	: Principal Lecturer
P T D	: Part-time day
P T D R	: Part-time day release
P T E	: Part-time evening
P T I	: Principal, Technical Institute
S E O (T)	: Senior Education Officer (Technical)
S L	: Senior Lecturer
T	: Technician
T E T O C	: Technical Education and Training for Overseas Countries
T I	: Technical Institute
T T C	: Technical Teachers College
U P G C	: University and Polytechnic Grants Committee
V P	: Vice-Principal

GLOSSARY

Aided secondary school	: Operated by a voluntary body and mainly financed by the Government
Assisted private secondary school	: Operated by a voluntary body and in receipt of Government financial recurrent assistance in the form of classroom allowance and supplementation of teachers' salaries
Capital expenditure	: The cost of providing technical institute buildings, furniture and equipment
Craft comparative courses	: Courses in commerce and the service industries of similar standard and level to craft courses in engineering, building and other technical subjects
Government secondary school	: Wholly operated and financed by the Government
Graduate	: Used in the American sense, namely a student who has successfully completed a course in an educational institution; for example, a secondary school, a technical institute or in a university
Post-secondary education	: A form of further education for students who have completed their secondary education in full or in part
Prevocational school	: A type of school offering a three-year post-primary course (from 1981 these schools also offer a five-year course). The curriculum gives equal emphasis to both practical and general subjects. It includes instruction in at least three of the major industrial and commercial subjects. Operated by a voluntary body and mainly financed by the Government
Private independent secondary school	: Operated on a profit-making basis and not in receipt of any Government financial aid
Private non-profit-making secondary school	: Operated by a voluntary body and in receipt of Government recurrent financial aid in the form of a per capita grant for each place bought
Private sector	: Any school other than one in the public sector

Public sector	: Government, aided, and assisted schools, and the 'bought' places in private schools
Recurrent expenditure	: The cost of operating a technical institute
Secondary grammar school	: A school providing a secondary course with emphasis on academic subjects
Secondary modern school	: A school offering a three year general post-primary course. Operated by a voluntary body and mainly financed by the Government. These schools are being transformed into technical schools
Secondary technical school	: A school providing a secondary education with emphasis on science rather than the humanities, and on technical (non-vocational) subjects
Technical education	: Vocationally relevant studies based on the applied sciences and arts and including the various branches of engineering and other technologies, commerce, business and social studies, languages and applied art and design
Technical institute	: A post-secondary educational institution providing vocational courses, both on a full-time and part-time basis, for students at craft and lower technician level in a wide variety of industries and trades
Technician comparative	: Courses in commerce and the service industries of similar standard and level to technician courses and programmes in engineering, building and other technical subjects

The above logo, combining the letters "T" and "I", represents the technical institutes. It also symbolises the Chinese character "工" (kung) meaning industry, technical or work, as well as a girder which is commonly used in engineering and construction.

When dollars are quoted in this thesis, they are, unless otherwise stated, Hong Kong dollars. The Hong Kong dollar has been allowed to float since November 1974, its exchange rate fluctuating according to market conditions. At the end of 1979, the middle market rate was about HK$4.93 to US$1 and HK$11.06 to £1.

"I think Hong Kong's future will be assured when the place has its due quota of technical schools, other advanced means of specialist training and instruction; and when these are accepted as absolutely essential appurtenances, indeed, as parts of the normal capital equipment and overheads of a place which lives by modern industry and commerce. And when there is a general change in the evaluation of personnel and social status; when Hong Kong people no longer hanker for a fixed place in a steadygoing and old-established occupation, but distinguish themselves by developing some entirely new forms of enterprise and livelihood, or by improving and transforming the existing ones."[1]

---

1. Stuart E. Kirby, Professor of Economics, University of Hong Kong, Prospects for Hong Kong and its Business, Far Eastern Economic Review, vol. XIV, no. 21 (21 May 1953), pp.658 to 660 (p.660).

THE TECHNICAL INSTITUTES IN HONG KONG 1969 TO 1980 :

A STUDY OF THEIR DEVELOPMENT

CHAPTER I

INTRODUCTION

This chapter sets out to demonstrate that the education system of Hong Kong differs from that of most other countries and that these differences are largely attributable to its socio-economic background. The chapter then defines the term "technical institute", in the Hong Kong context, and shows how this fits into the education system overall. It then goes on to record briefly the history of technical education in Hong Kong and shows how this developed over the years. It also gives a brief description of the economic background within which the technical institutes have to function.

The technical institutes are owned and run by the Hong Kong Government and have been set up to provide technical education which is directly related to the needs of industry, and which complements industrial training. During the period under review it was the task of industry to provide industrial training, either on or off-the-job, or in specially constructed industrial training centres financed by a levy scheme.

This chapter also "sets the scene" for the technical institutes, commencing in the early 1960s, stating why they were necessary and how this important development took place. This leads on to the opening of the first institute at Morrison Hill in Wanchai, on Hong Kong Island, in September 1970, although it had operated in borrowed premises for the previous academic year. This description should enable the reader to appreciate better the gaps, in the past, in the educational system that the technical institutes are designed to fill.

Like most educational institutions, technical institutes are like icebergs in that only a fraction of the

labour and effort that was required to plan and establish them is visible. To bring them to their present state of development required a great deal of dedication, intelligence and energy by many people working as a team. The institutes have inevitably been affected, to a marked degree, by the personalities that have been involved.

While a number of other emerging countries, such as Singapore and Indonesia, have set up, or are in the process of setting up, a complex of technical institutions similar to the technical institutes in Hong Kong, there appears to be little detailed research material on the subject. Tipton says that the educational field in Britain,

> ... remains only scantly touched by the researcher using an organisational perspective.[1]

She goes on to say that the technical college in Britain has been neglected in this regard even more than have schools and universities. C. Selby Smith also says that the subject has been "strangely neglected".[2] There seems to be an even greater dearth of research material on technical colleges and institutes in developing countries.

It should be possible for other emerging countries to learn from Hong Kong's experience and for them to avoid some of the pitfalls and mistakes that have befallen Hong Kong in the past. It must be emphasised, however, that Hong Kong's socio-economic system is by nature fast-changing and, for this reason, the planning and management procedures for technical institutes there need to be especially sensitive to change and capable of rapid response to industrial needs.

---

1. Beryl E.A. Tipton, Conflict and Change in a Technical College, Brunel Further Education Monograph 6 (London, 1973), p.I.
2. C. Selby Smith, The Costs of Further Education, A British Analysis (England, 1970), p.4.

For example, a leading business man, John Bremridge, who became Financial Secretary for the Hong Kong Government on 1 June 1981, said,

> ... because the advance of Hong Kong is so rapid ... shifts taking up to 20 years in other countries are here concertinaed into five years or less.[1]

A newspaper editorial recorded that,

> Hong Kong must be unique in the industrial world in its ability to switch almost overnight from making, say, wigs to assembling, say, electronic products in the same factory under the same management and with the same key workers.[2]

Professor P.R.C. Williams, of the Institute of Education at the University of London, who came to Hong Kong at the invitation of the Hong Kong Government, to advise on the 1977 Green Paper[3] and the education system said,

> ... one must have sympathy with anybody trying to forecast manpower requirements in a dynamic, continuously adjusting and almost totally unplanned economy such as that of Hong Kong.[4]

Not only is Hong Kong unlike most other countries in this regard, other differences include low taxation and limited interference in the way of government restrictions. It is sometimes assumed, quite wrongly as Williams points out, that all developing countries are following a single development

---

1. John Bremridge, speaking in Rent Control Debate, Legislative Council, Official Report of Proceedings (16 January 1980), p.320.
2. Editorial, The Star (6 September 1977), p.6.
3. Senior Secondary and Tertiary Education a Development Programme for Hong Kong over the next Decade (November 1977).
4. P.R.C. Williams, Manpower Forecasting as a Basis for Educational Planning in Hong Kong, Paper One (14 March 1978), para. 12/6.

path and that countries following in Hong Kong's footsteps will be like Hong Kong in a set number of years from now.[1]

Technical institutes and the education system

Before proceeding further it is desirable to show how the technical institutes fit into the education system and to explain what is meant by the term, "technical institute" in the Hong Kong context. Broadly speaking, schools in Hong Kong are classified either as government, aided or private. Technical institutes, like Government schools, are run by the Education Department of the Hong Kong Government and all full-time staff are civil servants. The Education Department is headed by the Director of Education who is also an ex officio member of the Legislative Council. The Department is divided into six academic divisions each headed by an assistant director. These divisions are Technical Education, Further Education, Schools, Advisory Inspectorate, Services, and Planning and Building. There is also an Administration and an Accounts Division, as well as an Information and Public Relations Section and a Registration Section (See organisation chart at page 5).

The Technical Education Division (which was called Technical Education Branch from 1973 to 1977) is responsible for the planning, coordination, development and administration of vocational type technical education, including the administration of the technical institutes.[2] The Division is headed by the Assistant Director of Education (Technical), who also serves as senior adviser to the Director of Education on all aspects of technical education. The Division is not directly concerned with the Hong Kong University, the Hong Kong Chinese University and the Hong Kong Polytechnic, which are autonomous bodies, but liaison does take place. From

---

1. Williams, op. cit. para. 12(b), and Appendix; and C.E. Beeby, The Quality of Education in Developing Countries, (USA, 1966), p.52.
2. Technical Institutes, Courses 1975 - 1976, a joint institute prospectus, p.2 to 3.

Organisation Chart for Education Department and Technical Education Division

- Director
  - Deputy Director
    - Senior Assistant Director (Planning & Development)
      - Assistant Director (Planning & Building)
        - Central Planning
        - Building Development
        - Statistics
        - Board of Education
        - Post-Form III Places Allocation
      - Assitant Director (Chief Inspector of Schools)
        - Advisory Inspectorate
        - Research
        - Library Services
      - Assistant Director (Further Education)
        - Colleges of Education
        - Approved Post-Secondary Colleges
        - Adult Education
      - Assistant Director (Technical Education)
        - SEO(T)1 — (Administration of Technical (Teachers' College, (Credit-unit system, and (Evening classes.
        - SEO(T)2 — (Technical Institutes planning, (development, operation and (administration.
        - PI(TD) — (Technical education and (vocational training for the (disabled.
        - EO(TD) — (Administrative and (clerical services.
        - P/HWTI — VP/HWTI — EO/HWTI; 5 HoD (C, E, HE, MS, M)
        - P/KCTI — VP/KCTI — EO/KCTI; 5 HoD (Cl, CS, E, M, T)
        - P/KTTI — VP/KTTI — EO/KTTI; 5 HoD (Cl, E, M, P, T)
        - P/LWLTI — VP/LWLTI — EO/LWLTI; 5 HoD (CS, E, CS, HE, M)
        - P/MHTI — VP/MHTI — EO/MTI; 5 HoD (CS, C, E, GS, M)
        - P/TTC — VP/TTC — EO/TTC; Resources Centre Director; 6 HoD (CS, HE, Ed, HS, Engineering, English)
    - Senior Assistant Director (Schools & Services)
      - Assistant Director (Schools)
        - Schools Administration
        - Secondary School Places Allocation
      - Assistant Director (Services)
        - Special Education
        - Educational Television
        - Students & Scholarships
        - Careers
        - Student Guidance
    - Administration Division
    - Accounts Division
    - Information & Public Relations Section
    - Registration Section

June, 1980

(TE) 112/1/1

February 1973 to June 1977 a Deputy Director of Education (Technical) was in post who assumed the role of adviser to the Director of Education on technical education. This post was disbanded when the Education Department was restructured in 1977.

Policy for technical education is formulated in consultation with industry and, while the Technical Division cannot claim to have conducted exhaustive investigations into every aspect of community need, it has consulted a large number of persons, establishments and advisory bodies. Priorities have been set accordingly and this method has generally worked well. However, recommendations have been made that a closer and more direct form of liaison between the institutes and industrialists, on a regional basis, should be implemented.[1] Some of the Diversification Committee members felt that links between the institutes and industry were not close enough and that more could be done. In practice it has not been found necessary for each institute to set up its own advisory committee as this advisory role is filled by the Hong Kong Training Council. The Principals of the institutes are not in favour of setting up separate advisory committees.[2] They feel these would only duplicate the work of the Hong Kong Training Council and that links between institutes and local industry are good.

One of the technical institutes' main formal contacts with industry was formerly the Industrial Training Advisory Committee which was established in 1965.[3] The committee complex, which included a main committee, ten industrial committees and apprenticeship, technical institute and vocational training committees, also acted in an advisory capacity to the technical institutes. The Industrial

---

1. Report, Advisory Committee on Diversification 1979, p.247, para.215; and Summary of Findings of a Survey on Employers' Views on Technical Institute Courses, Hong Kong Training Council (13 November 1978), p.5, para. 8(iii) and (v).
2. Technical Institute/Technical Teachers College, 42nd Policy Committee meeting (3 March 1980), minute 1109.
3. Final Report, Industrial Training Advisory Committee (March 1971), passim.

Training Advisory Committee (ITAC) was replaced by the Hong Kong Training Council in October 1973.[1] The latter was established by His Excellency the Governor to advise him on measures to ensure that there is a comprehensive system of manpower training geared to the developing needs of Hong Kong's economy. It also serves in an advisory capacity to the technical institutes. A proposal had, however, been made by the Training Council that it be transformed into a statutory Industrial Training Authority, but as at August 1980 no final decision had been made.[2] Such an organisation would be a body corporate and would be able to sue employers who would not cooperate in levy schemes. It would also be able to employ staff and run training centres, conduct trade-testing and manpower research and planning. In other words, it would be a more powerful body than the Training Council.

Before proceeding further it is necessary clearly to understand what is meant by the term "technical institute" in the Hong Kong context. A typical definition is :

> A post-secondary institution providing vocational courses, both on a full-time and a part-time basis for students at craft and lower technician level in a wide variety of industries and trades.[3] (See Appendix 1A for definition of craftsmen and technicians).

Technical Institutes are not an exact copy of an educational system in any other part of the world.[4] The main purpose of the Government run technical institutes is

---

1. 6th Report, Hong Kong Training Council, April 1979 to March 1980, passim.
2. Report, Advisory Committee on Diversification 1979, pp. 244 and 245, paras. 411 and 412.
3. Secondary Education in Hong Kong over the Next Decade, (16 October 1974), p.26(31).
4. D.D. Waters, A Series of Papers on the Planning, Establishing and Running of Technical Institutes in Hong Kong, Paper One-General (September 1972), p.1, para.1.1.

to provide craft and technician education to complement the training, either on or off-the-job which is the responsibility of industry. They provide a wide range of courses and facilities for industry, commerce and the service sectors.

A technical institute provides courses which are fully vocational and, while some Preliminary and General courses are run on a part-time basis, their purpose is solely to raise the general education standard of a student so that he (or she) may later join a craft or a technician course. Technical institutes do not duplicate the functions of the secondary technical schools which provide a full-time secondary course with a technical (non-vocational) bias. Nor is the technical institute similar to the prevocational school which provides a general education course consisting of 50 to 60 per cent of general education and 40 to 50 per cent of technical education.

The nearest equivalents to the technical institutes, in Britain, are the colleges of further education and the technical colleges, except the technical institutes, in Hong Kong, do not run higher technician, GCE, CSE, or equivalent courses.[1] Nor do they run recreational type courses. The institutes were set up, primarily, to provide technical education for craftsmen and, over the years, concern has been expressed that they would depart from this role.[2] For this reason there has been some resistance, by the Education Department, to the institutes running general education courses or the running of too many technician courses.[3] For example, the 1977 Working Party, which was chaired by the Director of Education, stated that :

> The principal role of the technical institutes is to produce craftsmen and nothing is to be done to divert them from

---

1. J. Hicks, The Planning of Further and Higher Education, Vocational Aspects of Education (Autumn 1975).
2. Report on Diversification, op. cit. p.231, para. 383.
3. Working Party Report on Senior Secondary and Tertiary Education (May 1977), p.55, para. 4.27.

> that essential task .... The importance of the contribution made by the craftsman to the economy can hardly be over-emphasised, and indeed, is so clear that emphasis should not be required.[1]

For this reason, at one stage, an overall 80/20 ratio was imposed, meaning that for every 20 technician students in technical institutes (by headcount) there should be 80 craft students. This was spelled out in the 1977 Green Paper as follows :

> About 80 per cent of the day-time places on technically based courses will be at the craft level, with courses at the technician level being provided mainly in the Polytechnic.[2]

The reason for this recommendation was because it was felt, at the time, that there were spare accommodation and resources at the Polytechnic. The 80/20 ratio was not popular with staff in the technical institutes as they felt the status of the institutes was being eroded by reducing the number of higher level courses. It was also apparent that a mistaken recommendation had been made because, in the following year, the 1978 White Paper (which followed on from the Green Paper) made provision for some of the technician courses to be transferred from the Polytechnic to the technical institutes in the early 1980s. (These transfers commenced in September 1981). This was done in order that the Polytechnic could concentrate more on higher level work, including the possibility of running some degree programmes.[3] The 80/20 ratio was thus in force for less than one academic year; it had been introduced in 1977.

---

1. Ibid. p.48, para. 4.27.
2. Senior Secondary and Tertiary Education A Development Programme For Hong Kong Over The Next Decade (November 1977), p.26, para. 7.2.
3. The Development of Senior Secondary and Tertiary Education (October 1978), p.16, paras. 6.8 and 6.9.

The aims and objectives of the technical institutes as laid down in 1976, which remained as broad policy for the rest of the period under review in this thesis, were as follows.[1] The technical institutes provide courses on a full-time, sandwich, block-release, part-time day release, part-time evening and short course basis, in the following areas (which are in broad priority order). Firstly, there are courses for technician and craft apprentices mainly in the part-time day mode of study. These are followed by basic-craft courses for Form-Three leavers and basic-technician courses for Form-Five leavers, as well as advanced craft courses and post-experience specialist, up-dating and retraining courses, including supervisory studies. Thirdly, there are courses in a significant and increasingly diversified role for the young as well as for mature persons many of whom may have returned to an educational institution for a "second chance" (The latter group of courses includes Preliminary and General courses). Lastly, there are bridging (technical) courses for students, who have not the pre-requisite qualifications for direct entry to the Polytechnic, as well as pre-technical courses for Form-Three leavers. No special mention was made, in 1976, of handicapped students as no real effort was taken to integrate them into normal institute classes until the start of the 1979/80 academic year. Brief details of a typical technical institute may be seen at Table 1.

Brief history of technical education

During the Governorship of Sir Matthew Nathan (1904 to 1907) interest in elementary technical education began to show.[2] This culminated in the founding of the Technical Institute in 1907. This is apparently the first record of any technical education in Hong Kong.[3] It must be made

---

1. D.D. Waters, The Future Role of Technical Institutes (2 September 1976), Appendix 9.
2. T.C. Cheng, The Education of Overseas Chinese : A Comparative Study of Hong Kong, Singapore and the East Indies (University of London MA. thesis, 1949), p.141.
3. Imperial Education Conference Papers, Education Systems of the Chief Colonies not possessing responsible Governments (Hong Kong, 1914), p.5.

Table 1 : Data for a Typical Technical Institute at Full Development

(Note : Figures are approximate)

Item	Typical technical institute	Remarks
1. Project expenditure	Building : $19 million Equipment and furniture : $9.6 million	Based on those for Lee Wai Lee Technical Institute.
2. Full-time teaching staff	86 in number; total annual midpoint salary about $5.2 million.	In 1979/80, the provision for Kwun Tong Technical Institute was for 89 per cent of full development. It had 76 teaching staff whose annual salary at mid-point was $4.7 million.
3. Full-time support staff	67 in number; total annual midpoint salary about $1.3 million.	Kwun Tong Technical Institute had 59 support staff for 1979/80. Total salary for support staff was about 25 per cent of that for teaching staff.
4. Part-time teaching staff	About 250 in number; total annual temporary staff fees required about $1.5 million.	$5.4 million (including adjustment for full year cost for Lee Wai Lee Technical Institute) was needed for providing 14,700 places. Full development was assumed to be 20,000 places in five technical institutes.
5. Other items under "other charges"	About $1.2 million of which about 80 per cent is for stores and equipment.	Based on present level of provision.
6. Number of courses	Full-time : 15 Part-time Day : 25 Part-time Evening : 30	
7. Number of classes	Full-time : 24 Part-time Day : 70 Part-time Evening : 100	Full development assumed to be 38 full-time equivalent classes.
8. Number of full-time students	900	Classes about 95 per cent full.
9. Number of part-time students	Part-time Day : 2,400 Part-time Evening : 3,800	Part-time Day classes about 85 per cent full. Part-time Evening classes about 95 per cent full.
10. Number of post Form Five students	Full-time : 500 Part-time Day : 600 Part-time Evening : 1,600	

Ref. (TE) 124/3 (April 1980)
(TE) 110/21 (April 1980)

clear here, however, that this Institute was entirely different from the technical institutes which are in operation in Hong Kong today and which form the subject of this thesis. The Technical Institute, which was established in 1907, formed a sub-department under the Director of Education. It had no buildings of its own but was housed at Queen's College, a secondary school, situated on Hong Kong Island. In 1913, it entered 161 candidates for local examinations, of whom 116 passed. Subjects examined included shorthand, sanitation, building construction and field surveying.[1]

The development of technical education was slow, however in 1926, the Salesian Fathers established classes in shoemaking, carpentry, tailoring and printing; at about the same time, Taikoo Dockyard opened evening classes in technical subjects for their apprentices.[2] These evening classes were later taken over by the Education Department, under the supervision of the Principal of the Trade School, which was known from 1947 to July 1972 as the Technical College.

A positive step was taken by the Hong Kong Government towards the development of technical education, in 1931, when a committee was formed to report on the possibility of introducing a system of practical education in the Crown Colony.[3] This Committee, under the chairmanship of Sir William Hornell, made three recommendations. These were, the establishment of a junior technical school, the provision of evening classes for apprentices and the commencement of full-time classes at a later date. As a result in 1932, the Junior Technical School, which became the Victoria (Secondary) Technical School (VTS) in 1957, was established. This was the Government's first venture into full-time technical

---

1. Ibid. pp.27 and 28.
2. Watt Hoi-kee, Technical Education in Hong Kong Today, Appendix I (undated), p.26 (c. 1964).
3. Opening Ceremony New Technical College (booklet), (2 December 1957), p.3.

FIGURE 2 : THE LOCATIONS OF TECHNICAL INSTITUTES

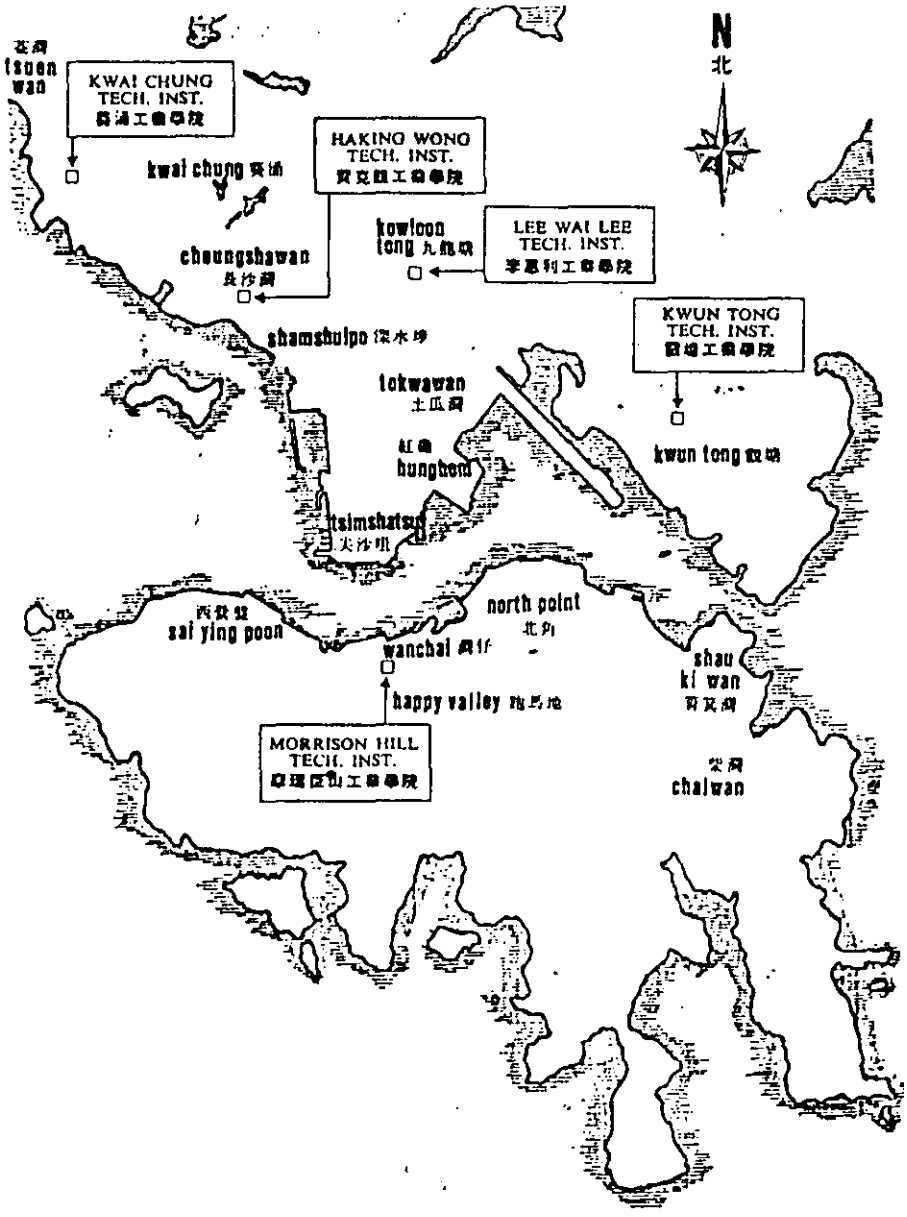

education. The Junior Technical School (JTS) was a secondary school but provided a comparatively narrow, four-year course, the curriculum being designed mainly as pre-apprentice training for the engineering trades.

Further progress was made in 1935 when the Salesian Society founded the Aberdeen Trade School.[1] This provided a general education, together with a type of training considered comparable to an apprenticeship, within a trade school. The School was converted into a secondary technical school in the late 1950s. Meanwhile the Far East Flying Training School (the original name) commenced the training of pilots and engineers for civil aviation in 1934.[2] This was, and still is at the time of writing, a private institution.[3]

The first Government, post-secondary, technical institution was the Trade School which opened in Wood Road, Wanchai, on Hong Kong Island, in 1937, on a site adjacent to that on which the Morrison Hill Technical Institute now stands. At the time of opening it ran courses in building construction, mechanical engineering and marine-wireless operating.[4] Thus, when the Pacific War broke out in 1941, technical education was being provided at secondary, trade-school and post-secondary levels, but not on a large scale. For example, there were about 200 full-time students attending post-secondary courses at the Trade School.[5] The Trade School did not receive great support from employers except from the dockyards and the Building Contractors' Association.

After World War Two the Trade school (then renamed the Technical College), the Junior Technical School, the Aberdeen Trade School and a number of centres running evening

---

1. Aberdeen Technical School 1935 - 1965, 30th Anniversary Souvenir Number.
2. Far East Flying and Technical School Ltd (prospectus) (undated).
3. Monica Yeung, Air-minded men who never get off the ground, Hong Kong Standard (15 September 1974), p.19.
4. Hong Kong Technical College 1970 - 71, prospectus p.1.
5. Information given verbally by pre-war Trade School student.

classes in technical subjects reopened in 1947, and were soon working at pre-war capacity. To this group of educational institutions was added the Tang King-po Secondary School, in Kowloon, in 1953. For many years this school had a trade school section which ran classes in printing, shoemaking and tailoring.[1] This trade school section was phased out in the late 1970s. A number of private, technical and commercial education institutions, many of which are profit-making, have also operated over the years. In 1978 there were about 41 such institutions many of which ran courses in the evenings.[2]

An increasing population and rising standards of prosperity gave impetus to the growth of technical education and, in 1953, an extra storey was added to the old technical college building in Wood Road, Wanchai. In 1953, the Technical Education Investigating Committee reported that a technical college in Kowloon, on the other side of the harbour, was essential.[3] The Chinese Manufacturers' Association offered to donate one million dollars towards a new college if the Government would donate a similar sum and provide a site. The Government accepted the offer and the new College was opened in 1957.[4] In the 1947/48 academic year there were 25 full-time and 599 part-time students on roll. By the time the College moved to Kowloon these figures had increased to 345 full-time and 5,532 part-time students.[5] With the help of donations the Technical College expanded rapidly. New buildings were added which included a hall, a dyeing and finishing block, a new electrical laboratory, another workshop block (which included construction as well as electrical and mechanical trades), and a heavy-current

---

1. Tang King-po School Speech Day and Prize-giving (brochure) (19 November 1976).
2. Education Department records.
3. Technical Education Investigating Committee, Report on Technical Education and Vocational Training in Hong Kong (30 October 1953).
4. Opening Ceremony of the Polytechnic's First New Building, (brochure) (26 October 1976), p.1.
5. Opening Ceremony of the New Technical College (2 December 1957), last page.

workshop as well as a library, a textile workshop block and a new classroom wing. During the 1960s, the Technical College was mainly preoccupied with technician level courses but it also did some work at technologist level and a limited amount of work at craft level.

The Principal and senior staff of the College had always felt that a technical institution was required which would concentrate on craft level work. This is one of the main reasons why the first technical institute came into being. Towards the end of the 1960s it was apparent that facilities at the Technical College were not going to be able to provide sufficient technical education for the manpower needed for Hong Kong's industries. It was decided therefore, not only to build a technical institute, but also to upgrade the Technical College to become a polytechnic.[1] The Hong Kong Polytechnic was formally established on 1 August 1972. Further details of the Polytechnic and its links with the technical institutes are given commencing on page 93.

Since World War Two a number of secondary technical schools and secondary modern schools have been established. The latter have been or, at the time of writing, are in the process of being phased out to become secondary technical schools.[2] In the late 1960s and the 1970s a number of prevocational schools were also established, either as new institutions or by converting vocational training centres. While the prevocational schools do have close links with the technical institutes none of the above types of schools are dealt with in this brief history of technical education as they are all considered to be part of the general-education system. While these schools do include technical subjects in the curricula they are generally taught with a non-vocational

---

1. Opening Ceremony of the Polytechnic's First New Building, loc. cit.
2. D.D. Waters, The Development of Technical Education in Hong Kong and Opportunities for Prevocational School leavers, paper presented at Induction Course for Newly Appointed Teachers in Prevocational Schools (30 August 1979), pp.17 and 18.

Figure 3

CHINA
DEEP BAY
MIRS BAY
NEW TERRITORIES
KOWLOON
HONG KONG
Lantau Island
TAI PO
TOLO HARBOUR
TOLO CHANNEL
PORT SHELTER
VICTORIA HARBOUR
WEST LAMMA CHANNEL
EAST LAMMA CHANNEL
TUEN MUN
YUEN LONG
SHAM TSENG
TSUEN WAN
KWAI CHUNG
SHA TIN
SAI KUNG
TAI O
Po Toi Group
Ninepin Group
Tap Mun
Ping Chau
Cheung Chau
Lamma Island
Soko Islands
LEGEND
Built-up Area
Ferry Route
Main Road
Country Park
Secondary Road
Cultivation
Railway (underground)
100 metres contour interval with supplementary contour at 50 metres.
Scale 1:200 000
km 0 2 4 6 8 10 12 14 km
Series HM200C
Edition 5 1981
Cartography by Lands & Survey Department PWD
© Hong Kong Government
HONG KONG, KOWLOON &
THE NEW TERRITORIES

bias. Further information on these schools and their links with the technical institutes is given in Chapter Three.

The economic background

Hong Kong is located on the south-eastern shore of China near the mouth of the Pearl River in Guangdong (Kwang Tung) Province.[1] It is 1061 square kilometres in area including the New Territories and the outlying islands. Hong Kong Island has been a British Colony since 1841. The Kowloon Peninsula, as far as Boundary Street, as well as Stonecutters Island, were ceded in 1860 and the New Territories, together with the 235 islands, were leased to Britain in 1898 for 99 years. About 98 per cent of the population can be described as Chinese and the two per cent non-Chinese are from other countries in Asia, Europe, America and Australia. About 57 per cent of the population are Hong Kong born.

Hong Kong's population in 1947 numbered 1,750,000. By the time the first technical institute was established, in 1969, this had increased to 3,863,900. At the end of June 1980, the population was 5,067,900. This figure included 38,722 illegal immigrants. Since World War Two, Hong Kong's economic structure has undergone a dramatic transformation, from entrepôt trade to light manfacturing principally concerned with exports.[2] As the Governor said,

> ... the story of Hong Kong is the story of the response of its people to the challenge of a population increase from 600,000 after the war to nearly five million today - a challenge which has had to be met with no natural resources except a harbour, and no aid at all.

He described Hong Kong as one of the most thriving and dynamic communities in the world which had increased its gross domestic

---

1. Information obtained from various Hong Kong Government Year Books.
2. Sir Murray MacLehose, speech at opening of annual British Medical Association conference in Hong Kong, South China Morning Post (2 November 1979).

product by 130 per cent, in the past decade (1969 to 1979), in real (not money) terms. During the same period, expenditure increased by 170 per cent.

The 1950s have been described as the "formative years" of industry, the 1960s as the "growth decade" and the 1970s as the "maturing years".[1] The export-oriented manufacturing industries have contributed a great deal to the economy and, in 1977, 43 per cent of the economically active population were engaged in them. This could be compared with 37 per cent in West Germany, 36 per cent in Britain, 27 per cent in France and Japan and 23 per cent in the USA.[2]

A leading industrialist and one time Legislative Councillor once said,

> No (other) country has increased its domestic exports of industrial goods to more than ten-fold in 16 years; no country has ever doubled its population in 25 years and still provided a continuously improving standard of living for its people.[3]

Some indication of the build-up of the manufacturing industries may be seen in Table 2.

---

1. S.Y. Chung (now Sir), Hong Kong's Fight Against Adversity, Hong Kong Industrial News (12 January 1977), pp. 1 and 4.
2. Ibid.
3. James M.H. Wu, A Short Cut to Rome, speech at Rotary Club, Hong Kong Island East (19 January 1977).

Table 2 : The Manufacturing Industries

	1960	1970	1975	1976	1977	1978	1979
(a) Number of Factories	4,780	16,507	31,034	36,303	37,568	39,606	42,282
(b) Labour Force	216,000	549,178	678,857	773,746	755,108	800,026	870,898
(c) Domestic Exports (HK$ million.)	2,867	12,347	22,859	32,629	35,004	40,711	55,912
(d) Output Labour HK$ ((c) ÷ (b))	13,273	22,483	33,673	42,170	46,356	50,887	64,200
(e) Productivity Index	100	169	254	318	349	383	484
(f) Average Factory Size ((b) ÷ (a))	45	33	22	21	20	20	21

Source : Hong Kong Annual and Monthly Digest of Statistics, and other information supplied by The Census and Statistics Department, Hong Kong Government. All figures are as at December in each year.

As at September 1979, the total labour force numbered 2,119,000.[1] The 1970s saw the emergence of the service industries and, as at December 1979, there were 870,898 persons engaged in manufacturing. The largest industries were wearing apparel (excluding footwear) and textiles with 277,270 and 100,825 employees respectively. The construction industry employed 81,879, while the wholesale, retail and import/export trades, restaurants and hotel workers numbered 418,649. In turn, there were 113,389 engaged in finance, insurance, real estate and business services, and 158,838 employed in community, social and personal services. Government servants numbered 127,344.

Technical education compared to industrial training

It has already been stated that the main task of a technical institute is to provide technical education which is related to the needs of industry. However, industry itself is responsible for providing industrial training.[2] There is a certain amount of confusion in Hong Kong, and indeed often elsewhere, as to what is meant by the two terms, "industrial training" and "technical education". While there is some overlapping the two are not synonymous.[3] Industrial training tends to be "narrower", more job-specific and with a shorter term approach, although the developing concept of training is, or should be, that it is a continuous operation. It generally has the firm in mind rather than the individual trainee or the community at large. Training is, in other words, not generally concerned with the "whole man". Industrial training in Hong Kong is normally on-the-job but can be institutional. The Construction Industry Training Centre and the Clothing Industry Training Centre are typical examples. (See Chapter 3).

---

1. Figures obtained from Census and Statistics Department, Hong Kong Government.
2. Final Report, Industrial Training Advisory Committee, (March 1971), p.12 to 13, paras. 3.15 to 3.17.
3. D.D. Waters, Education for Industry, paper presented to Christian Employers' Association Annual Seminar (28 November 1970), pp. 3 to 6.

Technical education is much broader than industrial training and generally has long-term personal development in mind. It also has a higher theoretical content. It considers the benefits to both the individual and to the community at large rather than "training" a person to carry out a specific task for the benefit of a particular firm. Technical education should, however, as far as possible, be properly integrated with industrial training.[1] In other words, the objectives of the two are not mutually exclusive and they should be recognised as complementary aspects of a common aim.

The policy of the Hong Kong Government was defined by the now defunct Industrial Training Advisory Committee which stated that industry must accept the full cost of providing practical training, while the Government is responsible for providing the institutional training (ie. in technical institutes and the Polytechnic) necessary for the organised teaching of theoretical knowledge, at all levels, and such practical training as is necessary to illustrate the theory.[2]

It must also be stated here that technical institutes have been established by Government to provide technical education for craftsmen and technicians. Institutes do not generally provide courses for operatives (See Appendix 1B for definition). The training of operatives, even if the job includes some theoretical content, is the task of industry; advice may, however, be given by the Government Department of Labour.[3] While some exceptions have been made because of acute demand (for example, the Housing Caretakers course which was first run by the Technical College and later by the Morrison Hill Technical Institute), the division would seem sensible bearing in mind the type of work and the fact that accommodation for technical education is in comparatively short supply. Technological education is provided by the

---

1. Ibid.
2. Final Report, Industrial Training Advisory Committee, loc. cit.
3. Ibid. p.91, para. 2(a).

Polytechnic and the two universities.

The rigid demarcation between technical education and training, as is the policy in Hong Kong, is also common in a number of western countries.[1] In Britain, for example, industrial training is generally the responsibility of the industrial training boards; in many cases these are financed by a levy imposed on industry. If industrial training is provided in a college of further education in Britain, then this is normally done, for industry, on a full-cost basis. In communist countries the position is different and both technical education and industrial training, like most other things which are needed on a large scale, are provided by the state and, in many cases, technical/trade schools are attached to factories so that "production training" can easily be provided for the students.[2]

In Singapore however, the situation is different again.[3] There, there are no separate definitions for what constitutes training and education (particularly complementary education) and these functions overlap. They are provided partially or wholly by the following bodies, all set up as statutory boards: the vocational and Industrial Training Board, the Economic Development Board, the Public Utilities Board, the Singapore Polytechnic the Ngee Ann Technical College, and the University of Singapore.

The Vocational and Industrial Training Board Act, 1979, was passed by the Parliament of Singapore, with the People's Action Party in power, on 5 March 1979. It was brought into force on 1 April 1979. At the time it was felt that for a person outside the formal education system, vocational development, including industrial training and continuing education, represented one process of self-improvement

---

1. Report on Diversification, op. cit. p.219, para. 358.
2. D.D. Waters, Technical Education and Industrial Training in the USSR, Industrial Training International, volume 3, number 12 (England, December 1968),pp.565 to 574 (p.570).
3. Robert Bray and Leung Kam-fong, Report on a Study Tour to Singapore, 25 May 1980 to 7 June 1980, p.41, para. 2.15.

directed at enhancing his occupational prospects.[1]

Vocational training and continuing education are, therefore, best provided by one authority.[2] In this way, coordination would be improved and maximum utilisation made of resources. In many developing countries where industry is not properly developed, it is often not possible for it to provide adequate industrial training as it lacks know-how and resources and some form of assistance from the government is sometimes necessary. Hong Kong has recently been reviewing the position and the Advisory Committee on Diversification, which was appointed by the Governor and chaired by the Financial Secretary, Sir Philip Haddon-Cave, in 1979 accepted the Hong Kong Training Council's proposal that a properly planned and expanded system of training was necessary.[3] The Committee also recommended that, all training be financed from general revenue. As at 31 August 1980, this proposal was still being investigated by the Government.

The reason for this recommendation was that it was felt, while up to 1980, only two industries, namely construction and clothing, had imposed levy schemes, a proposal had been made by the Hong Kong Training Council for a general levy to be imposed on industry as a whole. The Diversification Committee considered it undesirable to expand industrial training by a proliferation of individual levies. At the same time, the Financial Secretary was not in favour of hypothecated revenue where money was collected outside the public purse.

It was also felt, by the Diversification Committee, that it would be difficult to impose a levy fairly on all types of industries.[4] An ad valorem levy of 0.025 per cent on the declared value of both imports and exports had been

---

1. The Vocational and Industrial Training Board, (booklet) (Singapore, undated), p.2.
2. Ibid.
3. Report on Diversification, op. cit. p.240 to 244.
4. Ibid.

proposed by the Hong Kong Training Council. Some industries, however, for example construction, do not export and some industries are only involved in imports to a limited degree. Taking another, jewellery manufacturing for example, the amount of value added is small compared with the cost of the imported raw materials and the price of the exported finished products, on both of which the levy would be payable. It is agreed it is more difficult to organise training in such a way as to enable several industrial schemes to share common facilities and to hold down their capital and recurrent costs. If, however, industrial training is to be financed from general revenue then some assurance needs to be obtained, from the Government, that sufficient funds would be forthcoming (as would happen if a levy were imposed by industry). Also there is a danger that, if the Government is involved, the system will be less flexible and unwelcome delays in decision-making will occur.

Setting the scene

For a number of years it had been said by several people, for example staff of the previous Technical College and by industrialists, that a technical college was required both in Kowloon and on Hong Kong Island. The idea for a second college was given impetus by a donation of $6 million (increased in 1969 to $7 million) to establish a technical "school" on Hong Kong Island.[1] Every year the Royal Hong Kong Jockey Club donates money to worthy causes and Government departments are invited to put in "bids". The request was made for the money by the Director of Education on the advice of his senior staff. The Jockey Club donation included $4 million for the building and $3 million for the equipment. The Director of Education at the time, W.D. Gregg, who was advised by Watt Hoi-kee, the Principal of the Technical College, was in favour of a "technical college" on the Island although, at this stage, the timing was undecided.

---

1. The Morrison Hill Technical Institute (prospectus) third edition, p.2.

As a result, Watt made a formal proposal that,

> ... Technical education and vocational training in Hong Kong is now entering a further stage of development. In addition to the facilities for training technicians and technologists now provided at the Technical College, Government will be expected to provide more facilities for trade and vocational training .... Although some pilot ... craft training in building, electrical and engineering trades will be offered in September 1964 (at the Technical College), such courses are of an experimental nature in order to assess the workability of this type of training. If these courses prove successful, a separate institution (Morrison Hill Technical Institute) should be provided ....[1]

Meanwhile the lack of technical education facilities had become cause for greater concern by industry and some educationalists. The Principal of the Technical College, who drew up the first written proposal for the new Technical Institute,[2] and who did most of the preliminary planning, wrote :

> ... the early establishment of a technical institute ... to supplement the training facilities of the Technical College may become justified.[3]

This did not appear to be a very positive statement. He was, of course, a Government servant and the taxpayers'

---

1. Proposal of a Technical Institute, Revised (March 1964), Appendix A, p.1.
2. Ibid.
3. Memorandum, Principal, Technical College to Director of Education, TC 10059 (II) (15 May 1964).

money would finance the recurrent cost of the project on completion. With the benefit of hindsight, however, it would appear he was being over-cautious.

In turn, S. Mackey, Taikoo Professor of Engineering at the University of Hong Kong, underlined the inadequacies of the existing training to meet the demand for leadership and for technological skills in industry, if industrial expansion was to continue and if satisfactory employment levels were to be achieved for the Colony's growing population.[1] The Honourable Sir Sik-nin Chau, a banker, then Chairman of the Hong Kong Management Association, made a similar plea and called for more accommodation and facilities for training technical personnel.[2] Similar thoughts were also expressed in professional journals.[3] At a discussion in the Education Department on the 7th April 1964, a note of caution was sounded. It was agreed that the advice of the Advisory Committee, at the Technical College, to reduce the number of preapprentice classes from six to three, planned to commence in September 1964, should be accepted.[4] It was also felt that the preapprentice courses should not be separated from the issue of the proposed new technical institute, and that unless these courses were well supported by industry, at the Technical College, there was little point in establishing a technical institute, at Morrison Hill, which would concentrate largely on similar courses. It was therefore decided that the new institute should not be included in the 1965/66 estimates and the matter would be reconsidered when the success of the three preapprentice courses was known, which might be in April 1965. In a letter to Watt Hoi-kee, Principal of the Technical College, P.C.M. Sedgewick, then Commissioner for Labour, supported the proposal for a technical institute.[5]

---

1. Professor Sean Mackey, 9th meeting of Working Committee on Productivity (22 April 1964), para. (2)v of minutes.
2. Sir Sik-nin Chau, address, Annual General Meeting, Federation of Hong Kong Industries (8 May 1964).
3. D.D. Waters, Problems Met in the Training of Technicians in Hong Kong, Hong Kong Manager, volume 1, no.2 (March/April 1965), pp.22 to 27.
4. ED4605/54 (7 April 1964).
5. 28966 SCH/TEC/HK II, (13 May 1964), para. 5.

It can be seen from the above examples that there was considerable support for the expansion of technical education in the mid 1960s and for a technical institute to be established on Hong Kong Island. The Education Department however, understandably, wanted to make absolutely sure of the necessary support from industry. It was, after all, the tax-payers' money that was being spent. It would have looked bad if, after the new Morrison Hill institute opened, support to sponsor students on courses, by industry, was not forthcoming. The schedule of accommodation and the basic proposals for the new institute were eventually approved on 30 December 1965.[1]

The original aims and objectives for the first institute may be seen at Appendix 2.[2] These are not too dissimilar to the aims and objectives of technical institutes today (see page 10), except that the Department of Technical Teacher and Workshop Instructor Training was transferred to form the nucleus of the new Technical Teachers College, when this was established in September 1974.[3]

In addition to the disciplines at present being run at Morrison Hill (see Appendix 3), courses were also originally proposed for laboratory technicians (including food-processing and industrial chemistry) and for hotel and catering.[4] It was later decided that the laboratory technicians course should be run instead at the then Technical College (and later still at the Polytechnic) and not at the new institute. In addition to full-time classes, sandwich and part-time day classes were proposed in a number of disciplines.[5] The site for the first institute was selected in March 1965 and site formation commenced in July 1966.[6] The site had been used as a granite quarry for the

---

1. BL2/1976/64CS (30 December 1965).
2. Ibid.
3. Technical Education in Hong Kong, Handbook for the Technical Education Branch, issue no.1 (September 1976), p.9.
4. Proposal of a Technical Institute, 2/6692/64I (September 1964), revised, p.2.
5. Ibid. p.2 and 3.
6. D.D. Waters, A Series of Papers on the Planning, Establishing and Running of Technical Institutes in Hong Kong, Paper Three - Buildings (November 1972), p.4.

best part of living memory and piling was not necessary. The Government was very cost-conscious on the project and the balcony in the assembly-hall, which is also used for physical education, examinations and for concerts and a variety of social functions, was deleted at planning stage.[1] This represented a saving of $35,000 or about 1.5 per cent of the contract price. This deletion was a pity as it would have considerably increased the seating capacity of the hall. The new building at Morrison Hill was partially completed and handed over by the Government Public Works Department, to the Education Department, on 30 June 1970. A skeleton staff moved in on the 4 July and the final handing over took place on 22 August 1970.[2] This was about one year later than the originally planned completion date of the building contract.

The first of the new institutes was thus established in its new building. This provided a relatively new type of education for Hong Kong with emphasis on craft level work, especially in the part-time day mode of study.[3] The additional four institutes, which have since been established, are all run on similar lines to the Morrison Hill Technical Institute. All institutes have been built to accommodate between 1,300 and 1,500 full-time equivalent day students, at one sitting depending on the type of courses run (see Appendix 4).

Conclusions

The free structure of the Hong Kong economy, which has a low rate of tax, is unlike most other countries. It has changed out of all recognition between the end of World War Two and 31 August 1980; from an entrepôt to a dependence on manufacturing, to the emergence of service industries.[4]

---

1. BL2/1976/64 (30 December 1965).
2. Waters, A Series of Papers ... Paper One - General, op. cit. p.3, para. 2.1; and Paper Three - Buildings, op. cit. p.4, para. 7.3.
3. D.D. Waters, Gearing Training to needs of Industry, Times Educational Supplement (London, 6 January 1978).
4. Sir Philip Haddon-Cave, Financial Secretary, The Changing Structure of the Hong Kong Economy, paper read to the XXII Association Cambiste Internationale Congress in Singapore (6 June 1980), p.30, para. 79.

Such considerations as these, as well as culture and social customs, must be borne in mind when planning an education system.

The aims and objectives of technical institutes have not changed, to any marked degree, over the years (cf. page 10 and Appendix 2). While major changes have been suggested in the past, for example that non-vocational courses (such as hobbies and recreational courses) or general education courses (for example,courses leading to the Hong Kong Certificate of Education) should be run, these suggestions have always been turned down (see page 140). The institutes have concentrated on craft courses and, as second priority, technician courses with emphasis on the part-time day mode of study. While no educational institution can stand still, it appears that the aims and objectives have stood the test of time and have proved themselves to be generally correct, bearing in mind the limited facilities available.

Technical education got off to a slow start and limited progress was made up to World War Two. While the Technical College expanded rapidly in the 1960s, the real development of technical education did not commence until the 1970s, after the first technical institute had been established in its new premises and with the founding of the Polytechnic and four more institutes.

The decision, taken in the late 1950s, that secondary schools should not undertake vocational type studies (eg. Aberdeen Technical School and the Junior Technical School) was probably correct. Most secondary schools, in Hong Kong, are not equipped to teach such subjects and, it was felt, that such work should be undertaken by the old Technical College, now the Polytechnic, and the technical institutes. However, the possible introduction of linked courses into technical institutes (see page 90) may represent a change of attitude. If and when these courses are introduced, however, they will be run in institutions (technical institutes) which are properly equipped for the purpose and selected students from secondary schools will, no doubt, attend.

The terms "technical education" and "industrial

training", in Hong Kong, basically mean the same as in Britain and a similar policy was in force, during the period under review, with the Hong Kong Government being responsible for technical education and industry being responsible for both providing and financing industrial training. This policy appears to have worked well in the past and, while in the 1960s and the 1970s the Government was not prepared to finance industrial training, on the recommendation of the Committee on Diversification, the position was being reviewed as at 31 August 1980.

CHAPTER 2

THE SETTING UP OF THE TECHNICAL INSTITUTES AND THEIR DEVELOPMENT

Introduction

After it had been established in September 1969, the Morrison Hill Technical Institute expanded rapidly in student numbers and it was not long before an additional floor was needed. From this response for places, and from figures provided by manpower surveys, there was sufficient evidence to show that additional technical institutes were required.[1] Four more technical institutes had been proposed by the Industrial Training Advisory Committee. Of these four, two were set up at the same time, coming into operation in 1975. The next was completed in 1977 and the last came into operation in 1979. All five institutes are sited in strategic positions, bearing in mind industrial needs as well as student catchment areas. The Morrison Hill Technical Institute set the basic pattern and the other four institutes were established on similar lines, although a number of additional disciplines have been included in the newer institutes.

From manpower survey reports published between December 1975 and August 1977, in ten major industries, it was later established that Hong Kong needed annually approximately 3,000 technicians and 7,500 craftsmen to meet expected growth and replacements.[2] These ten industries include automobile repairs, electrical, electronics, machine-shop and metal-working, marine engineering, construction, clothing, plastics, printing and textiles. As at August 1980, plans had been laid to conduct surveys in a number of other areas including the service sector and commerce.

The five technical institutes expanded rapidly in the

---

1. Various surveys conducted by Industrial Training Advisory Committee and Labour Department, Hong Kong Government.
2. Report on Technical Manpower Demand and Supply, 1977 to 82, (August 1977), pp. 1 to 3.

1970s and priority was given to part-time day students. A comparison is made, in this chapter, between the growth in student numbers, in technical institutes, and the growth of students on non-advanced courses in further education in England and Wales. A comparison is also made with Singapore. Actual growth too, in the technical institutes, is compared with planned growth and the increase in the numbers of female students is also examined.

There had been some difficulty in recruiting teaching staff, especially in specialised trades, and to help this process the Technical Teachers College was established in 1974. The role of the College, as it affects the technical institutes, is dealt with briefly as well as class-size in institutes which is directly related to the numbers of teachers required. Staff development and some of the recruitment difficulties are also examined.

The Morrison Hill Technical Institute

It has already been mentioned, in Chapter 1, that the Morrison Hill Technical Institute was the first of the five to open its doors. This was officially on September 1, 1969, but the first year was spent on a "lodger basis", in the premises of the Technical College (now the Polytechnic) at Hung Hom, Kowloon.[1] The original estimated completion date of the new building at Morrison Hill, on Hong Kong Island, was the summer of 1969, and it was never intended that the Institute should operate in borrowed premises. However, because of a series of delays, the eventual completion date of the new building was the summer of 1970.

On September 1, 1969 all craft and preapprentice courses (the preapprentice courses were converted, in 1970, to become basic-craft courses) and some technician courses, were transferred from the Technical College to the Technical Institute, as were the Preliminary and General evening

---

1. D.D. Waters, A Series of Papers on the Planning, Establishing and Running of Technical Institutes in Hong Kong, Paper One - General (September 1972), p.3, para. 2.1.

The Morrison Hill Technical Institute

courses which provide general education with some technical bias.[1] Some of the technician courses and all the higher technician courses remained at the Technical College. It was originally intended that both technician and craft courses should be run in the Technical Institute.[2] Later, however, the Principal of the then Technical College had advocated that all technician level work should be undertaken by the Technical College and the rôle of the Morrison Hill Technical Institute should be entirely at craft level.[3] The Principal of the Technical College felt that there was spare capacity at the College and, as it was better equipped and staffed than the Morrison Hill Technical Institute, it should run all the technician courses. He also felt that there would be plenty of scope in the important field of craft courses for the technical institute, and that it should concentrate exclusively on that type of work. This proposal was not accepted by the Director of Education who directed that some technician courses should also be transferred from the College to the Institute.[4]

The lodger basis, with which the two institutions were confronted during the 1969/70 academic year, was not an ideal arrangement and this resulted in a number of problems. For example, there was a shortage of accommodation and this caused some timetabling difficulties. Because of problems in recruiting new teachers, delays occured in transferring key staff from the Technical College to the new Technical Institute. As a result, only one new class, the one-year, full-time Technical Teachers course, commenced during the 1969/70 academic year.[5] The advantages, however, gained from the

---

1. Vocational Training in Hong Kong (May 1970), pp.20 and 21.
2. Proposal of a Technical Institute, revised (September 1964), passim.
3. Minutes, 20th Heads of Departments' Meeting, Technical College (21 March 1968), Minute 112.
4. (2)ED(GR) 1/18/4605/68 (2 July 1969).
5. D.D. Waters, A Series of Papers on the Planning, Establishing and Running of Technical Institutes in Hong Kong, Supplement to Paper Four - Staffing and Manpower Plan (January 1973), p.3.

"lodger" relationship were that, by the end of the first scholastic year, the Institute had built up a team of dedicated staff and the nucleus of an administrative system, including files, records and inventories. These served the Institute well, as soon as it moved to its new premises at Morrison Hill, and enabled it to get off to a good start in September 1970.

When the Morrison Hill Technical Institute first opened, in September 1969, it consisted of six departments.[1] These were titled, Business Studies, Construction, Electrical Engineering, Mechanical Engineering, Preliminary and General Studies (renamed General Studies Department in March 1976) and the Technical Teacher and Workshop Instructor Training Department. While the Technical College had run part-time courses for technical teachers and workshop instructors, it was not until the Morrison Hill Institute was established that a separate department for such work was set up. Also, it was not until then that full-time courses commenced. Later, it was found that a department of technical teacher training was not enough, and the Department at Morrison Hill Institute was transferred to form the nucleus of a new institution, which opened in September 1974, when the Technical Teachers College came into being.[2]

The Morrison Hill Technical Institute was officially opened by His Excellency the Governor, Sir David Trench, on 12 October 1970.[3] The ceremony was well attended by a large number of influential local dignitaries, including industrialists and civil servants.[4]

When the new technical institute first opened, in 1970, it had 126,950 square feet of floor area compared to the Technical College which had a floor area of 220,000 square feet excluding the library, the assembly hall and the caretakers' quarters.[5] In the mid 1960s, when the Institute was

---

1. TI/176/3 (12 November 1969).
2. Technical Education in Hong Kong, Handbook, Technical Education Branch, Issue No. 1 (September 1976), p.9.
3. Opening Ceremony (booklet) (12 October 1970).
4. Recollections of staff of Institute.
5. Waters, A Series of Papers ... Paper Three - Buildings, op. cit. p.5, para. 8.5.

first planned, staff in the Education Department and industrialists felt that the two technical institutions, namely the Technical College and the Technical Institute, would be sufficient to meet Hong Kong's technical education needs for many years to come. Few people, at the time, envisaged the rapid industrial expansion or the increase in population that has been outlined in Chapter 1.[1]

There were, as has already been pointed out, some constraints regarding the rate of expansion of the Institute, in its first year of operation when it was in borrowed premises. While no firm figures were laid down, it was generally felt within the Education Department, that the Technical Institute would not reach its maximum practicable utilisation of 1,300 full-time equivalent, day students, for around five or six years. The Institute was intended primarily for craft students, and preference was given to the part-time day mode of study; little expansion had been achieved with either craft or part-time day courses in the 1960s.[2]

As soon as the Institute moved to new premises, in 1970, the expansion in student numbers was rapid (see Table 3) and it was obvious that the Institute would soon be full.[3] As a result, the Principal wrote to the Director of Education informing him that at the beginning of the second year (1971/72) in its new premises at Morrison Hill, a number of workshops would already be overloaded.[4] He therefore, recommended that a further floor be added to the workshop wing. At the start of the 1971/72 academic year the Institute had a total of 10,483 students on roll (including evening students) together with 76 full-time and 474 part-time teaching staff.[5] It was necessary to run some "twilight classes", which were held after day classes had finished and before evening classes

---

1. Recollections of Principal and staff.
2. (45) TC/G/1/152A (27 January 1966).
3. Numbers on Roll, Technical Institute 1971/72.
4. (1) TI1/5 (24 May 1971).
5. Numbers on Roll, Technical Institute 1971/72.

started, in order to accommodate all the students in some disciplines. The additional floor was added and, together with the other improvements such as the canopy to the automobile workshop and additional store-rooms, work was completed on 15 August 1974.[1] Space was still at a premium, however, as much of the new floor was occupied by the Technical Teachers College as it too was short of space, especially for practical classes.

Because of pressure from industry and from the Industrial Training Advisory Committee a Department of Printing was established at the Technical Institute in October 1973. During the first academic year this consisted solely of 39 part-time day release students.[2] The Department operated in an old annexe at Caine Lane, at Mid-Levels, on Hong Kong Island, which had previously been occupied by the United College before it moved to the New Territories to become part of the Chinese University. A number of industrialists donated equipment to this new Printing Department. An open day was held in the Caine Lane Premises, on 13 December 1974, the purpose of which was to publicise how closely Government and industry had worked together to provide technical education facilities for the printing industry.[3] The Department of Printing moved to Kwun Tong, in Kowloon, when the new institute opened, in 1975.

Additional technical institutes

An ad hoc sub-committee was set up, in the first instance, by the Industrial Training Advisory Committee, in 1968, to review the need for additional technical institutes. The standing committee which was later established for this purpose, the "Committee on Technical Institutes" made a number of important proposals.[4] These included a recommendation

---

1. (18) 2/6692/64IV (7 August 1974).
2. Numbers on Roll, op. cit. 1973/74.
3. Letter from Chairman, Printing Industry Training Board, Hong Kong Training Council, to Director of Education, (129) IT/PRIN/TW (12 July 1974).
4. Interim Report No. 1, Committee on Technical Institutes (Period: 1 January 1969 to 22 July 1969).

that two more institutes should be completed by September 1971 and two more by September 1972 (making a total of five including the Morrison Hill Technical Institute). The Committee also recommended that no site for an institute should be less than one and a half acres in area (the area of Morrison Hill Institute site was approximately one acre).[1] It must be remembered that Hong Kong is one of the most crowded places in the world and is especially short of land in the urban areas.

A final report was later produced by the same committee, which was endorsed by the Industrial Training Advisory Committee.[2] This report made recommendations regarding the types and levels of courses to be run in the four proposed technical institutes and the districts in which the four institutes were to be established. While the recommendations regarding courses to be run were broadly followed, some changes had to be made later, especially with the Haking Wong and the Lee Wai Lee Institutes, because of changes in the industrial pattern over the years. With the exception of the last institute, the Lee Wai Lee, all were set up in the recommended districts. The fifth institute was established at Kowloon Tong as no suitable site could be found at San Po Kong.

The recommendations regarding courses to be run were based on industrial need, deriving largely from manpower surveys of the Industrial Training Advisory Committee, as well as information supplied by the Labour Department.[3] It was also recommended that institutes should be sited near Government resettlement, (low-cost) housing estates as it had been found, from past experience, that young people from

---

1. Exact area, 44,360 sq. ft. : Waters, A Series of Papers ... Paper Three - Buildings, op. cit. p.1, para. 2.1.
2. Report of Working Party on the choice of Courses of the Committee on Technical Institutes, Industrial Training Advisory Committee (December 1969), passim.
3. Eg. Report by Machine Shop and Metal Working Industrial Committee on the Manpower Survey of the Machine Shop and Metal Working Trades (2 April to 11 April 1968).

such areas were the most likely to want to become craftsmen. With the exception of the Lee Wai Lee Institute, whose location was changed, all the institutes are situated in industrial/commercial areas.

In addition to the five institutes mentioned above, a proposal was made that a further three should be constructed, at some future date, when industry had demonstrated there was sufficient demand and that it was prepared to sponsor its employees on part-time day courses in large enough numbers.[1] The sites proposed for these three additional institutes were in the New Territories, at Tuen Mun, Shatin and Tsuen Wan.[2] As at 1980, none of these institutes had been built but a proposal was made in the White Paper for a sixth institute to be constructed at Tuen Mun and, as at 1980, the expected completion date, of the approximately two-year building contract, was 1984.[3]

The proposal made by the Industrial Training Advisory Committee, in 1969, that the first two additional institutes should be in operation by 1971 and two more by 1972 proved to be too optimistic. The next two institutes were not, in fact, completed until 1975, the third was completed in 1977 and the fourth partially completed, and opened, in 1979.

It was also decided that the four new institutes should be similar in design to the Morrison Hill Institute and that they should be based on a semi-standard plan in order to simplify design and to speed up construction. As a result, all five institutes have, more or less, standard classroom and administrative accommodation, although the workshop accommodation varies depending on the trades taught. All the workshops are concentrated, as far as possible, in one wing, thus providing a "noisy zone", away from a "quiet zone" where

---

1. Waters, A Series of Papers ... Paper One - General, op. cit. pp.5 to 7.
2. (109)ED(TE) 2/6704/67II (14 July 1975).
3. The Development of Senior Secondary and Tertiary Education, (October 1978), p.8, para. 4.14.

the classrooms and similar teaching areas are situated.[1]

Student capacity

The maximum theoretical student capacity assumes that every seat in all teaching rooms is occupied. In practice, this is not possible as "student wastage", with students dropping out of some classes, takes place. Special teaching rooms, some laboratories and special workshops also tend to be used less than classroom accommodation. Moreover, the ratio between practical and theoretical work will vary with a change of course. In practice, it is generally assumed that maximum practicable student capacity is, on average, 85 per cent of maximum theoretical student capacity although, naturally, this figure is only a guide.[2]

All five institutes have been planned for a maximum student capacity of about 1,520 full-time equivalent day students (see Appendix 4). (Evening students, which in 1979/80 numbered almost 13,000 in the five institutes, are not included in this figure as institutes employ external centres and numbers are flexible.). This figure will, however, vary, depending on the types of courses run, but because of the large number of part-time day students actual numbers, by head-count, will be much larger than this. For example, the mix could be 960 full-time and 2,800 part-time day release students. It has been found from experience that, such an institute, is not so large that a student loses his identity and yet it is large enough to have sufficient flexibility. It is interesting to note a recommendation has been made that additional floors and annexes be added to the existing institutes.[3] It is intended that this work should be carried out in the first half of the 1980s. These additions will, in some cases, increase the size of the institutes to well over 2,000 full-time equivalent, day students at any one

---

1. Waters, A Series of Papers ... Paper Three - Buildings, op. cit. p.4, para. 8.
2. Technical Education Branch Administrative Circular 1/77, Capacity and Build-up of Technical Institutes (18 January 1977).
3. The Development of Senior Secondary and Tertiary Education, op. cit. p.16, para. 6.10.

sitting. A number of Diploma and Certificate course student-places are being transferred from the Polytechnic to the technical institutes in the first half of the 1980s.[1] This will free the Polytechnic and allow it to run more higher level programmes, including some degree courses.

While land in Hong Kong is in short supply, the original proposal made by the Industrial Training Advisory Committee, that no new institute site should be less than one and a half acres in area, has been adhered to.[2] In fact, with the exception of the Morrison Hill Technical Institute, all sites are in excess of two acres.

The Kwun Tong Technical Institute

This institute commenced classes in September 1975. It was officially opened by His Excellency the Governor, Sir Murray MacLehose, on 24 October 1975.[3] Kwun Tong is an industrial area of Kowloon much of which was reclaimed from the sea in the 1950s. Industry consists largely of light engineering, textiles and clothing; consequently, the teaching departments in the Kwun Tong Institute are mechanical engineering, electrical engineering, textiles, clothing and printing.

There are departments of mechanical engineering in all five institutes, and they all run basic craft courses.[4] Some institutes, however, specialise in certain fields. For example, Kwun Tong Institute runs courses in automobile engineering and electronics. The Textiles Department tends to specialise in knitting and knitwear manufacture. Further details may be seen at Appendix 3.

Although the printing department is in Kwun Tong most of the printing firms, especially the smaller ones, are situated on Hong Kong Island, either at North Point or in Wanchai. When the Morrison Hill Institute was planned, in

---

1. Ibid. para. 6.9.
2. See page 39.
3. Opening Ceremony of Kwun Tong Technical Institute (booklet), (24 October 1975).
4. Technical Institutes (joint) Prospectus 1979 to 80, p.166.

The Kwun Tong Technical Institute

the mid 1960s, there was little interest in printing courses, although a course was being run at the Tang King Po Trade School. However, a real need did appear when the Morrison Hill Institute was just about to open. The Printing Industrial Committee, which was part of the Industrial Training Advisory Committee complex, was not set up until January 1969.[1] By that time, the planning for Morrison Hill Institute was finalised and to have made changes would have been difficult. There was no spare space, on a very restricted site, for an extension. The Working Party, set up by the Director of Education, realised that the Kwun Tong Institute would not be the ideal location when it recommended that printing courses should be run there. On the other hand, Hong Kong is a comparatively small place, and a good ferry service connects Kwun Tong with both North Point and Wanchai and the underground railway now links up with Central district on Hong Kong Island. In addition, there are numerous bus routes.

Footwear courses were also run at this institute, as a pilot-scheme, until they were transferred to the Lee Wai Lee Institute in 1979.

The Kwun Tong Institute, like all other institutes, follows the initial basic pattern with regard to buildings, equipment and courses; like the Morrison Hill Institute, it concentrates largely on craft courses and the part-time day mode of study. Nevertheless, quite naturally, some improvements have been incorporated into the newer institutes. These include not only larger sites but also, among other things, more space per student in many workshops, better student common rooms, as well as better libraries.

The Kwai Chung Technical Institute

This Institute opened its doors to students in September 1975, at the same time as the Kwun Tong Technical Institute, and was formally opened by a leading industrialist

---

1. Final Report, Industrial Training Advisory Committee, op. cit. p.9, para. 2.32.

The Kwai Chung Technical Institute

and Executive and Legislative Councillor, Dr the Honourable S.Y. Chung (now Sir Sze-yuen Chung) on 20 February 1976.[1] This Institute was originally named the Tsuen Wan Institute but because the site was moved to Kwai Chung, a district adjacent to Tsuen Wan, the name was changed to avoid confusion when, as expected, an institute is built in Tsuen Wan in the future.[2]

As with all institutes, the departments were largely selected bearing local industrial needs in mind. Departments include mechanical engineering, electrical engineering, textiles, clothing and business studies. Specialisms comprise production engineering, yarn and woven-fabric manufacture as well as textile coloration finishing.[3]

The Haking Wong Technical Institute

This Institute first opened in the annex at Caine Lane, which had previously been occupied by the Department of Printing when it was attached to the Morrison Hill Institute. The Haking Wong Institute, while at Caine Lane, ran classes for about 100 motor-vehicle, part-time day release students, during the 1976/77 academic year.[4] The Haking Wong Institute was originally named the Cheung Sha Wan Technical Institute but the name was changed because of a $5 million cash donation by Mr. (now Doctor) Haking Wong, a leading industrialist.[5] The Institute started classes in its new building, in September 1977, and was officially opened by the Governor, Sir Murray MacLehose, on January 5, 1978.[6]

The departments in this institute comprise construction, electrical engineering, hotel-keeping and tourism, marine and fabrication as well as mechanical engineering. Specialisms include lifts and escalators, foundry work, and vehicle-body repairs. (See Appendix 3).[7] This institute, unlike the others,

---

1. Opening Ceremony, booklet (20 February 1976).
2. (51)ED(GR) 2/6714/69 (13 November 1972).
3. Technical Institutes (joint) Prospectus 1979 to 80, p.33.
4. Numbers on Roll, op. cit. 1976/77.
5. Minute 17, ED(TE) 6692/111/1 (12 September 1978).
6. Opening Ceremony (booklet).
7. ED(TE) 110/1 (March 1980).

The Haking Wong Technical Institute

also has a Department of Hotel-keeping and Tourism as well as a Department of Marine and Fabrication. A number of shipyards are situated close by. One of the Department of Construction's prime tasks is to run part-time day classes for full-time trainees from the Construction Industry Training Centre. (See Chapter 3).

The Lee Wai Lee Technical Institute

The Industrial Training Advisory Committee recommended that this institute should be built at San Po Kong but there was difficulty in finding a suitable site.[1] For this reason, the location was changed to Kowloon Tong, and it was originally to have been called the Kowloon Tong Technical Institute. However, in September 1978, the Institute was named after Mr Lee Wai Lee, a local industrialist and financier, who made a cash donation of $5 million towards the capital cost.[2]

The Education Department partially took over the new building, from the Public Works Department of the Hong Kong Government, on September 15, 1979 and classes started on 1 October of the same year.[3] Because most of the workshops were not completed, the Lee Wai Lee Institute "borrowed" accommodation from other institutes for some practical classes. The final handing over of the remainder of the new building was on May 19, 1980 and the institute was formally opened by Sir Yuet-keung Kan, a prominent local resident who has many business and community interests, on May 30 of the same year.[4]

The Institute has five departments. These are commercial studies, design, general studies, industrial technology, and mechanical engineering. Specialisms include aeronautical engineering, heavy motor vehicle work, and interior-design.[5] Industrial Studies is an interesting department in that it includes subjects such as optics, watch and clock repairs as

---

1. Report of the Working Party on the Choice of Courses, op. cit. p.4.
2. Minute 17, ED(TE) 6692/111/1 (12 September 1978).
3. (55) ED(TE) 6711/103/5II.
4. Opening Ceremony (booklet).
5. Technical Institutes (joint) Prospectus 1979/80, p.51.

The Lee Wai Lee Technical Institute

well as footwear. The latter was transferred from the Kwun Tong Institute, where it had been run as a pilot scheme. The General Studies Department has a computer, for teaching purposes, with on-line facilities to the other four institutes.

The rapid expansion of the technical institutes

On average each institute, during the 1970s, was able to accommodate approximately 960 full-time and 2,800 part-time day release students.[1] This gave a nominal total capacity in the five institutes of 4,800 full-time and 14,000 part-time day release students. However, the actual "mix" between full-time and part-time day release students varies according to demand. Priority is normally given to the running of part-time day classes where students are sponsored by industry. However, as the institutes employ outside centres for evening classes, the number of evening students they can accommodate is, to some degree, flexible.

Table 3 shows the build-up in student numbers, in technical institutes, between 1969/70 and 1979/80, in the three main modes of study, namely, full-time, part-time day (including part-time day release and block-release) and evening only. Percentages given in brackets show the increase over the previous year. As will be seen, the number of students in the first technical institute, in 1969/70, was small as it was situated in borrowed premises, at the old Technical College, and there was limited accommodation available. However, a sizeable increase in student numbers took place, in 1970/71, when the Institute moved to its new premises at Morrison Hill. It then had 566 full-time, 601 part-time day and 7,614 evening only students on-roll. Student numbers at the one institute increased steadily up to and including 1974/75, however, there was a reduction in student numbers in some areas during 1973/74 and 1974/75. This was because there was a world recession, which also hit Hong Kong, and the Government made some financial cuts to the recurrent funding. Table 3 also reveals that

---

1. ED(TE) 125/1 (27 August 1980).

Table 3 : Build-up of Student Numbers in Technical Institutes

(The bracketed figures show the percentage growth over the proceeding year.)

Mode \ Year	1969/70	1970/71	1971/72	1972/73	1973/74	1974/75	1975/76	1976/77	1977/78	1978/79	1979/80
Full-time	217	566 (161%)	710 (25%)	734 (3%)	617 (-16%)	680 (10%)	1 471 (116%)	1 638 (11%)	2 277 (39%)	2 575 (13%)	2 978 (16%)
Part-time day-release and block release	41	601 (1400%)	809 (35%)	1 124 (39%)	1 374 (22%)	1 674 (22%)	1 812 (8%)	2 241 (24%)	4 039 (80%)	5 574 (38%)	7 920 (42%)
Part-time evening	6 984	7 614 (9%)	8 964 (18%)	9 532 (6%)	11 600 (22%)	11 033 (-5%)	11 069 (0%)	11 694 (6%)	12 643 (8%)	13 375 (6%)	12 811 (-4%)
Total	7 242	8 781 (21%)	10 483 (19%)	11 390 (9%)	13 591 (19%)	13 387 (-2%)	14 352 (7%)	15 573 (9%)	18 959 (22%)	21 524 (14%)	23 709 (10%)

		FT	PTDR and BR	PTE
Note : 1. In 1979/80, total number of courses	=	42	76	76
total number of classes	=	81	273	353

2. The student numbers in the table above are October enrolments.

3. The total number of PTDR and BR students in March, 1980 is 7944.

Ref. : (TE) 114/1

May, 1980

YMM/tt

part-time day release student numbers continued to grow, even during the recession, as priority was given to this mode of study.

The opening of the Kwai Chung and Kwun Tong Institutes, in September 1975, led to a further growth in day student numbers in 1975/76. However, because Hong Kong was still in the throes of the recession, funds were limited and there was no growth in evening class numbers over the previous year. During the five-year period from 1975 to 1980, there was rapid growth in student numbers as four more institutes were opened, including Haking Wong in 1977 and Lee Wai Lee in 1979. The biggest increase was in the numbers of part-time day students which was due to the introduction of the Apprenticeship Ordinance in July 1976 (see Chapter 3), making it compulsory for apprentices in designated trades to attend part-time day classes in institutes.[1] The passing of this act, however, was too late to really affect student numbers in September 1976, and the big build-up came in September 1977 with an increase of 80 per cent over the previous year. There was, however, a reduction of four per cent in evening only student numbers, in 1979/80, due to financial cuts in the part-time lecturers vote.

Table 3 does not include short courses. Here numbers depended largely on funds remaining, at the start of an academic year, after they had been allocated to evening classes. Short courses have been run every year since 1970. The smallest number of students was in 1971/72 when 194 students joined such courses and the highest figure was in 1978/79 when 3,527 attended.[2]

---

1. A Guide to the Apprenticeship Ordinance 1976 and the Apprenticeship Regulations 1976, passim.
2. (116) ED(TE) 110/1 (9 June 1980).

Table 4 : Growth in Technical Institute Student Numbers from 1970/71 to 1979/80 (figures extracted from Table 3)

Mode of study	1970/71	1979/80	Increase	Percentage increase (rounded)	Average annual percentage increase (rounded)
Full-time	566	2,978	2,412	426	43
Part-time day	601	7,920	7,319	1,218	122
Evenings only	7,614	12,811	5,197	68	7
Total (by headcount)	8,781	23,709	14,928	170	17

Interesting comparisons can be drawn between the rate of growth in student numbers in Hong Kong, with corresponding figures in England and Wales as shown in Tables 4 and 5 respectively.

Table 5 : Growth in Student Numbers on Non-advanced Further Education Courses at Maintained, Assisted and Grant-aided Major Establishments in England and Wales from 1970/71 to 1977/78 [1]

Mode of study	1970/71	1977/78	Increase	Percentage increase (rounded)	Average annual percentage increase (rounded)
Full-time and sandwich	153,338	293,328	139,990	91	11
Day release	535,194	610,654	75,460	14	2
Evenings only	261,654	646,851	385,197	147	18
Total (by headcount)	950,186	1,550,833	600,647	63	8

1. Statistics of Education, Further Education, volume 3 (HMSO, November 1970 and November 1977).

Both tables take 1970/71 as the base year as this was the first academic year that the Morrison Hill Technical Institute was housed in its own premises. For the previous year (the first year it was established), the institute operated in borrowed premises; as previously mentioned, there were constraints regarding development. For the technical institutes, the last year taken is 1979/80 (see Table 4). For England and Wales (see Table 5) the last year that figures were available, at the time of writing, was 1977/78.

The figures for England and Wales include students attending non-advanced courses at national and regional colleges, art establishments, agricultural colleges, farm institutes, other major establishments and evening institutes. The actual courses include medical, health and welfare, engineering, agriculture, business, languages, teachers' certificates, general education and other miscellaneous courses as well as art and design, and GCE subjects. The technical institutes run courses in most of these fields although, in some areas, numbers are small.[1] For example, Morrison Hill Institute ran courses in education prior to September 1974. A short course has also been run in agricultural equipment. Although no GCE or courses leading to the Hong Kong Certificate of Education have been organised, Preliminary and General courses have always been run by the institutes, ever since they were transferred from the Technical College in September 1969.

The term, "non-advanced" courses in further education in England and Wales, comprises all courses leading to a final qualification up to and including Ordinary National Certificates and Diplomas or GCE "A" level, including City and Guilds of London Institute courses as well as Technician Education Council and Business Education Council Certificates and Diplomas.[2]

If we compare the average annual growth rates in England and Wales with Hong Kong, as shown in Tables 4 and 5, the following basic conclusions emerge. For full-time and sandwich courses (the technical institutes ran no sandwich courses) the average annual growth rate, from 1970/71 to

---

1. Various technical institute prospectuses, passim.
2. Leonard M. Cantor and I.F. Roberts, Further Education Today, A Critical Review (London, 1979), p.219.

1979/80, in the technical institutes was 43 per cent. The corresponding figure in England and Wales for the years 1970/71 to 1977/78 was 11 per cent. This means that the growth rate in Hong Kong was almost four times as great, in spite of the fact that the expansion of full-time classes, in Hong Kong, was often cut back, and the resources that were saved, as a result, were used for the running of part-time day classes.

The average annual growth rate of part-time day classes, in Hong Kong, was 122 per cent compared to two per cent in England and Wales. This rapid expansion in technical institutes was brought about largely because of the enactment of the Apprenticeship Bill, in 1976, and the designation of 23 trades in the same year (37 had been designated by 31 August 1980). Top priority has always been given to part-time day classes, and numbers built up from a very small base, namely 601 students, in 1970/71.

The average annual growth rate for evening classes in Hong Kong was only seven per cent compared to 18 per cent in England and Wales. A large number of evening classes were handed over from the Technical College to the Morrison Hill Institute in 1969 and, in the Autumn of 1970, the Institute had 7,614 evening only students on roll. With this large base on which to build, the increase in numbers, in the 1970s, was comparatively slow. If the institutes had introduced recreational type classes, then growth would have been more rapid. While many courses were oversubscribed and there was no shortage of qualified applicants, insufficient funds were provided for a more rapid rate of expansion.[1]

Looking at the overall, average, annual, growth-rate of student numbers in the institutes, in Hong Kong, we have a figure of 17 per cent which is more than double the average annual growth rate for England and Wales, which was eight per cent. To be fair, the institutes had a better opportunity for expansion, compared to their counterparts in England and Wales,

---

1. Minute 47, ED(TE) 124/3 (16 May 1980).

as they ran courses at craft level, on which emphasis was then placed; these had, in the past, in Hong Kong, been largely uncatered for as the Technical College had concentrated mainly on technician courses. In contrast, growth in England and Wales, in the 1970s, had slowed down, compared to the increases in day student numbers in the 1950s and the 1960s.[1]

It is also instructive to compare the 1979 enrolment figures in Hong Kong with Singapore, at both craft and technician levels, in technical education and industrial training.[2]

Table 6 : A Comparison between the 1979 Enrolment Statistics in Singapore and those of Hong Kong in Technical Institutions and Industrial Training Centres

Mode of study and level	Student numbers	
	Singapore	Hong Kong
Craft level		
Full-time	8,715	1,578
Part-time	1,744	12,833
Total	10,459	14,411
Technician level		
Full-time	8,561	7,391
Part-time	3,545	25,333
Total	12,106	32,724

Singapore has been chosen because, in many ways, it is similar to Hong Kong. Both are small and have been likened to "city states".[3] Singapore is 616 square kilometres in area compared to Hong Kong which is 1,061 square kilometres.

1. Reports of the Ministry of Education and the Statistics of Public Education for England and Wales, (London).
2. Robert Bray and Leung Kam-fong, Report on a Study Tour to Singapore, 25 May 1980 to 7 June 1980, p.35 (Revised).
3. Ibid. p.1; and Economic Survey of Singapore 1979, Ministry of Trade and Industry, Republic of Singapore.

Of the 2.36 million people in Singapore, in 1979, 76 per cent were Chinese compared to Hong Kong's approximately five million of which about 98 per cent were Chinese.[1] There is also a great deal of light industry in both places although Singapore does have a substantial amount of heavy industry as well.

Bray and Leung report that at craft level Singapore had a total of 22 vocational institutes and centres[2] compared to Hong Kong's five technical institutes and two industrial training centres, although the Hong Kong Clothing Industry Training Centre (see Chapter 3) trains mainly operatives and only a few technicians. At technician level, Singapore has a Polytechnic and one technical institute, which are the counterparts of Hong Kong's Polytechnic and its technical institutes. The latter provide technical education mainly for craftsmen but also for technicians. Only a broad comparison can be made from the figures available because, as already stated, Singapore does not differentiate to the same extent between technical education and industrial training (see Chapter 1).

When examining the figures in Table 6, it must be remembered that, in 1979, Singapore's population was in the region of 2.36 million, less than half that of Hong Kong (5.0 million). The figures show that Singapore has concentrated more on full-time attendance while Hong Kong has put more emphasis on the part-time mode of study - either part-time day or evening only. This was only possible in Hong Kong because the introduction of the Apprenticeship Ordinance made attendance on part-time day courses compulsory. This method of study is cheaper as the student only spends about ten hours in an educational institution compared to about thirty hours for full-time students. Another advantage is that most of the employees are learning their trade, on-the-job, in an industrial environment and that, if links are good (which is by no means always the case) between the institute and the training officer (if, indeed, one exists) in a firm,

---

1. Singapore Facts and Pictures 1979, Information Division, Ministry of Culture, Singapore.
2. Bray and Leung, loc. cit.

then the training can be married up with the technical education the employee is receiving in a technical institute. If an apprentice is receiving full-time, basic, off-the-job training, in a training centre, this will probably be of a higher standard than most firms are able to provide. If, however, a student is attending a full-time technical course with no related on-the-job or off-the-job industrial training, he is only learning part of his trade and, on graduating, he will still have a great deal to learn about his job in industry itself. These comments apply especially at craft level where there is more emphasis on practical work and less on theory.

One can also see, from Table 6, that the total number of craft students/trainees attending courses, by all modes of study, numbered 10,459 in Singapore and 14,411 in Hong Kong. At technician level, the former had 12,106 students/trainees and the latter 32,724. Indeed, it has been suggested, on various occasions, that Hong Kong has placed too much emphasis on technician education at the expense of craft education.[1]

It is now necessary to examine the estimated build-up of the maximum, practicable, student-capacity in technical institutes in Hong Kong as given in the 1977 Green Paper (see Table 7).[2] The same figures were used for the White Paper of 1978.[3] The latter estimated that, during the 1979/80 institute year, provision would be made for 2,240 full-time and 9,000 part-time student places (including both part-time day and evenings only) for Form Three school leavers to join institute craft or craft equivalent courses. (No similar figures were given in the White Paper for technician students). In practice, there were 6,014 qualified applicants for 17 full-time craft level courses in 1979/80; of these, 1,670 were

---

1. Waters, A Series of Papers ... Paper One - General, op. cit. p.14, para. 20; and Report of the Advisory Committee on Diversification, op. cit. p.231, para. 383.
2. Senior Secondary and Tertiary Education ... op. cit. p.30.
3. The Development of Senior Secondary and Tertiary Education, op. cit. Appendix 1, Items C and D.

Table 7 : Maximum Practicable Capacity of Technical Institutes[1]

			Pre-September 1975 One Technical Institute			September 1975 to August 1977 Three Technical Institutes			September 1977 to August 1979 Four Technical Institutes			September 1979 to early 1980's Five Technical Institutes plus annex for Morrison Hill Technical Institute in former Victoria Technical School			Early 1980's Six Technical Institutes		
			No. of places			No. of places			No. of places			No. of places			No. of places		
			New students	Continuing students	Total	New students	Continuing students	Total	New students	Continuing students	Total	New students	Continuing students	Total	New students	Continuing students	Total
Post Form III	Technical (craft)	Full-time	530	-	530	1,290	-	1,290	1,450	-	1,450	2,300	-	2,300	2,730	-	2,730
		PTDR/BR/S (a)	540	810	1,350	2,760	4,140	6,900	3,610	5,420	9,030	4,570	6,860	11,430	5,440	8,150	13,590
		Part-time evening	2,050	3,070	5,120	3,070	4,610	7,680	3,520	5,280	8,800	4,660	7,000	11,660	5,540	8,320	13,860
	Commercial/ Services	Full-time	80	-	80	120	-	120	80	-	80	340	-	340	400	-	400
		PTDR/BR/S (a)	-	-	-	-	-	-	40	-	40	70	140	210	80	170	250
		Part-time evening	380	580	960	580	860	1,440	580	860	1,440	760	1,150	1,910	910	1,360	2,270
Post Form V	Technical (technician)	Full-time	140	140	280	460	460	920	620	620	1,240	660	660	1,320	780	780	1,560
		PTDR/BR/S (a)	80	80	160	560	560	1,120	720	720	1,440	1,060	1,060	2,120	1,260	1,260	2,520
		Part-time evening	510	770	1,280	770	1,150	1,920	1,920	2,880	4,800	2,340	3,820	6,360	3,020	4,340	7,360
	Commercial/ Services	Full-time	120	120	240	220	220	440	320	320	640	590	590	1,180	700	700	1,400
		PTDR/BR/S (a)	-	-	-	-	-	-	80	80	160	80	90	170	100	100	200
		Part-time evening	260	380	640	380	580	960	380	580	960	510	760	1,270	610	910	1,520
Total post Form III			3,580	4,460	8,040	7,820	9,610	17,430	9,280	11,560	20,840	12,700	15,150	27,850	15,100	18,000	33,100[1]
Total post Form V			1,110	1,490	2,600	2,390	2,970	5,360	4,040	5,200	9,240	5,440	6,980	12,420	6,470	8,290	14,760
Total technical			3,850	4,870	8,720	8,910	10,920	19,830	11,840	14,920	26,760	15,790	19,400	35,190	18,770	23,050	41,820
Total commercial/ services			840	1,080	1,920	1,300	1,660	2,960	1,480	1,840	3,320	2,350	2,730	5,080	2,800	3,240	6,040
Total full-time			870	260	1,130	2,090	680	2,770	2,470	940	3,410	3,890	1,250	5,140	4,610	1,480	6,090
Total PTDR/BR/S (a)			620	890	1,510	3,320	4,700	8,020	4,450	6,220	10,670	5,780	8,150	13,930	6,880	9,680	16,560
Total evening (b)			3,200	4,800	8,000	4,800	7,200	12,000	6,400	9,600	16,000	8,470	12,730	21,200	10,080	15,130	25,210
Grand total			4,690	5,950	10,640	10,210	12,580	22,790	13,320	16,760	30,080	18,140	22,130	40,270	21,570	25,290	47,860

Notes :- (a) Part-time day release/block release/sandwich

(b) About 75% of the evening classes will be held at outside centres.

1. Senior Secondary and Tertiary Education a Development Programme for Hong Kong Over the Next Decade (November 1977), p.30.

admitted thus giving a qualified applicant to place ratio of 3.6 to one. This means there was a shortfall of 570 full-time places. The actual numbers of part-time students admitted to the 57 part-time day courses and the 35 craft level evening courses were 3,961 and 5,305 respectively.[1] The latter gives a qualified applicant to place ratio of 3.8 to one. Thus, a total of 9,266 part-time students were admitted or 266 more than allowed for in the 1978 White Paper.

These numbers show that actual recruitment has kept up quite well with the planned figures. The short-fall in full-time enrolment was, to a large extent, caused because in October 1979, about 15 per cent of the 332 teaching posts had not been filled owing to recruitment difficulties (see page 70). In addition, day classes were only about 83 per cent full and vacancies were largely found in part-time day classes, where there were a large number of different disciplines, and where it was not always possible to have 40 students in a class as many courses were undersubscribed.[2]

In theory, it is possible for technical institutes to build up to maximum capacity of about 1,500 full-time equivalent day students, in four years. This is because a large number of the classes are run on a part-time day basis and the duration of a craft, part-time day release course is three years while that of a technician, part-time day course is four years. While an institute is developing and there is spare capacity, it would be possible to run additional full-time courses instead of part-time day courses, until such time as the third and fourth years of part-time day classes came into operation. The danger of this practice, however, is that such, so called, "temporary" full-time classes might tend to become permanent, especially if industry was not prepared to cooperate by releasing apprentices in non-designated trades to attend part-time day classes.[3] Moreover, many

---

1. Enrolment Report for the Technical Institutes, 1979/80, Appendix 1.
2. Education Department records, Numbers of Students on Roll (1979/80).
3. Waters, A Series of Papers ... Paper One - General, op. cit. p.12, paras. 17.5 to 17.7.

industrialists prefer full-time or evening courses[1], as they are not committed to the same extent and are able to employ a technically educated student (but not necessarily an industrially trained one) after he has finished his full-time course.[2] In this case, the industrialist has not had to pay anything during his period of training, whereas when sponsoring an apprentice on a part-time day course he would have had to release him on full pay for one day a week.

Table 8 shows the extent to which accommodation was utilised by day students in December 1979.[3]

Table 8 : Numbers of Students, Expressed as a Percentage of the Maximum, Practicable, Day-student Capacity, as at December 1979

Technical Institute	Opening date (September)	Degree to which institute was fully occupied during day-time (percentage)	Remarks
Morrison Hill	1969	100	Jockey Club Primary School used as an annex to house additional students
Kwai Chung	1975	64	
Kwun Tong	1975	70	
Haking Wong	1977	79	
Lee Wai Lee	1979	42	
Average		71	

Evening classes have not been included because external centres were employed and thus, for evening classes, the overall

1. James M.H. Wu, Debate on Green Paper, Senior Secondary and Tertiary Education, Official Report of Proceedings, Legislative Council (5 July 1978), pp. 1153 to 1157 (p.1156).
2. Francis Y.H. Tien, Chairman, Hong Kong Training Council, (12)HKTC/COUN/MTG(9) (28 February, 1978).
3. (40)ED(TE) 124/3 (December 1979).

student capacity is, to a large extent, flexible. As the Morrison Hill Institute was full, as from September 1979, it also used the old Jockey Club Primary School annex which it shared with the Technical Teachers College. Approximately 24 per cent of the day students were accommodated in the annex. As Table 8 shows, Morrison Hill was fully utilised at the time. This was because it is the oldest institute and it is situated centrally on Hong Kong Island. It may be reached by tram and by bus and is within walking distance of the Wanchai Ferry, giving students ready access to commute to and from Kowloon.

By contrast, the Kwun Tong and Kwai Chung Institutes, both of which opened in 1975, are further away from central Kowloon and are not so accessible by public transport. They have, therefore, not been so popular with many students and the build-up has been slower.[1] It is expected that, as urban development takes place, transportation will improve in these two areas.

Table 8 also shows that the Haking Wong Institute, which opened two years after the Kwun Tong and Kwai Chung Institutes, built-up more rapidly than they, largely because it is more accessible. The Lee Wai Lee Institute is also well situated, being close to a mass-transit rail station and a number of bus stops. Students can also commute, from the New Territories, through the Lion-Rock tunnel. This Institute had 411 full-time, 742 part-time day and 2,797 evening only students on roll (42 per cent full) in its first year of operation (1979/80).[2] This was a good complement especially bearing in mind this Institute was not fully completed for the major part of the academic year.

In contrast, however, 278 employers preferred Kwai Chung, 202 preferred Kwun Tong, 164 Cheung Sha Wan (Haking Wong Institute), 137 Wanchai (Morrison Hill Institute), and only 45 industrialists chose Kowloon Tong (Lee Wai Lee Institute) as

---

1. (35)ED(TE)120/2 (21 July 1978); and (38)AD/KCTI/GEN (14 July 1978).
2. (12)ED(TE) 6711/114/3 (13 December 1979).

the preferred location for the running of part-time day craft courses.[1] It is felt however, that the employers may have selected institutes near their own factories and that their views probably do not coincide with the views of their employees who often prefer to attend an institute near their own home.

While the growth in full-time student numbers in technical institutes has not been so great as planned, there is no doubt that it could have been more rapid.[2] For example, in the 1975/76 academic year Kwun Tong and Kwai Chung Institutes were reduced from a proposed 824 to 576 full-time equivalent day places and from 816 to 615 full-time equivalent day places respectively.[3] There was a world-wide recession at the time and, when the decision was made to reduce the numbers of students, money was in short supply. Such action was justifiable. Again, in 1979, the five institutes were reduced, by the Government Secretariat, from their proposed target of 1,350 additional full-time equivalent places to 1,100 places. The main reason given for the reduction was that the institutes had a number of vacant teaching posts, left over from the previous year, which it had been difficult to fill. The subject areas concerned included hotel-keeping and tourism, clothing, construction and marine engineering.

Female students

All courses in technical institutes in Hong Kong have always been open to both sexes.[4] In spite of this, however, the number of female students enrolling has been comparatively small in most disciplines, as Table 9 shows.

---

1. Report of the Third Survey of Part-time Day Release Courses by the Committee on Technical Training in Institutions of the Hong Kong Training Council Conducted in August - September 1980, p.14, paras. 4.9 and 4.10 and Appendices 9 to 14.
2. Minutes 29 and 38, ED(TE) 124/3 (15 December 1979 and 15 January 1980 respectively).
3. (4) ED(TE) 1/1/107/74 (27 June 1975).
4. D.D. Waters, On Technical Education, Women and All That, New Horizons, The Journal of the Hong Kong Teachers' Association, No. 18 (November 1977), pp.68 to 76 (p.72).

Table 9 : Numbers of Female Students in Technical Institutes shown as a Percentage of the Total Student Population

Mode of study \ Year	1977/78[1] (percentage)	1978/79[2] (percentage)	1979/80[3] (percentage)
Full-time	20	21	25
Part-time day	1	1	2
Evenings only	15	14	21
All modes of study	12	12	15

As can be seen, the proportion of female students to the total student population was 15 per cent in 1979/80. They were most numerous in full-time classes. From the academic year 1977/78 to 1979/80, all modes of study showed small but steady increases in the numbers of female students, as may be seen from Table 9. For example, the proportion of full-time students rose from 20 to 25 per cent, part-time day from one to two per cent and part-time evening from 15 to 21 per cent, although there was a slight drop, to 14 per cent, in the case of evening classes, in 1978/79. The overall figure rose from 12 to 15 per cent over the same two year period.

The small percentage of women studying in technical institutes is due partly to Chinese culture but mainly to the slow progress being made in persuading girls to enter industries traditionally dominated by men and, in turn, in persuading employers to accept them. A common view is that certain trades are only suitable for men and that women should not be employed because of their lack of physical strength.[4] Girls know this and they are therefore often cautious in embarking on a course unless, at the end, there will be good opportunities for getting a job with a good

1. Technical Institute Comparison Study, 1977/78, p.5.
2. Ibid 1978/79, p.5.
3. Enrolment Report, Technical Institutes, 1979/80, para. 6.
4. D.D. Waters, Technical Education for Girls (11 August 1978), p.3.

salary and good prospects. In this regard, Table 10 shows that, in most cases, the proportion of females is higher on technician courses than on craft courses. This is because the former have higher theoretical and the latter more practical content and it is sometimes felt that girls may not be able to cope so well when the work is heavy and unpleasant. Traditional Chinese attitudes greatly influence most girls when they leave school and apply to join courses in technical institutes.[1] As a result, courses in clothing, textiles, commercial studies, and hotel-keeping and tourism, which are considered more suitable for girls, have been able to enrol a large number of female students as Table 10 shows. The same table shows that, in October 1979, there were no girls in any marine and fabrication courses and generally few in the science-based courses such as engineering and construction.

---

1. Technical Institutes (joint) Prospectus 1979/80, p.65.

Table 10 : Numbers on Roll (as at October, 1979) in Technical Institutes (by discipline)

Discipline	Full-time		Part-time day		Part-time evening		Short courses
	T	C	T	C	T	C	
Clothing	-	30(24)	156(41)	109(26)	123(56)	364(188)	-
Commercial	485(379)	169(147)	140(67)	10(7)	2086(1450)	895(582)	-
Construction	236(19)	88(1)	461	941	892(33)	721	-
Design	45(16)	21(9)	-	23	88(29)	81(30)	-
Electrical	348(8)	360(1)	115	1075(3)	1091(9)	1182(2)	391(8)
General Studies	-	130(24)	119(2)	-	-	2149(45)	-
Hotel-keeping and Tourism Studies	134(86)	-	40(5)	-	257(81)	-	-
Industrial Technology	43(4)	38	18(1)	99(5)	91(12)	164(14)	-
Marine and Fabrication	34	41	19	519	49	210	60
Mechanical	360(5)	204	206	3227	467(1)	1270(1)	-
Printing	-	39(1)	-	324	137(18)	104(7)	-
Textiles	119(17)	59(5)	-	319	213(40)	77(16)	-
Total	1799(534)	1179(212)	1274(117)	6616(41)	5494(729)	7217(885)	451(8)

Note : The unbracketed figures give the total male and female enrolments. The bracketed figures, if any, give the female enrolments.

Key

C = Craft

T = Technician

Ref. : (TE) 114/1

c.c. ED(TE) 7/163/77 as Encl. (17)[2]

It is interesting to compare the numbers of female students in technical institutes, in Hong Kong, with those of England and Wales, as shown in Table 11.

Table 11 : Numbers of Female Students Studying in Technical Institutes in Hong Kong, shown as a percentage, Compared with Numbers of Female Students Studying on Non-advanced Courses in Maintained, Assisted and Grant-aided Major Establishments in England and Wales, as at the 1977/78 Academic Year.

Mode of study \ Institutions	Colleges in England and Wales[1] (percentage)	Technical Institutes in Hong Kong[2] (percentage)
Full-time	53	20
Part-time day and day release	34	1
Evenings only	63	15
All modes of study	49	12

It must be remembered that the colleges of further education and the technical colleges in England and Wales run a large number of courses in such fields as medical, health and welfare, social studies, languages, literature, art, music and drama as well as GCE and CSE, which traditionally enrol a large number of female students. The technical institutes, on the other hand, run a limited number of courses in only a few of these fields.

In some countries it is quite common for women to become engineers. For example, in the USSR it has been reported that women account for about one third of all engineers.[3] By contrast, Britain is much like Hong Kong, and J. Wellens

1. Statistics of Education, Further Education, 1977, volume 3 (HMSO), p.35.
2. Technical Institute Comparison Study, 1977/78. p.5.
3. D.D. Waters, Technical Education and Industrial Training in the USSR, Industrial Training International, volume 3, number 12 (England, December 1968), pp.565 to 574 (p.573).

points out that out of 250,000 technicians in its engineering industry only about 3,000, or about one per cent, are women.[1] The position in Singapore is slightly more favourable and here it has been recorded that women make up about two per cent of the engineering profession.[2]

The 1977 Working Party on Senior Secondary and Tertiary Education made a specific recommendation that technical institute courses should cater fully for women as an increasing element in the trained labour force.[3] Indeed, attempts have been made to do this, and, as we have seen, all courses in technical institutes have always been open to both sexes. It is generally agreed that the figure of 15 per cent female students in the technical institutes, in the 1979/80 scholastic year, is too low and that more avenues of study need to be opened up for women. Many people consider that, given Hong Kong's relatively full-employment, women constitute a largely untapped source of "manpower".

The Working Party recommended, in 1977, that as the economy becomes more diversified and new industries develop, in which no customary balance has been established of relative proportions of male to female employees, the range of career opportunities will widen.[4] The institutes have already catered for this potential development by introducing such courses as hotel-keeping and tourism, design, optics, and watch and clock repairs.

However, the Industrial Training Boards of the Hong Kong Training Council did not feel that industry discriminated against female leavers from technical institutes; nevertheless, they agreed to do what they could to encourage employers to offer the same opportunities to female institute leavers as were offered to male students.[5] They pointed out, however,

---

1. John Wellens, Girl Technicians for Engineering, Industrial Training International, volume 9, number 3 (March 1977), pp. 105 to 111 (p.105).
2. National Survey of Engineering Manpower 1977, Ministry of Science and Technology, Singapore, p.3, item 2.
3. Working Party Report on Senior Secondary and Tertiary Education (May 1977), p.50, para 4.15.
4. Working Party Report on Senior Secondary and Tertiary Education, op. cit. p.50.
5. Letter from Hong Kong Training Council to Director of Education (131)HKTC/TTI/MTG (III) (18 July 1979).

that some employers are reluctant to employ females because of lack of facilities, such as washrooms. The Hong Kong Training Council agreed that girls are traditionally reluctant to work in the engineering sector of industry because of the generally "harsh working environment". It was also felt that because many girls schools did not offer science subjects many were not qualified to apply for some technical courses.

The Education Department itself made five major suggestions in order to encourage more girls to enrol on technical institute courses.[1] These were that attempts should be made to encourage schools to allow girls to study "boys subjects" eg. design and technology as well as practical electricity; also that a special career-pamphlet, for girls, should be prepared. It was also suggested that the Careers Advice Service , in the Education Department, should be strengthened and that more courses should be started in institutes which are suitable for girls. Also, a recommendation was made that educational establishments should work more closely with industry so that girls, on completion of their courses, can take up suitable employment.[2]

Build-up in staff numbers

A large increase in staff has, naturally, been necessary in the technical institutes over the years as the following figures show.[3]

---

1. Waters, Technical Education for Girls, op. cit. p.3.
2. D.D. Waters, School/Industry Links (10 November 1979), passim.
3. Figures extracted from establishment records, Education Department.

Table 12 : Numbers of Staff in Technical Institutes

Staff \ Academic Year	1969/70	1970/71	1974/75	1979/80
Full-time teaching staff including principals, vice-principals and heads of departments (establishment).	25	68	90	367
Full-time, non-teaching staff (establishment).	10	57	58	267
Part-time teachers (Headcount).	305	396	493	847
Total	340	521	641	1,481

However, not since the first institute was set up has full established strength been achieved, because of staff turnover and the difficulty in recruiting staff in certain subject areas. In Table 12 the part-time staff figures refer to actual numbers, namely strength, as there is no fixed establishment for such teachers.

A rapid expansion of staff was, of course, planned and it was envisaged that, from 1973 to 1977 inclusive, teaching staff in technical institutes would increase by approximately five-fold.[1] Considering the competition in recruiting staff between the technical institutes, the Polytechnic, the training centres and the Industrial Training Branch of the Government Labour Department, not forgetting the recruitment of technical teachers for schools, it seemed unlikely that such rapid expansion could take place without a drastic lowering of standards.[2] As the Council for Technical Education and Training for Overseas Countries (TETOC), in London, put it,

1. Waters, A Series of Papers ... Paper Four - Staffing and Manpower Plan, op. cit. (January 1973), p.(VI), para. 12.
2. Ibid. para. 14.

> The estimated expansion of staffing for the institutes is very great: a five-fold expansion in five years ie. an annual increase of about 40 per cent (actual estimated figure = 38 per cent) ... it will be difficult to preserve standards. The actual increase for the institutes is only a fifth of the increase in the Colony as a whole - it is difficult to see how this overall increase can be provided.[1]

In practice, as can be deduced from Table 12, the increase in the number of staff was not so great as had been originally estimated because the technical institutes developed more slowly than was expected. Nevertheless, the increase from an establishment of 90 full-time teaching staff, in 1974/75, to 367 posts in 1979/80 was still striking, although the latter figure included 27 vacancies, as at 13 June 1980, some of which were due to staff turnover.[2] The actual increase over a five year period is in excess of three fold or 32.5 per cent annually. Although it was well short of the estimated 40 per cent expansion, as mentioned above, because of the delay in building the institutes, nevertheless the growth was still substantial. How well standards have been maintained in technical institutes, during this period of rapid growth, is dealt with in Chapter 6.

Class-size

During the academic years 1969/70 to 1979/80 the maximum class size, as laid down by the Director of Education, has been one teacher to 40 students, both for classroom and laboratory work. In the latter case, however, the teacher is assisted by a laboratory technician. In workshops, one teacher should not supervise more than 20 students.[3] In the

---

1. Gordon Hunting, Council for Technical Education and Training in Overseas Countries (3 August 1973), (41)ED (TE) 7/6704/72.
2. Extracted from establishment records, Education Department.
3. Education Ordinance 1971, p.10, clause 24.

Technical College, after the Second World War, a class did not exceed 30 students but, in the early 1950s, this figure was increased to 36.[1] Later, in the mid 1960s, for Diploma, craft and preapprentice courses the figure was increased to one teacher to a class of 40 students. In 1969, this practice was carried over to the newly-established Morrison Hill Technical Institute. The class size was increased because, as is common in many educational establishments in parts of Asia, most courses were heavily oversubscribed and staff did not like to turn away so many qualified and promising students.[2] The ratios of one teacher to 40 students for classroom work and one to 20 for workshop classes, has been adversely commented on by different people, including the Commissioner for Labour, who considered the classes to be too large.[3] In his reply, however, the Director of Education said that standards which can be set in Britain might not, for various reasons, be acceptable in the circumstances of Hong Kong.[4]

The Industrial Training Advisory Committee also felt that the class size was too large. It recommended that it be brought into line with International Labour Organisation recommendations for South-east Asian countries which was 32 students in a class, and not more than 16 students to one instructor (assisted by a workshop technician who must be a skilled craftsman) for practical classes.[5] In his reply the Director of Education pointed out that technical institutions in Hong Kong had a good safety record and that Chinese students are generally well disciplined in workshops.[6] He said, however, that he would keep the recommendations of the Industrial Training Advisory Committee in mind. Since then, no changes have been made. Various visiting education advisers have

---

1. Recollections of teaching staff.
2. Recollections of past Technical College teaching staff.
3. (40)IT/VT/CHI/49^{II} (7 December 1967), para. 2.
4. (20) ED(GR)4102/49^{II} (29 December 1967), para. 3.
5. CVT Paper, No. 1,/68 (7 May 1968), para. 2; and (20) AU/CVT/GEN (15 October 1969).
6. (49)ED(GR) 10/3149/66 (21 November 1969).

also commented on the staff/student ratio which, in the interests of sound "training", they considered to be high.[1] Others said there was no teaching situation, other than the straight-forward lecture, for which a class of 40 students is manageable.[2]

It has to be borne in mind that Hong Kong is not an advanced industrialised country and that, during the 1970s, it was faced with rapid expansion in technical education, requiring large numbers of additional technical teachers. If, at the same time, the class size had been reduced this would have meant recruiting and training still more teachers.[3] In any case, not everyone agreed that the class size should be reduced. A member of the staff of the International Labour Organisation declared that while one to 32 and one to 16 ratios were desirable, owing to a lack of qualified "instructors" many countries in Asia adopt the 20 to one ratio for workshop classes and this was acceptable.[4]

One of the main reasons usually given for having small laboratory and workshop classes, with small groups of students under one instructor, is because of safety. However, in May 1980, the accident log-book in each of the five technical institutes revealed that the average number of minor accidents in each institute had been six per annum, consisting mainly of minor injuries like cut fingers. Indeed, there has been no serious accidents in the history of the institutes.[5] From this it can be seen that the safety record has been good in spite of the fact that large classes have been the norm. In any case, while a class may consist of 40 students, or even more in some cases, at the start of the academic year, this number is soon reduced because of dropouts and poor attendance. For example, during the 1979/80 academic year,

---

1. H.E. Hammond, Report on Morrison Hill Technical Institute (August 1968), p.7, para. 17; and J.W. Gailer, Visit to Hong Kong 13 to 16 June 1971, p.2, para. 2.2.
2. Gordon Hunting, TETOC, A/HK/2 (3 August 1973), p.1, para. 3.
3. R.F. Simpson, Schools Pay More for Small Classes, South China Morning Post (19 February 1972); and Editorial, South China Morning Post (31 October 1978).
4. Ian Grant, Morrison Hill Technical Institute (17 July 1968), para. 31.
5. Returns from Principals, (29) to (34) ED(TE) 131/1 (15 May to 6 June 1980).

during the month of March, the average attendance for full-time classes was 33, for part-time day 26, and for part-time evening classes 22 students only.[1]

Nevertheless, some staff in the technical institutes feel that class size should be reduced, for example, to one teacher to 30 students for classroom work and one teacher to 15 students (or even 12[2]) for workshop classes.[3] The 1978 White Paper recommended that in secondary schools it would be difficult to reduce maximum class size to below 40 in the immediate future, because of the shortage of teachers, but that, nevertheless, this should be the aim for the mid-1980s.[4] If such a move is introduced it would also, no doubt, apply to technical institutes. It should be an objective, it is suggested, for about 1985 when the position regarding the recruitment and training of teachers is not so acute after the expansion rate has slowed down.

Staff development

As we have seen, the technical institutes during the 1970s, were faced with a rapid increase in the numbers of staff required. Many of these were ill equipped as teachers and consideration had to be paid to staff-development from the start. For this reason, the principal designate of the first technical institute was sent on a study-tour and a series of attachments for five months, in 1967/68, in the course of which he visited the USA, France, Belgium, Holland, England, the USSR and Japan.[5] A number of things which the principal designate observed in these countries, such as types of equipment, curricula and management methods, were later put into effect at Morrison Hill and later still at other institutes.

---

1. Technical Institutes/Technical Teachers College, Policy Meeting, paper for discussion, Class Size in Technical Institutes (12 June 1980), p.2.
2. H.K. Yung, Acting Principal, Kwun Tong Technical Institute, (33)KT/132/13 (25 June 1980).
3. D. Ng, Principal, Kwai Chung Technical Institute, (179) KCTI/2/28 (19 June 1980).
4. The Development of Senior Secondary and Tertiary Education op. cit. p.11, para. 5.6.
5. D.D. Waters, A Report on a Study Tour on Vocational Training and Technical Education (June 1968).

In the case of the first technical institute, at Morrison Hill, all senior posts, including principal, vice-principal and five head of department posts were filled by experienced members of staff who were transferred from the Technical College. In addition, 17 posts were transferred from the Technical College including fifteen experienced incumbents.[1] The Vice-Principal and all Heads of Departments had been or were sent overseas, mostly to Britain, for study-tours consisting of visits, attachments and training in education and related institutions, either before or after they took up their technical institute posts. Since then, it has been Government policy to send senior institute staff, as well as a number of teachers in specialised subjects, overseas for further training and experience on a regular basis. This has been invaluable and has helped, to some degree, to overcome the "inbreeding" which tends to develop in a small place like Hong Kong.

Because of the considerable amount of work that has to be done before a new institute opens its doors, the aim has been to have the principal, the vice-principal and the heads of departments in post by April when an institute was due to open in September of the following year, that is 17 months in advance of the opening date.[2] In practice, this has not always been possible because often staff could not be released from the post they were holding as a suitable replacement could not be found in time. However, early appointment of key staff to institutes is highly desirable as it enables them to prepare equipment lists and layouts for workshops and laboratories, to help recruit new staff and to draw up curricula and syllabuses and undertake the many tasks which accumulate before an institute opens its doors.

As far as the appointment of staff is concerned, the Hong Kong Government has a policy of localisation, whereby an expatriate must not be recruited if a suitable local staff

---

1. Waters, A Series of Papers ... Paper Four - Staffing and Manpower Plan, op. cit. p.13, Figure 7.
2. Ibid. Appendix XIV.

member can be found to fill a vacancy. In addition, it must be remembered that craft courses in technical institutes are taught through the medium of Chinese and such courses, in the 1970s, made up 70 to 80 per cent of the work of the institutes. This restricts the value of an expatriate teacher as very few achieve any degree of fluency in Chinese (Cantonese) which is a difficult language to master. Until mid-1971, the Principal of the Morrison Hill Technical Institute was the only expatriate employed full-time in the institute. During the 1979/80 academic year, out of a total establishment in all five institutes of 367 full-time teaching staff, nine were expatriates.[1] Such staff do, however, help to avoid in-breeding and bring in new ideas.

When new staff were being recruited for the Morrison Hill Technical institute, for the 1969/70 academic year, a number of difficulties were experienced.[2] These included not only delays in recruiting new teachers for the start of the year but also difficulties in finding suitable staff for some of the more specialised areas such as tool and die work and electronics.[3] Often, in specialised areas, industry is able to offer better salaries.[4] It is also often found, in a small place like Hong Kong, that the technical institutes and the Polytechnic, and indeed other establishments, are competing for the same person. However, as technical institutes are run by the Government their members of staff are civil servants. As a result, "hiring" and "firing" are slow processes and rarely as straightforward and simple as in a non-government organisation.

Before the opening of the Morrison Hill Technical Institute, in 1969, no full-time technical-teacher training courses were run in Hong Kong, although the Technical College did run part-time courses.[5] When the first institute was

---

1. Education Department, establishment records.
2. Waters, A Series of Papers ... Supplement to : Paper Four - Staffing and Manpower Plan, op. cit. pp. 2 and 3.
3. Waters, A Series of Papers ... Paper Four - Staffing and Manpower Plan, op. cit. p.15, paras. 2.6. and 2.8.
4. Ibid. p.25. para. 2.25.
5. Ibid. p.48. para. 3.9.

set up, a separate department was established to handle the training of technical teachers and workshop instructors. There were some feelings, however, this department would have been better established at either the Technical College, which was concerned with higher level courses, or in one of the colleges of education.[1] Later, the Department of Technical Teacher and Workshop Instructor Training at the Morrison Hill Institute proved to be too small and, as a result, the Technical Teachers College was established in September 1974.

The Technical Teachers College is largely concerned with the training of technical teachers both for technical institutes and for schools. It also runs courses for instructors for industry and organises short courses and seminars, largely on an in-service basis.[2]

As at December 1979 the College had 176 full-time, 49 part-time day and 147 evening only students on roll.[3] In order to attract new suitable and experienced staff from industry, to attend a one-year, full-time teacher-training course at the College, enhanced financial grants are paid to full-time student-teachers under training who have considerable industrial experience.

In-service training of technical institute staff has always been given high priority by the Education Department. Of the 337 academic staff, including principals, vice-principals and heads of departments, in technical institutes in June 1980, 87 had attended overseas courses or attachments, 285 had attended local courses or attachments and 710 places had been taken up, by institute staff, on courses or seminars offered by the Technical Teachers College.[4] (see also Appendix 5).

It is also interesting to record that, as at November 1980, 68 per cent of teachers in technical institutes had

---

1. Ibid. p.33, paras. 3.1.1 to 3.1.6; and J.W. Gailer, The Development of Technical Education and Training in Hong Kong (March 1967), p.13, para. 6.2.2.
2. Working Party on Technical Teachers College, Report (April 1978), p.2.
3. Technical Teachers College, numbers of students on roll.
4. Letter to Chairman, Hong Kong Training Council from Director of Education, (39) ED(TE)134/7 III (3 June 1980).

attended a teacher-training course.[1] This figure can be compared with the further education teaching force in Britain who, as in Hong Kong, are not required to have "qualified teacher" status. In 1973, only about one-third of the former were teacher-trained.[2] However, this figure represented the number that had taken a full course of professional teacher-training leading to a certificate in education. Some of the remainder, in Britain, had taken part-time courses leading to other qualifications, such as the City and Guilds of London Institute Further Education Certificate. Of the 68 per cent in technical institutes, in Hong Kong, a number had undertaken part-time courses.

The "Haycocks committee", in Britain, recommended that, by 1981, all new entrants to full-time teaching posts in further education, who had less than three-years full-time teaching experience and had not taken a suitable pre-service course, must normally, during the first year of service, undergo teacher training.[3] This training should usually consist of release of one day a week, for one academic year, together with a block-release equivalent to not less than four weeks.[4] However, this proposal has not been implemented; instead there have been ad hoc developments in some parts of the country. A similar scheme commenced in Hong Kong, in September 1977, in the form of a two-year, part-time day release, in-service, teacher-training course. "Untrained teachers" in institutes attend for one week, full-time, during each summer holiday, and for one day a week throughout two academic years. It is intended that every newly recruited teacher, who is not teacher-trained, should attend this part-time day course. Up to August 1980, 39 had attended.[5]

Also, before each of the last four technical institutes opened, it was able to recruit up to a maximum of 12 new

---

1. The Role of the Technical Institutes, BOE/6/78 (November 1978), p.12. para. 4.9.
2. Advisory Committee on the Supply and Training of Teachers for Further Education (England, June 1975), p.2.
3. Ibid. p.19.
4. Ibid. pp.20 and 21.
5. Enrolment records, Technical Teachers College.

technical teachers one year in advance of the opening. These members of staff were then sent off on a one-year, full-time teacher-training course to the Technical Teachers College.[1] A large number and a wide variety of short courses and seminars has also been run by the Technical Teachers College for technical institute staff, mostly in the form of upgrading and updating courses.[2]

As previously mentioned,all staff in technical institutes are civil servants and are largely recruited, except for a few expatriates who are on contract terms (because of localisation), for a career. This is standard practice for civil servants in most countries. Because of this, great care has to be taken with the recruitment process. Moreover, as it usually takes longer to recruit a civil servant than to recruit a member of staff for a private firm or to a non-government organisation, recruiting suitable technical teachers for the start of an academic year has often caused difficulties.[3] As a result, recruitment procedures have been examined and an Education Department Establishment Committee was set up, in 1980, to help to streamline the system. The Director of Education now decides which new posts shall be created, up to a given maximum, instead of this decision being made by the Government Secretariat.

The recruitment of teaching staff for technical institutes has always presented problems, and the 1972 new staffing structure placed the institutes at a disadvantage compared with other Government departments when seeking staff with a similar background.[4] For example, if a fully qualified engineer, who is a corporate member of a British professional engineering institution, were to join the Public Works Department of the Hong Kong Government, he would be on a salary scale with a

---

1. The Role of the Technical Institutes, op. cit. p.12, para. 4.12.
2. D.D. Waters, talk at opening of Seminar, Design of Courses of English for Specific Purposes (11 June 1980), p.5.
3. Waters, A Series of Papers ... Supplement to : Paper Four - Staffing and Manpower Plan, op. cit. passim.
4. J.R. Devereux, Principal, Kwun Tong Technical Institute, The Quality of Technical Institute Education (24 August 1978), p.2.

substantially higher maximum than if he were to join a technical institute as a Senior Lecturer.[1] This has resulted in staff coming to a technical institute as a second choice.

Nevertheless, as we have seen, a great deal has been achieved in the training of technical teachers and it is doubtful if much more could have been done with the resources available. However, the staffing structure within technical institutes could be usefully modified in order to attract more and better recruits. At present, institute teachers, in some ranks, have not achieved salary parity with other officers in other sectors of the Government.

Conclusions

As we have seen, the first technical institute to open was Morrison Hill in September 1969. During its first year of existence, it operated in borrowed premises and, in the circumstances, it would have been better to delay the opening until the new building was available in September 1970.

The recommendations of the Industrial Training Advisory Committee, in 1969, that two more institutes should be completed by September 1971 and two more by September 1972 proved impossible to carry out, as there was insufficient time to plan, construct and equip the buildings and, more important, to train and develop staff. Nevertheless, the growth in student numbers in technical institutes between 1970/71 and 1979/80, by all modes of study, averaged 17 per cent annually, overall, and 122 per cent annually for part-time day classes. There can be few places in the world, if any, that have expanded at such a rapid rate.[2]

Although there are no formal barriers or constraints in technical institutes in Hong Kong, as in some countries, to prevent female students enrolling on any course, nevertheless, only 12 per cent of the students, during the 1977/78

---

1. Waters, A Series of Papers ... Paper Four - Staffing and Manpower Plan, op. cit. p.26, Figure 13.
2. (24) ED(RB) 692/78 pt. 3 (20 June 1980), p.2.

academic year, were women compared to a figure of 49 per cent on non-advanced courses in England and Wales.[1] While a great deal has been done, to remedy the situation, still more emphasis needs to be placed on technical education for women.

The build-up of staff has been rapid, to keep pace with the development of the technical institutes, and this has meant an extensive recruitment, training and staff-development programme. The Technical Teachers College was established in 1974 and a total of 1,082 training places, either locally or overseas, were arranged, during the ten-year period ending June 1980. By November 1978, about 68 per cent of the teachers in institutes had attended a teacher-training course. Bearing in mind the resources that Hong Kong had available it is doubtful if much more could have been done. For similar reasons, the decision to fix maximum class size at 40 students was probably correct, as smaller classes would have probably resulted in slower growth in student numbers.[2]

---

1. Technical Education and Industry, Report of a Commonwealth Regional Seminar/Workshop, Hong Kong (28 September to 7 October 1976), organised by the Commonwealth Secretariat and the Hong Kong Government, p.7, para. 10.
2. R.F. Simpson, The Development of Education in Hong Kong Problems and Priorities, pt.II (1967), p.395.

Chapter 3

Important Developments which Affected the Technical Institutes

Introduction

During the 1970s a number of important developments took place in education, in industry and in industrial training, either in or outside Hong Kong, which had profound effects on the technical institutes, and sometimes these produced conflicting and competing demands. For example, the rapid increase in the number of apprentices and, as a direct result, the increase in the number of part-time day students (such courses were given priority), frequently meant that the number of full-time student places planned, in order to keep in step with the recommendations in the 1978 White Paper on the development of senior secondary and tertiary education, had to be considerably reduced.[1]

The main developments external to the technical institutes which directly influenced them, during the 1970s, included the rapid expansion of secondary education, the establishing of the Hong Kong Polytechnic, the enactment of the Apprenticeship Ordinance and the setting up of industrial training centres. Other major developments included the introduction of a credit-unit system and the validation of programmes of study by the British Technician Education Council, as well as the increased emphasis placed on education for the handicapped, with disadvantaged students being integrated into normal technical institute classes.

In addition, during the 1970s, a number of important documents were produced which amounted to Government "statements of intent" and around which policy was later formulated. A typical example is the 1978 White Paper.[2] There were other important documents which sought the views

---

1. The Development of Senior Secondary and Tertiary Education, op. cit. Appendix I, item (a)C.
2. Ibid. passim.

of the public or made positive recommendations; for example, the 1977 Green Paper[1] and the Report of the Advisory Committee on Diversification, in 1979.[2]

The rapid expansion of secondary education as it affected the technical institutes

While this section is mainly concerned with secondary education as it affected the technical institutes it cannot be treated in isolation and must be set in the context of the education system overall. This is illustrated, in simplified form, at Figure 4.

Although pre-primary education is very popular it is not compulsory and there are no Government or subsidised pre-primary schools. Hong Kong has a system of nine years of universal, free and compulsory education, which was introduced in 1978 and came into full effect in 1981, and extends up to a boy or girl's 15th birthday or to completion of Form Three in a secondary school.[3] The first six years of the nine-year period are spent in primary school, which usually commences at the age of six, and at 12, pupils proceed to secondary school for a further three years of general education.

In July 1981, on completion of Form Three, of approximately 89,600 pupils participating in the Junior Secondary Assessment system, 52,521 (58.6 per cent) were allocated subsidised Form Four places. Of the remaining 37,000, while some took up Form Four places in private schools (number unknown), 949 went on to the 1,240 available full-time craft level places in technical institutes and the majority of the remainder went out to work, in some cases coupled with part-time study.[4] Of those going out to work, approximately 3,000 became craft apprentices. By 1986 it is likely that the number of 15 year olds proceeding to subsidised Form Four

---

1. Senior Secondary and Tertiary Education, A Development Programme for Hong Kong over the Next Decade, op. cit.
2. Report of the Advisory Committee on Diversification 1979, op. cit.
3. The Development of Senior Secondary and Tertiary Education op. cit. p.1, paras. 1.1 to 1.4; and Director of Education 1977-78 Annual Summary, p.5, para. 29.
4. Education Department Press Release 159/81 (27 July 1981).

Figure 4 : Simplified Diagram of Hong Kong's Basic Education Structure, as at 1979/80, Showing Normal Routes

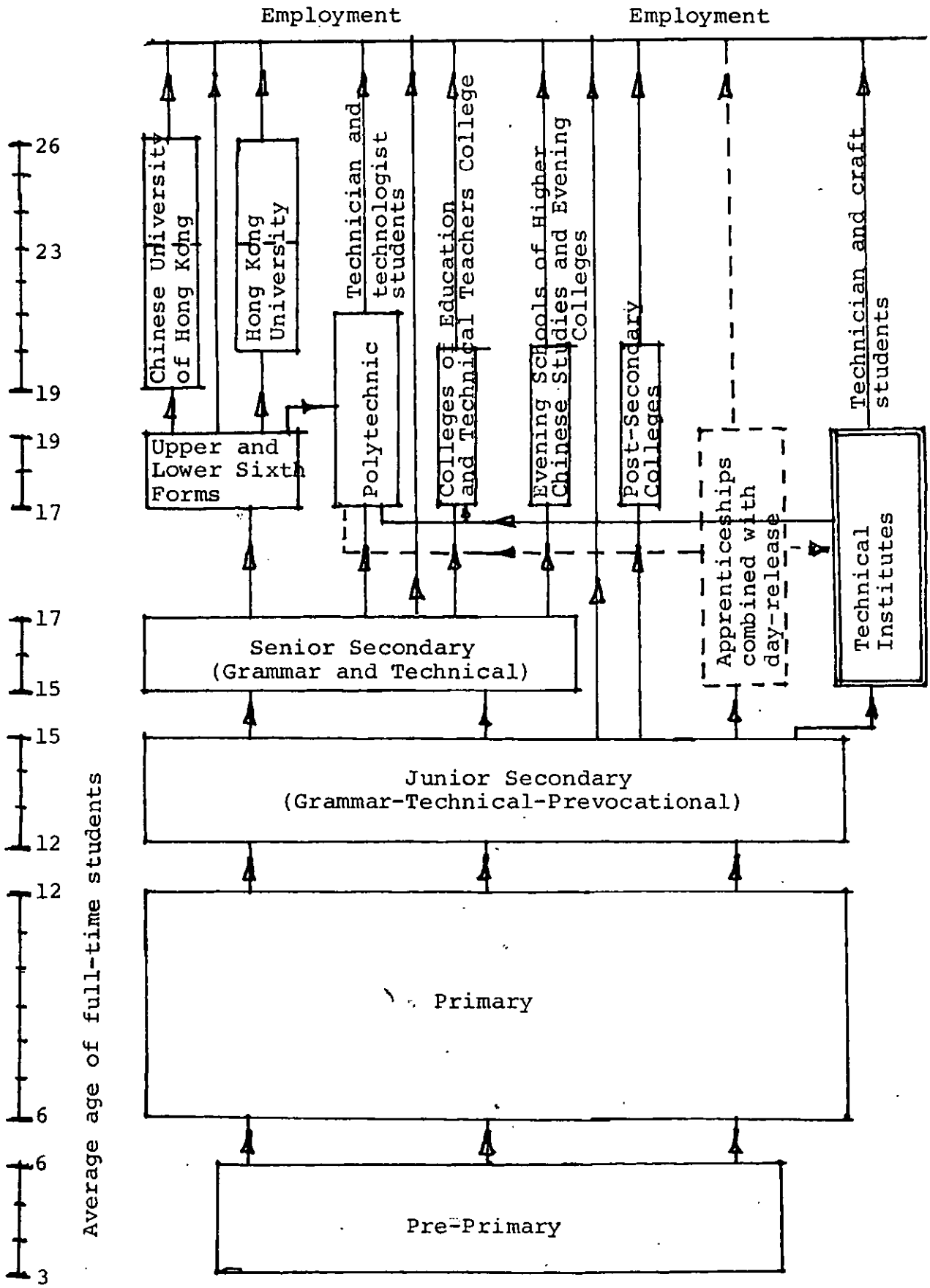

places will have increased to over 70 per cent because of a decrease in the number of young people in the age cohort.

Returning to Figure 4, up to one-third of the Form Five leavers will eventually continue their studies in Form Six and later Form Seven (Upper and Lower Sixth) although, in 1980, the figure was 30.2 per cent.[1] Other students, after completion of Form Five (or, exceptionally, after some studies in Form Six), go on to post-secondary colleges, colleges of education, the Technical Teachers College or technical institutes. Some go to the Polytechnic or continue their studies overseas. Others attend part-time evening classes in one of the above institutions, in one of the many private schools, or in an evening school of higher Chinese studies. It is estimated that, in September 1980, approximately 50 per cent of the Form Five leavers went on to some form of full-time study.[2]

The total number of students in all types of educational institutions (both day and evening), in September 1979, amounted to 1,383,720.[3] During the 1970/71 academic year there were 235,406 places in secondary schools.[4] By 1979/80 this figure had risen to 463,798, representing an increase of 97 per cent in ten years.[5] The population of Hong Kong is young and, in 1979, about 39 per cent were below the age of 20. However, the median age of the population was 24.8, compared to 20.7 in 1969.[6] Because of the 97 per cent increase in the number of secondary school places in the 1970s, more students were qualified and thus eligible to join a technical institute course, either at craft or technician level.

As at November 1979, there was a total of 503 Government, aided and private secondary schools. This figure included the following.[7]

---

1. The Development of Senior Secondary and Tertiary Education, op. cit. (October 1978), p.15, para. 6.1 .
2. Education Department records.
3. Education Department, Half-Yearly Statistical Summary, September 1979.
4. Figures extracted from Education Department Annual Reports; and Minute 53, ED(TE) 112/1/2 (10 June 1980).
5. Ibid.
6. Hong Kong 1980, A Review of 1979, p.206.
7. (58)ED(PREVOC)T/1/78 (18 April 1980).

Table 13 : Numbers of Technical Schools and Prevocational Schools, as at November 1979.

Type of school	Government	Aided	Private	Total
Prevocational	-	13	-	13
Technical	10	12	1	23

A prevocational school has been defined as a school offering a three-year, post-primary course (these schools started offering classes at Form Four and Five level, leading to the Hong Kong Certificate of Education Examination, in 1981).[1] The curriculum gives equal emphasis to both practical and general subjects and includes instruction in at least three major industrial and/or commercial disciplines.[2] A technical school provides a general education at secondary level, from Form One to Form Five, leading to the Hong Kong Certificate of Education Examination. Some schools have Sixth and Seventh Forms. Emphasis is on science rather than the humanities and on technical (non-vocational) subjects.[3] Traditionally, most of the secondary schools in Hong Kong are grammar schools which place emphasis on academic subjects, although many such schools have introduced technical subjects in recent years.

The 1977 Working Party Report on Senior Secondary and Tertiary Education stated that technical education can be considered in two distinct and equally important parts :

> Firstly as part of general education such as a school provides ... Secondly there is vocational technical education such as provided in a technical institute, and during the course of which the student commits himself to a particular trade or profession.[4]

---

1. The Development of Senior Secondary and Tertiary Education, op. cit. p.7, para. 4.7.
2. Secondary Education in Hong Kong Over the Next Decade, op. cit. p.25.
3. Ibid. p.26.
4. Working Party Report ... op. cit. pp.47 and 48, para. 4.7.

During a secondary school course a student should have the opportunity to develop an interest in technical subjects and in industry and it should be possible for an enthusiastic principal, together with his staff, partially to break down any so called "white-collar" complex. In this way, a number of students will wish to join a technical institute course.

As an example of the progress made in the introduction of practical/technical subjects into schools; by the end of 1979, there were 277 Government, aided (including prevocational schools), and caput (subsidised) schools, and, of these, 208 taught one or more practical/technical subjects. This meant that 75 per cent of these schools had practical/technical subjects in the curriculum .[1] These subjects included woodwork, metalwork, design and technology, electrical subjects and technical drawing, art and design, domestic science and pottery.

It has been suggested that students who successfully complete a course in a secondary technical school should have reached a standard equivalent to that achieved at the end of the first part-time day release year in a technical institute.[2] As technical schools presently provide a general (non-vocational) education such a recommendation does not seem to be practicable, especially since the syllabuses for technical subjects in secondary technical schools are not sufficiently comprehensive.[3] Certainly applicants who wish to join technical institute courses will have already covered some of the work in their previous schooling. If it has been covered, in sufficient depth, then a technician student may be exempted from certain subjects, under the credit-unit system, (see page 110) in a technical institute.[4] Few students had, up to 1980, received exemption although more will do so in the future with the policy of extending technical subjects in

---

1. K.W.J. Topley, Director of Education, Chinese Manufacturers Association Scholarship presentation ceremony, p.3 of address (14 December 1979).
2. Sir William Houghton, L.W.H. Payling and W.R. Lee, Report on, A Visit to Hong Kong, February 20 to March 2 1971, pp.22 and 23, para. 1.34.
3. Waters, A Series of Papers ... Paper One - General, op. cit. p.14, para. 21.3.
4. (50) ED(TE)110/22 (1 May 1979).

schools.

On the other hand, a student who has studied a craft in depth in a prevocational school is normally admitted direct to the second year of a craft, part-time day release course in a technical institute and to the second year of an apprenticeship.[1] Because the prevocational school curriculum consists of from 40 to 50 per cent of technical subjects this is practicable and the policy has worked well since September 1970 when it was first introduced. In the summer of 1979, 10.3 per cent of the prevocational (Form Three) leavers enrolled on full-time technical institute courses and 46.3 per cent joined an approved apprenticeship scheme and attended a part-time day, technical institute course.[2] In 1979, this amounted to 709 prevocational school leavers from eight schools as the remaining five schools were comparatively newly-opened and, thus, there were no graduates (see Table 13). With such a large percentage of prevocational school leavers going on to technical institute courses, close ties have developed, and the syllabuses in the two types of educational institutions have been married up so that excessive and wasteful overlap is avoided.[3] Because of the importance of the links between the out-turn of students in prevocational schools and the intake of technical institutes, a plan was drawn up so that numbers in the two types of institutions could be related.[4]

It has not been possible to build up such close ties with secondary technical schools, as, compared to the prevocational schools, they run a five-year course of a more academic nature, nevertheless, many technical school-leavers do join technician courses in institutes and many become technician apprentices (see page 100). Principals of

---

1. D.D. Waters, The Development of Technical Education in Hong Kong and Opportunities for Prevocational School Leavers, address at induction course for newly appointed teachers in prevocational schools (30 August 1979), p.24.
2. (67) 3/4576/71 III (December 1979).
3. Seminar on Curriculum Development, Prevocational Schools (Forms I - III) (26 July 1979), passim.
4. (6)ED(TE)2/6704/67 II (10 February 1973); and Houghton et. al. op. cit. p.81.

secondary technical schools have, naturally, always been keen that good opportunities exist for their graduates.[1] On occasions, application forms for technical institute courses have included the phrase, "... all things being equal, preference will be given to secondary technical ... school leavers."[2] With the introduction of credit-units into technical institutes the procedure of giving credit to secondary school leavers will be considerably simplified.

It was hoped, in 1970, that a close link could be forged between the newly opened Morrison Hill Technical Institute and the adjacent Victoria Secondary Technical School and that the school would be able to use some of the Institute's workshops and laboratories. However, it developed so rapidly that no suitable spare accommodation was available.[3] Houghton carried this idea a stage further and suggested that consideration should be given to the running of some secondary technical school courses, or even establishing such schools themselves, with their own heads, within buildings shared with a technical institute.[4] Such an arrangement would, it was pointed out, enable specialist tooling and equipment to be shared by the secondary and tertiary stages and would also enable scarce specialist vocational staff to be shared and economically deployed.[5] When these recommendations were made, in 1971, Houghton was of the opinion that, at least ten technical institutes of the size of the Morrison Hill Institute would be required.[6] In practice, as we have seen, Hong Kong had only five institutes in 1980. Thus, sufficient accommodation was never available. Also, the policy has been for secondary technical schools to provide a general education which includes technical subjects taught

---

1. Report by the Principals of Technical Schools (28 September 1971), passim; and Comments by the Committee of Principals of Technical Schools on Sir William Houghton's Report (9 February 1972), passim.
2. (29) TI/181/1 (20 November 1970).
3. Waters, A Series of Papers ... Paper One - General, op. cit. p.15, para. 21.7.
4. Houghton et. al. op. cit. p.23, para. 1.34.
5. Ibid.
6. Ibid. p.52, para. 2.37.

in a non-vocational manner. In addition, it is not always easy for two educational institutions to operate smoothly in the same building.

Serious consideration has, however, been given to the running of linked courses and a positive proposal was made to this effect.[1] It has always been intended that such courses should take the form of pupils being released from a secondary school for a half-day or a full-day a week to attend a vocational type course in a technical institute.[2] Such courses should not be looked upon as hobbies classes.[3] Linked courses were run by the Technical College, for some secondary technical school Sixth Form pupils, during the 1965/66 academic year, but the scheme was discontinued because it was popular neither with pupils nor staff of schools. No recognition was given to such courses for university entrance and it was felt in schools, rightly or wrongly, that time should not be "wasted" on subjects which had little or no standing at "A" level.

The 1977 Green Paper on Senior Secondary and Tertiary Education proposed that linked courses should be run once the prior need of technical education for industrial personnel has been satisfied[4] and it was at first intended that linked courses should be run when the Lee Wai Lee Institute opened in September 1979.[5] However, because the building was only partially completed and handed over to the Education Department in 1979, no such courses were mounted. The views of a number of schools were sought regarding the running of linked courses and there appeared to be limited enthusiasm.[6] In addition, some principals and staff of technical institutes were not keen on them and considered that they had limited value.[7] Some felt that while a pupil is in school he should concentrate

---

1. Working Party Report ... op. cit. p.53, para. 4.22.
2. (29)ED(TE)110/23 (8 April 1978).
3. Working Party Report, loc. cit.
4. Senior Secondary and Tertiary Education, A Development Programme ... op. cit. p.28, para. 7.5.
5. (29) ED(TE)110/23 (8 April 1978).
6. Minute 43, ED(TE)110/23 (13 April 1978).
7. (25) ED(TE)110/23 (18 January 1978).

on getting a good general education and that vocational type technical education should be left to a later date. Up to and including the 1981/82 scholastic year no linked courses have been run largely because of a shortage of resources.

A survey conducted in the summer of 1972, on behalf of the Institute of Careers Officers, revealed that in 1969 about 12,000 school pupils were attending linked courses in colleges of further education in the United Kingdom.[1] This figure rose to 15,000 in 1970. The larger groups were undertaking courses in building, commerce (the largest number), engineering, science subjects and catering. The survey recommended that linked courses should aim to meet local needs and that the point should be made clear to all concerned that the courses do not provide vocational training. The survey report went on to say that pupils should be carefully selected and that a "follow-up" should be carried out 12 months after the pupils start work to see if linked courses were helpful. The conclusions arrived at were that such courses could be beneficial but it is essential that they are well designed and that there is full cooperation from all concerned and that the aims are clear to pupils, parents, teachers and employers alike. Bristow says that technical college linked courses for secondary school pupils are expensive and, because of their nature, they cannot be held in high priority.[2] This view concurs with Hong Kong Education Department policy.

Bearing in mind that Hong Kong now has a system of nine years of general education for all and that no longer do only the academically bright go on to secondary school, it would appear that the Government recommendation to run linked courses was correct. In this way, the less academically gifted pupils in schools will have a better opportunity to

---

1. N.D. Harrower, Linked Courses and School Leavers, no. 4, ICON series, The Institute of Careers Officers (England, 1973), pp.4, 21 and 22.
2. Adrian Bristow, Inside the Colleges of Further Education, Department of Education and Science, 2nd edition (England, 1976), p.125.

study technical subjects and they will also be able to gain a better appreciation what technical education is all about before they leave school to take up employment or to join a full-time technical institute course. However, the view that linked courses should also be treated as a low priority, and only started when technical education for industrial personnel has been satisfied, is also correct.

There is no doubt that, during the 1970s, good cooperation and close ties developed between the technical institutes and the prevocational schools. Similar, though less strong links were also established between the technical institutes and some of the technical schools, although many of the technical school leavers were looking more towards the Polytechnic or the universities. A comparatively large number of the grammar type schools, many of which have included few, if any, technical subjects in the curriculum in the past, have shown little interest in the technical institutes or indeed in technical education. This applies especially to the more elitist aided schools which, in the past, because of their reputation, were able to "cream off" the better primary school leavers.

A principal of a technical institute wrote;

> Cooperation with schools (and technical institutes), surprisingly considering that we are both in the same Government department, has probably been less effective (than cooperation with the Polytechnic and other tertiary institutions) but there are long standing historical reasons for this.[1]

These reasons are very much concerned with the status of technical education in Hong Kong, a subject which is fully dealt with in Chapter 6. W.S. Lucas, the Principal Inspector (Technical Subjects), however, did not agree that the technical

---

1. H. Cameron, Principal, Lee Wai Lee Technical Institute, LWLTI/1/1 (23 June 1980).

institutes were blameless and felt that they could have done more to assist in the public relations exercise that was necessary to ensure acceptability of technical subjects into schools.[1] In contrast, however, the principals felt that their institutes had done a great deal by awarding advantageous weightings to applicants for good Hong Kong Certificate of Education Examination results, in the selection process, and for giving exemptions to students for units adequately covered in secondary school.

The Hong Kong Polytechnic and the technical institutes

The Hong Kong Polytechnic, situated at Hung Hom Kowloon, is a typical example of "academic drift" (meaning an educational institution which, over a period of time, gradually introduces more higher level courses until it becomes a higher level institution). It was originally established as the Hong Kong Trade School, in 1937 (see page 14), was renamed "Hong Kong Technical College" in 1947, and moved from Wood Road, Wanchai to Hung Hom in 1957.[2] The Polytechnic formally came into being on the 1 August 1972 when the Polytechnic Board of Governors assumed responsibility for the new institution, taking over the campus of the former Government run Technical College and embarking on a programme of expansion to bring the enrolment of full-time day equivalent students to 8,000 and part-time evening students to 20,000 by 1978.[3] In 1971/72, the last year before the Technical College became the Polytechnic, it had 1,700 full-time, 740 part-time day, and 9,304 part-time evening students on roll.[4] The Polytechnic is financed through the University and Polytechnic Grants Committee, an arrangement which is thought to be unique to Hong Kong.[5]

---

1. (14)ED(TE) 116/2/1 (April 1980).
2. Opening Ceremony of the New Technical College by His Excellency the Governor, Sir Alexander Grantham, GCMG, (2 December 1957), pp.3 to 7.
3. Opening Ceremony of the Polytechnic's first new Building (26 October 1976) p.2.
4. Polytechnic prospectus 1975/76, p.20.
5. Opening Ceremony of the Polytechnic's first new Building, op. cit. p.3.

The 1978 White Paper stated that, by the early 1980s, when the expansion programme had been completed, the Polytechnic would accommodate about 12,000 full-time equivalent students and provide for a total student body of nearly 30,000.[1] The intention has always been that the Polytechnic and the technical institutes should complement one another and although, in many areas, the division has by no means been clear cut, attempts have been made to divide up the work.[2] Consequently, all craft work has been undertaken by the technical institutes and all technologist work has been undertaken by the Polytechnic, or by the two universities. However, in the field of technician programmes some overlap has occured. Most of the higher-technician courses were run at the Polytechnic and two that were run by the technical institutes, namely construction and electronics, were transferred to the Polytechnic, commencing in 1977.[3]

The main area of overlap has been at technician Diploma and Certificate level with both the Polytechnic and the institutes running similar courses in some disciplines. As a result, there has been some wasteful competition. Where similar courses are available in both the Polytechnic and in a technical institute, would-be students usually apply to both institutions. Then, if offered places in both, they will normally accept a place in the higher level institution. The 1977 Working Party Report on Senior Secondary and Tertiary Education likened the situation, of the students on similar courses in the Polytechnic and the technical institutes, to first class and second class citizens.[4]

A statement of intent was made, by the Government, that some of the Polytechnic's Diploma and Certificate

---

1. The Development of Senior Secondary and Tertiary Education, op. cit. p.16, para. 6.9.
2. H. Cameron, Technical Institutes/Polytechnic Levels of Work and Division of Courses (28 August 1976), ED(TE) 2/6704/67 III, passim.
3. Working Party Report ... op. cit. p.60, para. 4.40.
4. Ibid.

programmes should be taken over by the technical institutes.[1] As a result, various programmes of transfer for these courses were drawn up.[2] It was hoped, by the Polytechnic/Technical Institute Joint Consultative Committee, that these transfers could commence in 1979 but they were delayed because the institutes lacked resources including finance. It was later decided, providing the resources were forthcoming from the Government, that the transfers should commence in September 1981 and would continue, on an annual basis, until September 1984. During this four-year period 857 full-time, 507 part-time day release and 4,507 evening only student places would be transferred from the Polytechnic to the technical institutes.[3]

The transferring of these courses, which has commenced as planned, should overcome unnecessary competition between the Polytechnic and the technical institutes in several fields, at Diploma and Certificate level. In turn, the running of more technician courses will enhance the status of the institutes in the eyes of the public and the Government has agreed to allow them to recruit more higher-level staff and to purchase additional equipment, and the Polytechnic will be able to concentrate a greater proportion of its work at the higher technician and technologist levels.[4]

When the Morrison Hill Technical Institute and the Technical College were both Government institutions within the Education Department, there were formal links between the two. However, as we have seen, in August 1972 the Technical College was renamed "Polytechnic" and became an autonomous institution. As a result, it was no longer within the Education Department. In spite of this, close links have always been maintained between the Education Department and

---

1. The Development of Senior Secondary and Tertiary Education, op. cit. p.16, para. 6.9.
2. Interim Report, Ad hoc Working Party on Division and Rationalisation of Courses between the Polytechnic and the Technical Institutes (27 April 1978), AS548/278 (revised), passim.
3. (6) ED(TE)124/3 (August 1980).
4. The Development of Senior Secondary and Tertiary Education, op. cit. p.16, paras. 6.8 and 6.9.

the technical institutes on the one hand and the Polytechnic on the other. A complex committee structure exists which started from a single liaison committee in 1973.[1] As at 1981, the committee structure consists of the Liaison Committee at the apex with the Director of Education and the Director of the Polytechnic as joint chairmen.[2] Below this, at the second level, is the Joint Consultative Committee and, at the base of the pyramid, 16 subcommittees covering the main disciplines or groups of disciplines common to both the technical institutes and the Polytechnic. Moreover, ad hoc working parties have been set up as required. In addition to these formal links and lines of communication, informal contacts between the Education Department and the institutes, on the one hand, and the Polytechnic on the other appear to have been good.[3] Indeed, it is doubtful if they could have worked together more closely.

Links between educational institutions

There is no doubt that a serious attempt has been made to develop an educational system which is a unity from top to bottom, thus giving young people the opportunity to progress from one educational level to another as they wish and as they are able. The territory is in an advantageous position to do this because it is small, compact, adaptable and has developed a new and extended system of education in the 1970s.[4] The Governor, Sir Murray MacLehose, said at the first presentation of awards of the Hong Kong Polytechnic in the City Hall, on 1 November 1973 :

> We hope to see a natural link developing between the prevocational schools, the secondary technical schools and technical colleges (sic) with the Polytechnic at the apex of this pyramid ...[5]

---

1. Polytechnic/Education Department Liaison Group (30 September 1976), AS 652/576.
2. Education Department and Polytechnic Liaison Complex (27 April 1978), AS 735/578.
3. H. Cameron, Principal, Lee Wai Lee Technical Institute (23 June 1980), LWLTI/1/1, para. 2.
4. J.R. Clark, Report on the Organisation of the Education Department and Procedural Considerations (October 1969), p.5, para. 27.
5. Information circular 136/73, 9/4/3393/71 (1 November 1973).

He went on to say that this would give an increasing number of the more able students the opportunity to work up the ladder to finish their studies at the Polytechnic.

It is interesting to see how this idea worked out in practice. As at October 1977, of the students who were admitted to technician programmes in the four technical institutes (Lee Wai Lee Institute was not then established), 61 per cent (3,918) came from secondary grammar schools, 18 per cent (1,156) from secondary technical schools and 21 per cent (1,349) from other types of schools.[1] The last category included students who came from some other secondary or post-secondary institution or the Adult Education Section of the Education Department. Of the students who joined technical institutes at craft level in 1977, 62 per cent (8,463) came from secondary grammar schools, 6 per cent (819) came from secondary technical schools and 32 per cent (4,368) from other types of schools such as prevocational and secondary modern schools.

Thus, it can be seen that far more students came from secondary grammar schools than from technical schools. It must be remembered, however, that, as at March 1978, of the 401 secondary and matriculation schools which operated during the day, and of the 157 which operated at night, only 18 schools were classified as technical schools the remaining being grammar schools.[2] It is estimated that only about 6 per cent of the grammar school leavers joined technical institute technician courses whereas about 50 per cent of technical school Form Five leavers join technical institute courses of one kind or another. However, with the gradual introduction of more technical subjects into grammar schools, there is not now the same rigid demarcation between them and technical schools as in the past.

It has always been considered important that qualified and capable technical institute leavers should be able to further their studies at the Polytechnic. The 1977 Working

---

1. (206)ED(TE)1/6704/73 (October 1977).
2. Director of Education, 1977 - 78 Annual Summary, p.42 and 51, Tables Ia and IIIa.

Party on Senior Secondary and Tertiary Education recommended that the Polytechnic should give equal consideration, for admission to Higher Certificate Courses, to both technical institute and Polytechnic Certificate holders.[1] The Hong Kong Training Council was also concerned about the same issue and some assurance that this would occur was given by the Director of the Polytechnic.[2] An estimate of the numbers leaving institutes in 1980, and furthering their studies at the Polytechnic, amounted to 470 full-time, 334 part-time day release and 278 evening only students, giving a total of 1,082, classified according to their mode of study in the institutes. However, some of the estimated 470 full-time institute students would go on to study on a part-time basis in the Polytechnic. In the same way, some of the estimated 334 part-time day institute students would go on to study on an evening only basis in the Polytechnic.

Details of the numbers of full-time craft and technician students continuing their studies elsewhere, on completing their institute courses, are as follows.[3]

---

1. Working Party Report, op. cit. p.60, para. 4.40.
2. ED(TE)112/1 (27 March 1980).
3. (36) ED(TE)114/6II (January 1981).

Table 14 : Numbers of Full-time Technical Institute Leavers Continuing Their Studies in Various Educational Institutions in 1980

Institution	Mode of study	
	Full-time	Part-time
Technical institutes	49	380
Polytechnic	31	274
Secondary schools	33	68
Evening Adult Education Centres	-	31
Others	25	61
Total	138	814

The actual numbers of full-time technical institute leavers continuing their studies increased from three entering full-time Polytechnic courses and 44 entering part-time courses (total 47) in 1975, to 31 entering full-time and 274 entering part-time courses (total 305) in 1980.[1] No similar figures are available for part-time technical institute leavers. As is to be expected, by far the majority of full-time technical institute leavers take up employment and continue their studies on a part-time (either day-release or evenings only) basis. Some craft students feel that their prospects are limited as craft apprentices and decide to re-enter a secondary school, normally a private one. Although the increase is sizeable the figures are still small but it must be remembered that by far the major part of the work of the technical institutes is at craft level and that only technician students go on to study in the Polytechnic. As the institutes take over more Diploma and Certificate courses from the Polytechnic more students can be expected to proceed from the institutes to the Polytechnic to continue their studies.[2]

1. (50)ED(TE)2/4/15/6704/76II (May 1977).
2. Ibid.

Apprenticeships and the technical institutes

It is important that the apprenticeship system is examined in this thesis because it has had a marked effect on the build-up of part-time day student numbers in technical institutes. Apprenticeships are not new in Hong Kong and the Chinese have had a traditional form of apprenticeship, which originally included 72 trades, dating back many centuries.[1] Also, apprenticeships on British lines have been organised by the Hong Kong Government and by a few large British firms, the dockyards for example, for many years. In 1953, a recommendation was made that some form of legislation for apprenticeship training should be introduced to stimulate such training and to safeguard the welfare and interests of both employers and apprentices.[2]

The Hong Kong Government started a registered apprenticeship scheme in 1970, as recommended by the Industrial Training Advisory Committee, and this was a convenient time as it coincided with the opening of the Morrison Hill Technical Institute in its new premises. By this scheme, registration with the Department of Labour was on a voluntary basis and regulations were drawn up and documentation of apprentices was put on an official footing. In July 1976, the Apprenticeship Ordinance was enacted and 23 trades were designated later in the same year.[3]

The Ordinance provides for the regulation of the employment and training of apprentices in the designated trades,[4] its main purpose being to ensure that young people

---

1. Industrial Training Advisory Committee paper N.2B/66 (undated) (circa 1965).
2. Report on the Working Party on Organisation and Administration of National Vocational Training Programmes in Australia, Philippines and Japan, organised by : International Labour Office, Asian Field Office, Report compiled by Watt Hoi-kee (1953), Part V.
3. Guide to the Apprenticeship Ordinance 1976 and the Apprenticeship Regulations 1976.
4. A Career in Industry through Apprentice Training, Training Council Division, Labour Department (undated) (circa 1976).

in trades vital to Hong Kong's industries receive proper training and education which, in turn, ensures that industry obtains the adequate supply of skilled manpower needed for its continuing development. The Industrial Training Branch of the Labour Department of the Government is responsible for administering the Ordinance.

The idea of a more formal approach to the apprenticeship system had been debated for many years[1] and was a subject of discussion within the Industrial Training Advisory Committee. As we have seen, the Apprenticeship Ordinance designated 23 trades, covering approximately 30 per cent of the craft workforce.[2] In 1977, a further five trades were designated bringing about 60 per cent of the total workforce under the ordinance. Since 1977, nine more trades have been designated and, as at August 1, 1980, there were 37 designated trades all at craft level.[3] Any firm which employs an apprentice in any designated trade who is under 19 years of age must, by law, send him or her to a technical institute to attend a part-time day, craft course.

Most craft apprenticeships are of four years' duration, although if a student has studied a craft in depth in a prevocational school or has completed a one-year, full-time, basic craft course in a technical institute, he will normally enter direct into the second year of an apprenticeship and into the second year of a part-time day course in a technical institute.[4]

There was some feeling that the Apprenticeship Ordinance lacked teeth and so would not bring about a big increase in the number of apprentices.[5] It was argued that there were

---

1. A Report on Apprenticeship Systems by a Sub-committee of the Standing Committee on Technical Education and Vocational Training (1963); and A Report on an Enquiry into Apprenticeship and Other Similar Forms of Training in Hong Kong, 1962 by an Ad-hoc Sub-committee of the Standing Committee on Technical Education and Vocational Training.
2. Working Party Report ... op. cit. p.54, para. 4.24.
3. Information obtained from Apprenticeship Division, Department of Labour.
4. A Career in Industry through Apprentice Training, op. cit. p.3.
5. J.R. Devereux, The Future Role of Technical Institutes, (20 October 1976), p.2, para. 2.3.1.

loopholes for employers who did not favour apprenticeships and the part-time day release scheme and that most young people did not want to become craftsmen because of poor wages and lack of status in local society.[1] Some also felt that the Ordinance would not be implemented with too much vigour because of the Government's past general policy of non-interference in industrial matters. While it was true that some firms did employ apprentices who were over 18 years of age, so that they did not have to send them on part-time day courses in a technical institute, nevertheless there has been a rapid increase in numbers as Table 15 shows.[2]

Table 15 : Numbers of New Apprenticeship Contracts Signed with the Labour Department

Year	1970	1971	1972	1973	1974	1975	1976	1977	1978	1979
Number of new contracts signed	388	498	539	764	755	727	1502	2174	3954	5161

In 1978, 0.8 per cent of the full-time technician students and 50.7 per cent of the full-time craft students on leaving technical institutes, joined the Government apprenticeship scheme. These figures increased to 13.8 per cent and 55.7 per cent respectively the following year.[3]

When the Registered Apprenticeship scheme commenced, in 1970, it was on a voluntary basis, as a consequence the numbers in the first few years were comparatively small.

1. D.D. Waters, The Status of Craftsmen and the Popularity of Craft Courses in Technical Institutes (11 January 1978).
2. Paper HKTC/1-79 (March 1979), p.4.
3. (70) ED(TE)112/1/10 (9 June 1980).

In 1976, however, the Apprenticeship Ordinance was enacted and, as previously mentioned, certain trades were designated. As a result, there was a striking increase in the numbers of apprentices. Numbers went on increasing as more trades were designated. This increase is not, however, entirely due to compulsion. Table 16 shows that, as at October 1979, there were 7,190 apprentices in designated trades of whom 5,976 were attending related, part-time day courses in a technical institute. Of the remainder of the apprentices, the majority were of a low general educational standard and were attending evening up-grading courses although some were unable to cope with their institute studies and were not attending classes. In other cases, however, construction for example, there were more students attending part-time day classes than there were apprentices. In this case, trainees attended from the Construction Industry Training Centre and they were not yet registered apprentices.

Table 17 shows that, as at October 1979, there were 596 registered craft apprentices and 792 registered technician apprentices in non-designated trades. This means that, of the total number of apprentices, about 84 per cent were in designated trades where compulsion, by law, was in force. The remaining 16 per cent were at technician level, where no trades had been designated, or in trades at craft level which had not been designated. Thus, 16 per cent attended on a voluntary basis. By June 1980 the number of registered apprentices had increased to 7,600, including 525 craft and 886 technician apprentices in non-designated trades.[1] Thus, 84 per cent of the apprentices were in designated trades and 16 per cent in non-designated trades. It is also of interest to note that, as at 1 June 1980, of all apprentices in both designated and non-designated trades, 8,525 or 90 per cent were at craft level while the technician apprentices, all in non-designated trades, numbered 886 or 10 per cent.

---

1. (4)AD/COR/ED III (25 June 1980).

Table 16 : Comparison of the Numbers of Registered Apprentices in Designated Trades and the Numbers of Students in Relevant Part-time Day Courses in Technical Institutes

Discipline	Numbers of registered apprentices in designated trades as at October 1979	Numbers of students in relevant part-time day courses in technical institutes as at October 1979
Clothing (Clothing Machine Mechanics)	69	60
Construction	244	851
Electrical		
(a) Lift	271	175
(b) Radio/television	67	65
(c) Electrician and others	771	729
Mechanical		
(a) Vehicle mechanic and electrician	1,558	1,044
(b) Vehicle-body builder/ painter	560	350
(c) Air-conditioning and refrigeration	454	313
(d) Tool and die	458	206
(e) Mould and die	762	270
(f) Mechanical fitter, machinist and others	1,295	1,270
Printing	347	324
Textiles	334	319
Total	7,190	5,976

Ref. : ED(TE) 120/2
c.c. ED(TE) 114/1

Table 17 : Comparison of the Numbers of Registered Apprentices in Non-designated Trades and the Numbers of Students in Relevant Part-time Day Courses in Technical Institutes

	Discipline	Numbers of registered apprentices in non-designated trades as at October 1979	Numbers of students in revelant part-time day courses in technical institutes as at October 1979
Technician Level	Automobile	67	98
	Clothing	125	156
	Construction	239	461
	Electrical	97	34
	Electronics	99	81
	Mechanical	118	108
	Shipbuilding	5	19
	Textiles	16	-
	Others	26	317
	Sub-total	792	1,274
Craft Level	Aircraft	236	110
	Clothing	43	49
	Electronics	46	141
	Mechanical	123	52
	Shipbuilding	73	131
	Gas	60	-
	Others	15	187
	Sub-total	596	670

Ref. : ED(TE) 120/2
c.c. ED(TE) 114/1

The Labour Department has done a great deal to publicise the apprenticeship system by giving talks in secondary schools, by issuing literature, by conducting seminars and stageing exhibitions, by advertising and using the mass media.[1] In turn, prominent industrialists have strongly backed the scheme.[2] The Hong Kong Training Council, including all its Industrial Training Boards, as well as the major trade associations in Hong Kong have endorsed and recommended it.

It appears that, by comparison, the system in Singapore includes the registration of apprentices on a voluntary basis, much like the system which was in force in Hong Kong from 1970 to 1976.[3] It is also of interest to note that the Commonwealth Seminar, which was held in Hong Kong, supported the establishment of formal apprenticeship systems at both craft and technician levels.[4]

Although apprenticeships are open equally to both sexes the number of female apprentices has always been small and relates to the numbers of females attending technical institutes, details of which may be seen in Chapter 2.

Table 18 : Numbers of Female Apprentices, as at 1 October 1979, Registered with the Labour Department.[5]

Trade	Technician	Craft	Sub-total
Clothing	8	6	14
Construction	2	0	2
Electronics	1	0	1
Printing	0	3	3
Textiles	1	0	1
Total	12	9	21

1. Paper HKTC/1-79 (March 1979).
2. S.L. Chen, The Key to Economic Survival, seminar at Hong Kong Polytechnic (4 May 1978), p.5.
3. Bray and Leung, Report on a Study Tour to Singapore, op. cit. pp.6 and 7.
4. Technical Education and Industry, Report of a Commonwealth Regional Seminar/Workshop, Hong Kong, 28 September - 7 October, 1976, Commonwealth Secretariat, p.4, para. 5.
5. (72)ED(TE)108/8/13 (18 September 1979).

Table 18 reveals that females represented only 0.12 per cent of craft and 1.9 per cent of the technician apprentices.[1] The main reason for so few girls taking up apprenticeships, it would appear, is traditional bias. However, if it were decided to extend apprenticeships to cover commerce and the service sector, unlike Britain, but as one finds in certain European countries, then the numbers of female apprentices in Hong Kong would increase considerably.[2]

There is no doubt that the Apprenticeship Ordinance has brought about a significant improvement in apprentice training by improving the educational standard of the apprentices and by making them attend properly organised courses.[3] Also, the overall implications of the Ordinance have had far-reaching, beneficial effects on apprenticeships, both qualitative and quantitative, in designated trades and, to a lesser extent, in non-designated trades.[4] A sound system of part-time technical education has been introduced in technical institutes which complements the apprentices' on-the-job training. In addition, the standard of training has improved, with many of the larger firms employing training officers, although standards in the smaller and less enlightened firms are still inadequate.[5] A sizeable Apprenticeship Division has also been established in the Government Labour Department to assist and advise industry.

It has been suggested that there might be a need to

---

1. Ibid.
2. European Apprenticeship, CIRF Monographs, vol. 1, no. 2, International Labour Office (Geneve, 1966), passim.
3. D. Pun, Acting Principal, Technical Teachers College, (10)TTC/99L/1 (24 July 1980), p.2.
4. J.N. Henderson, Commissioner for Labour, Apprenticeship (Amendment) Bill 1980, Hong Kong Legislative Council Official Report of Proceedings (25 June 1980), pp.914 and 915; and J.N. Henderson, Commissioner for Labour, address, Opening of the Experts Meeting on Apprenticeship, sponsored by the Asian and Pacific Skill Development Programme, International Labour Organisation (19 December 1980); and Warner S.Y. Yeh, speech at Rotary Club of Kwun Tong, Hong Kong Domestic Export Growth and Skilled Manpower (7 September 1977), passim.
5. Report on Diversification, op. cit. p.239.

raise the upper age limit, which as at August 1980 stood at under 19, if more young people complete 11 years of general education in the future.[1] In the same way, it has been suggested that more trades may need to be designated, including some at technician level.

However, not everyone has supported some of the measures that have been imposed and Williams, for example, has been more in favour of the use of incentives than compulsion :

> ... some of the approaches I have heard being discussed in technical and industrial training circles (... designate more industries for apprenticeships, raise the age of compulsory apprentice registration, force industry to contribute to off-the-job training by imposing levies) fill one with a certain foreboding, chiefly because they call forth so much effort by Government to enforce and so much effort by industry to evade![2]

Williams also prefers a credit-unit or module approach to apprenticeships which would be more attractive to industry and give greater mobility and flexibility. It has been argued by others for many years that the traditional apprenticeship system should be streamlined and modernised and that it should provide age flexibility for entry and qualifications based on proof of skill rather than the length of time served.[3] Generally speaking, however, the apprenticeship system in its traditional form is now firmly entrenched and appears to be working well with few grumbles from industrialists. Without such a compulsory system, numbers on part-time day courses in institutes would be much smaller and industry would not have such a technically

---

1. Francis Y.H. Tien, Chairman, Hong Kong Training Council, HKTC/COUN/MTG(9) (28 February 1978).
2. Williams, Manpower Forecasting as a Basis for Educational Planning in Hong Kong, op. cit. Paper 1.
3. Industrial Training in Turmoil, Management Today (England, January 1981), pp.105, 106, 108 and 110.

well-educated labour force. Although the compulsory system may not have worked in many countries it has generally worked well in Hong Kong.

Industrial training centres and the technical institutes

In September 1975, following the introduction of the Industrial Training (Construction Industry) Ordinance and the Industrial Training (Clothing Industry) Ordinance, His Excellency the Governor appointed the Construction Industry Training Authority and the Clothing Industry Training Authority.[1] These two bodies are empowered to impose levies on building and civil engineering contracts and on exporters of clothing manufactured in Hong Kong, respectively, for the purpose of establishing and running training centres in key construction trades and for clothing employees.

The Construction Industry Training Centre was completed in 1977 and the full-time craft trainees are granted day-release to attend the Haking Wong Technical Institute for complementary technical education appropriate to their trade.[2] The electrical industry was also using this Centre, on a temporary basis, for off-the-job training. In 1979/80, 60 trainees attended day-release classes at the Kwun Tong Technical Institute. The Clothing Industry Training Centre was also completed in 1977 and is mainly concerned with the training of operatives.[3] Some courses for technicians have also been run, however, and these trainees attend the Kwai Chung Technical Institute on a part-time day release basis for their complementary technical education. During the 1979/80 academic year, 29 such students attended.

Although only two industrial training centres had been established up to 31 August 1980, there is no doubt they have had a marked effect on the technical institutes, especially

---

1. Construction Industry Training Authority, annual reports; and Clothing Industry Training Authority annual reports.
2. Opening Ceremony of the Construction Industry Training Centre (booklet) (17 August 1977).
3. Official Opening Ceremony of Clothing Industry Training Centre (booklet) (19 October 1977).

the Construction Industry Training Centre which has sent over 600 of its trainees every year to a technical institute for day-release classes. The purpose of the training centre is to provide off-the-job, full-time, industrial training and the task of the technical institute is to provide complementary technical education. Very few firms run off-the-job training schemes themselves, a good example being the scheme set up by "Sonca".[1]

As the 1977 Working Party on Senior Secondary and Tertiary Education pointed out, it is essential that training centres and institutes have an effective and profitable working relationship by establishing close liaison.[2] In practice, this seems to have been the case. Indeed, given the success of the first centre, the Construction Industry is opening a second centre in 1982. Also, the electrical, electronics, plastics and textiles (weaving) industries are all considering setting up industrial training centres but their proposals have been delayed because they have been awaiting a Government decision on whether industrial training is to be financed from a levy or general revenue. The fact that other industries are likely to follow the lead given by the first two centres is a good indication that they have been successful.

Credit-units and the Technician Education Council

A system of credit-units, for technician study programmes, was introduced into the technical institutes with effect from September 1977.[3] All such programmes are geared specifically to local needs. The 1977 Working Party on Senior Secondary and Tertiary Education was strongly in favour of such a scheme and said that it would enable a student, who had successfully completed a course-unit at one institution, to move to another where he would be credited with the completion

---

1. Sonca Industries Ltd, Employment Opportunities (November 1977).
2. Working Party Report, op. cit. p.55.
3. Technical Institutes, Policy for the Introduction of Technician Programmes of Study and a Credit-unitary System (July 1976), p.3.

of that unit without the need for repetition.[1] The Report went on to say that the system would greatly enhance the mobility of students between institutions by giving credit for previous attainment and by providing opportunities for any student to make rapid progress to the maximum of his ability. The 1977 Green Paper stated that :

> One way in which courses (in technical institutes) are being broadened and flexibility enhanced is through the development of credit-unit programmes of study.[2]

The flexibility of the credit-unit system provides a number of advantages to students, including the fact that the same qualification can be made available both by part-time and by full-time study.[3] Within limits students may study at their own pace, credit may be given to a student by virtue of his previous educational achievements in a secondary school, units do not necessarily have to be studied in a set order, students have some flexibility in planning their own studies, and credit can be given for each unit successfully completed even if the entire programme is not completed.

The 1978 White Paper on the Development of Senior Secondary and Tertiary Education reiterated that a common credit-unit system, in both the technical institutes and the Polytechnic, would facilitate the transfer of students from one type of institution to another, and various other people spoke in favour of the introduction of credit-units including legislative councillors and visiting educational advisers.[4] Williams emphasised the great need, in a rapidly changing place like Hong Kong, for a flexible system of courses so that lead-times could be cut wherever possible. In this

---

1. Working Party Report ... op. cit. pp.56 and 57, paras. 4.29 to 4.31.
2. Senior Secondary and Tertiary Education ... op. cit. p.28, para. 7.8.
3. (50)ED(TE)110/22 (1 May 1979).
4. The Development of Senior Secondary and Tertiary Education, op. cit. p.17, para. 6.13; and James M.H. Wu, Legislative Council meeting (5 July 1978); and P.R.C. Williams, Manpower Forecasting as a Basis for Educational Planning in Hong Kong, Paper 1 (14 March 1978), para. 21.

way, it is easier to switch into something slightly different as opportunities and needs change. Students can also "drop in and out" of courses retaining credits already obtained under this system.[1] He also contended that the credit-unit system would offer higher status than the present apprenticeship system and was of the opinion that it would result in less rigid divisions and more graduations between craft, technician and technologist levels with more"halfway houses". He felt that an interlocking course structure would not create perpetual students (a not uncommon phenomenon in Hong Kong) provided cost and benefits were brought into line.

Not everyone, however, was completely in favour of introducing credit-unit programmes for technician studies and, when the Hong Kong Training Council was invited to comment on the proposal to introduce such a scheme into the technical institutes, various industrial boards and committees of the Training Council raised a number of reservations.[2] These included concern that the credit-unit system would result in a lower practical work programme content, that lower entry qualifications would be accepted and that the hours of teaching on programmes would be reduced. The Hong Kong Training Council also stressed the need for uniformity between the technical institute technician programmes and those of the Polytechnic so that, in common areas, awards would be compatible. The Council also wanted the Polytechnic to give some assurance that it would accept institute Certificate holders on to its Higher Certificate programmes and, if it would not do this, then it recommended that the technical institutes should be allowed to run their own Higher Certificate programmes.[3] An assurance was given by the Director of the Polytechnic that he would indeed do this providing sufficient places were available.[4]

---

1. Ibid.
2. (15)HKTC/COUN/MTG/7 (11 March 1977).
3. Ibid. p.2, para. (IV).
4. (69)ED(TE)106/74^{II} (22 January 1977).

Since the introduction of credit-units into technical institutes in 1977, no one has spoken against them and one acting principal has stated that he considers the introduction of credit-units to be one of the most noteworthy achievements of the institutes in the 1970s.[1] The acting Principal of the Technical Teachers College concurred and felt the system had provided greater flexibility.[2]

Even though a decision was made in 1976 that technician programmes in technical institutes should be run on a credit-unit basis, it was not at first decided that these programmes should be validated by the Technician Education council (TEC) in Britain, which was set up in 1973, to provide a unified national system of courses and awards for technician studies.[3] A distinctive feature of these courses is that they are based on programmes of study comprising a number of units.

The advantages and disadvantages of Hong Kong having technician programmes of study validated by TEC, as opposed to the Territory running its own credit-unit scheme, are briefly as follows. Hong Kong, as we have seen, has had a number of its technical education courses recognised by British institutions in the past; it understands the United Kingdom system and it seemed logical that the technical institutes should seek recognition for their credit-unit programmes from TEC.[4] Such validation gives not only international recognition to students who pass the examinations, but also exemption from academic requirements to a number of British professional institutions. In addition TEC, with its research and development programme, is able to provide a great deal of useful back-up material such as standard units and other literature. Some people contended, however, that Hong Kong should devise its own credit-unit system and should not depend on Britain, although TEC has always said that programmes in Hong Kong may be drawn up specially to suit local needs.[5] Also, in having programmes

---

1. H.K. Yung, acting Principal, Kwun Tong Technical Institute, (25 June 1980), (33)KT/132/13.
2. D. Pun (24 July 1980) (10)TTC/99L/1.
3. Be Somebody in British Industry become a Technician, Technician Education Council (undated), passim.
4. (78)ED(TE)1/133/73II (March 1978).
5. Ibid.

validated by TEC, a student is required to pay additional fees (HK$18.50, in 1979/80, in two instalments for a standard Diploma programme) before he is entitled to a TEC award.

Once a tentative decision was made that the programmes in technical institutes should be validated by the Council, a policy document to this effect was prepared.[1] Later, another policy document was drawn up to cover both the technical institutes and the Polytechnic.[2] It was generally agreed that the new system would be more complicated to administer, owing to its essentially flexible character, and that more administrative staff would be required.[3] On the other hand, there would be savings in other areas: for example, not all students would need to study all units, there should be less student-wastage, and resources should be more efficiently utilised in the institutes concerned. It was estimated that the increased administrative cost of implementing the new system would be of the order of two to three per cent.[4]

Before a final decision was made as to whether the programmes should be validated by TEC its Deputy Chief Officer, Frank Fidgeon, came to Hong Kong in November 1977. (The Chief Officer, F.G. Hanrott, had visited Hong Kong in March in the previous year).[5] The final decision was made shortly after Fidgeon's visit and recognition was later backdated, with regard to some programmes, to September 1977. In order to prepare technical institute staff, seminars were run by the Technical Teachers College.[6] Fidgeon also visited Hong Kong again, in December 1979, and assisted the Technical Teachers College in running two more seminars, one for moderators of TEC programmes and the other for senior staff of technical institutes and the Polytechnic.[7]

---

1. See note 3 on p.110.
2. Hong Kong Polytechnic/Technical Institutes, Education Department, Hong Kong Government, Joint Guidelines on a Credit-Unitary System for Technician Study Programmes at the Polytechnic and the Technical Institutes (April 1977) (77)ED(TE)1/18/6704/74.
3. Working Party Report ... op. cit. pp. 56 and 57, para.4.30.
4. Ibid.
5. (5)ED(TE)132/3 (25 July 1979).
6. The Planning of Technician Study Programmes at Certificate/Diploma Level (25 November 1978).
7. Seminar for Educators and Moderators of TEC Programmes in Hong Kong (4 December 1979).

As at August 1980, 17 technical institute programmes had been approved and six conditionally approved by TEC.[1] Disciplines comprised building, civil engineering, ship-building and repairs, mechanical and production engineering, motor-vehicle engineering, textiles, electronics and communications engineering, and electrical engineering. Also, during the 1979/80 academic year, the total number of technical institute students registered with TEC amounted to about 1,400. This represented 90.5 per cent of the total number of student on roll, in TEC validated programmes, at the start of the academic year. Bearing in mind that there was some student wastage, especially in evening classes, the actual percentage of students registering with TEC would be higher. The remaining 9.5 per cent of the students followed the same courses but received technical institute certificates and diplomas. Students' fees collected amounted to about £15,000 in 1979/80. Hong Kong was the first place outside Britain to have courses validated by TEC.[2] It is also interesting to record that TEC examined a total of 953 programmes, up to the end of 1978 and, of these, 819 were approved.[3] In the case of the technical institutes in Hong Kong, as at April 1980, all 14 programmes submitted had been approved, or provisionally approved, by TEC.[4] The views of the various industries were sought before programmes were introduced into institutes.[5] The decision to validate the programmes of the technical institutes by TEC does not appear to have attracted major criticism neither from staff, students, industrialists nor the general public, although considerably more work by staff has been necessary. Its chief virtue, in the words of the acting Principal of the

---

1. (147) ED(TE)110/18 (14 August 1980).
2. (88) ED(TE)110/18/2 (21 May 1980); and Industry course scores a First, South China Morning post (11 December 1979).
3. TEC News, no.12, (April 1979), p.2.
4. D.D. Waters, speech, Don Bosco Secondary Technical School Opening Ceremony of Open Day (14 April 1980).
5. Typical example : printing (17 October 1979) ED(TE)110/22.

Technical Teachers College is that "the system calls for validation of awards to internationally accepted standards".[1]

The 1977 Working Party on Senior Secondary and Tertiary Education recommended an extension of the credit-unit system be considered, particularly in the use of modules for craft courses, which would allow high-flyers to proceed to technician level.[2] Limited use was already being made of modules in technical institutes, in the period under review : for example, the Construction Department at Morrison Hill Institute had introduced a modified module scheme, in 1973, for some evening craft courses.[3] In due course an interim report was drawn up, and a final report was later prepared which provided guide-lines for heads of departments in institutes and other staff concerned with the preparation of syllabuses and the introduction of modules.[4] The Departments of Construction, Electronics and Clothing introduced modules in September 1981 and the remainder of the Departments are expected to introduce them for the 1982/83 academic year.

Handicapped students in the technical institutes

Before September 1979, technical institutes admitted only a few handicapped students on an ad hoc basis. This policy was changed, to conform with the 1977 Working Party Report on Senior Secondary and Tertiary Education, which recommended,

> ... more advantage should be taken by mildly handicapped students of institute courses, and that they should be made more fully aware of their opportunities in this respect.[5]

---

1. D. Pun (24 July 1980) (10)TTC/99L/1.
2. Working Party Report ... op. cit. pp.57, para. 4.31.
3. The Morrison Hill Technical Institute, draft, The Basic Pattern of Craft Courses (18 April 1969), passim; and (24)ED(GR)2/18/66492/68 (24 October 1972).
4. Sub-Committee on Course Structure (Technical), Interim Report (19 May 1978); and (39)ED(TE)108/3/4 (22 January 1980).
5. Working Party Report ... op. cit. p.50, para. 4.16.

The 1977 Green Paper on Senior Secondary and Tertiary Education, which was based on the Working Party Report, added that;

> It is highly desirable that students with mild physical handicaps should have the facilities they require to enable them to receive technical education.[1]

As a direct result of the above recommendations, the Lee Wai Lee Technical Institute, which was then under construction, was modified by building ramps and installing a lift and larger toilets, complete with handrails, making them suitable for wheelchairs. A new Section, within the Technical Education Division of the Education Department, which is responsible for technical education for the handicapped, was established in 1979. This Section, comprising four staff, coordinates and assists the technical institutes in the handling of such students.

As a result of these developments, new avenues are being opened for secondary school leavers who have disabilities.[2] Blind or deaf students are now able to follow certain courses with the help of resource teachers, who, being specially trained to help the handicapped, work alongside the classroom teacher when required. During the 1979/80 year the role of resource teachers in institutes was filled by staff from the Special Education Section of the Education Department. However, as the number of disadvantaged students increases, it will be necessary for the institutes to recruit their own resource teachers. As regards persons suffering severe physical handicaps such as paraplegia, congenital deformity of the spine, effects of poliomyelitis and loss of limbs; it is not possible to distinguish clearly between those categories which can or cannot follow courses since much depends on the degree of

---

1. Senior Secondary and Tertiary Education A Development Programme over the Next Decade, op. cit. p.29, para. 7.10.
2. Working Party Report ... op. cit. p.50 and 51, para. 4.16.

disability, in each case, rather than the nature of the handicap itself.[1]

Those disadvantaged students who are capable of pursuing a regular course in a technical institute are integrated into normal classes and many eventually obtain craftsman or technician status. For those who are unable to join a technical institute because of their severe disabilities, skilled or semi-skilled training is provided in the Government run, World Rehabilitation Fund Day Centre, and in similar centres run by the voluntary agencies. The World Rehabilitation Fund Day Centre was transferred from the Government, Social Welfare Department to the Education Department in August 1980. It is now managed by the Technical Education Division.[2]

In a 1978 International Labour Office Organisation Report, Willi Momm said many of the severely disabled, who fulfil normal technical institute educational requirements for admission, are not able to undertake the full range of training because of their handicaps.[3] In order to ascertain the extent of an applicant's disabilities, a panel of experienced staff has to exercise considerable care in the selection process for admission to an institute course. Moreover, the question of whether the would be student can be placed in industry, on completion of the course, has also to be considered. In the past, industrialists have not been too receptive to the idea of employing the handicapped, sometimes because of economics (for example, often special facilities are required such as ramps or special toilets), but also because of local prejudices against handicapped people. Similar views have been taken by staff of technical education institutions in the past. However,

---

1. Ibid.
2. World Rehabilitation Fund Day Centre, Tenth Anniversary (5 September 1968 - 1978), passim.
3. Technical Memorandum to the Government of Hong Kong on the Development of Vocational Rehabilitation Services in Hong Kong (Bangkok 1978), p.20 and 21.

by education and greater publicity, the views of the public are slowly changing.

As previously mentioned, the Lee Wai Lee Technical Institute was modified, while under construction, so that it could accommodate the physically handicapped. Of the other four institutes, none has a passenger lift, but all except the Morrison Hill Institute have goods lifts which may be used for students in wheelchairs. The lifts cannot, however, be operated by the disabled and need an able-bodied attendant.[1] Modifications to the four technical institutes, in order to be able to accommodate the more severely physically handicapped, include the building of ramps instead of steps, the widening of doorways to take wheelchairs, special handrails, lever-control taps and emergency "buzz" systems in toilets, and the installation of passenger lifts. At 1980 prices, it was estimated that these alterations would cost from $422,000 to $564,000, depending on the institute.[2] With the benefit of hindsight, this work could have been done more easily and cheaply when the institutes were built, but it must be remembered that there was not the same emphasis on technical education for the handicapped then as is the case today.

During the 1979/80 academic year handicapped students were enrolled and integrated, together with the able-bodied, into the same classes. This was the first year that there was any coordinated effort to enrol disadvantaged students into institutes. The Technical Education Division, including technical institute staff, was assisted by the Special Education Section of the Education Department as well as by the Government Social Welfare Department, in the selection of students and with counselling and similar activities. The Labour Department helped with the placement of students at the end of the institute year.

---

1. Report on Practical and Vocational Training for Handicapped Children, Working Group on Technical Institutes and other Training Institutes, Appendix IV (11 July 1978), p.1.
2. (55)ED(TE)112/1/2 (24 June 1980).

A total of 46 applications was received from handicapped, would be students, in the summer of 1979, and 41 were invited to sit entrance examinations and/or to attend interviews. Of these, a total of 18 students was admitted to the five institutes. In addition, one handicapped student continued his studies from the previous year.[1] Subjects studied by the various students included mechanical, electrical and civil engineering, printing, clothing, design and commercial subjects. Five of the students attended technician courses and the remainder craft level courses. Four students were deaf or partially hearing, two were blind or partially sighted and the remainder were physically handicapped. Of these, two left their institutes of their own accord during the course of the year, one to start his own business and the other to become a clerical officer in Government service. Of the remaining 17, 16 passed the end of year examination and were awarded their certificates or diplomas or were promoted to the second year of the course. One deaf student, however, failed in two subjects. Three students were able to secure employment immediately on the completion of their courses, and the remainder were registered with the Selective Placement Service of the Labour Department.[2] There is no doubt that the "horizons" of the institutes have been considerably widened by the policy of admitting such students and that numbers will build up in the coming years.

Conclusions

During the 1970s the number of pupils in secondary schools almost doubled, from 235,406 in 1970/71 to 463,798 in 1979/80. This meant that more school leavers were qualified and, in fact, did apply to join courses in technical institutes, as may be seen from Table 3 on page 51. In addition, more emphasis was placed on technical subjects in schools which again, in some cases, whetted the appetite of a pupil so that

---

1. Report on Disabled Students Applying for Technical Institute Courses, 1979/80 Session (undated), passim.
2. Rehabilitation Programme Plan (July 1978), p.163, para. 9.5.8.

he later wanted to join a technical institute course. As a result, at the end of the 1970s (even though the fifth institute had come into operation), institute courses were more heavily oversubscribed than ever before (see page 189), consequently, a large number of qualified applicants had to be turned away.

The technical institutes have maintained close formal and informal links with the Polytechnic since it was established in 1972, and this has paid dividends in better planning, coordination and cooperation between the two different types of institutions. A number of institute Certificate holders have gone on to Higher Certificate programmes, or other higher level courses, at the Polytechnic. Not all qualified institute leavers, however, have been able to continue their studies at the higher institution, in some cases because of a shortage of places. One difficulty has been that the Polytechnic, as the higher level institution with better facilities, does have a better ethos than the technical institutes and, as a result, students often enrol on an institute course, as second choice, when a similar programme exists in the Polytechnic. The position should improve when some of the Diploma and Certificate courses are transferred from the Polytechnic to the technical institutes in the first half of the 1980s. This will also help to avoid wasted administrative effort by institute staff who, on occasions, process application forms only to find that the applicants have joined the Polytechnic.

The enactment of the Apprenticeship Ordinance and the establishing of industrial training centres has had a marked effect on the numbers of part-time day students in technical institutes. As at August 1980, 37 trades had been designated under the Apprenticeship Ordinance and almost 8,000 part-time day students were on roll, in institutes, during the 1979/80 year. However, as at October 1979, only 21 apprentices were females. While not everyone agrees with the traditional apprenticeship system or the idea of designated trades and compulsory attendance by apprentices, at institutes, there is no doubt that the Apprenticeship Ordinance has brought

about a significant improvement in educational standards and in numbers of apprentices registered.[1] This has been the main factor in the rapid increase in institute part-time day student numbers. Serious consideration should now be given to the designation of more trades, including some at technician level.

In the same way, the two industrial training centres that have been set up have resulted in a better trained labour force, with craft and technician trainees being released to attend technical institutes for one day a week. Again, it is recommended, that more such centres be established in other industries.

A credit-unit system at technician level was introduced into the technical institutes with effect from September 1977. At first, consideration was given to a locally-validated system but later it was decided to seek TEC validation for the technician courses. This credit-unit system has proved to be more flexible and responsive to change. In turn, validation by TEC gives international recognition which provides known standards and greater credibility, even though the programmes are geared specifically to suit local needs. TEC recognition of programmes has proved popular and about 90.5 per cent of the eligible institute students pay the TEC fee in order to be able to obtain a TEC certificate in addition to a Hong Kong Education Department Certificate.

Finally, no serious attempt was made to enrol handicapped students into institutes until September 1979, and then only on a modest scale. With greater attention being paid to the disadvantaged in many parts of the world such a move in Hong Kong was timely. The number of handicapped students attending technical institutes will undoubtedly grow and they will require more resource teachers and special equipment. In addition, the four institutes, excluding the Lee Wai Lee, will have to be modified structurally.

---

1. Williams, Paper 1, Manpower Forecasting as a Basis for Educational Planning in Hong Kong, op. cit. para. 21(1) and (2).

Chapter 4

COURSES RUN IN TECHNICAL INSTITUTES

Introduction

The Morrison Hill Technical Institute originally planned to run both technician and craft courses, although S.Z. Sung, the Principal of the Technical College, and Ian Grant, the International Labour Organisation adviser, felt that all technician education should remain at the Technical College and the technical institutes should only run craft courses.[1] A limited number of technician courses was mounted when the first institute opened, in 1969, and although a policy was introduced for a short time in 1977 to restrict the number to a 20 per cent technician, 80 per cent craft ratio based on student numbers, the number of technician courses in technical institutes has increased ever since.

As a consequence, a wide variety of full-time, part-time day and evening only courses is run, at both levels, together with some short courses.[2] Craft courses are taught mainly in Chinese (spoken dialect Cantonese) and technician courses largely in English. The major proportion of the courses is designed for the manufacturing sectors but others are run in commerce and for some service industries. While some consideration has been given to the running of non-vocational and recreational courses, up to 1980 all courses run in institutes were of a vocational nature although general education "bridging" courses, with some technical bias, have always been provided to enable underqualified students later to join either craft or technician courses.

As previously mentioned, emphasis has always been on part-time day release courses and, in some cases, when there

---

1. The Morrison Hill Technical Institute, a draft for discussion (June 1968); and Minutes 112, 20th Heads of Departments' Meeting, Technical College (21 March 1968); and The Morrison Hill Technical Institute (17 July 1968), para. 8.
2. Categorisation of Courses in the Technical Institutes and the Technical Teachers College, (146)ED(TE)110/1 (26 August 1980).

has been a shortage of teachers, full-time classes have been cancelled in order that more part-time day classes could be mounted. It appears that a number of firms, which are compelled by law to send their apprentices in designated trades to attend technical institute day-release courses, would not do so if the scheme was on a voluntary basis.[1] While some success has been achieved with the introduction of block-release and integrated courses, in the late 1970s, no sandwich courses had been run although it was intended to mount these when industry was ready to accept them.

Ratio of craft to technician courses

We have already seen, in Chapter 2, that when the courses were transferred from the Technical College to the first technical institute in 1969, the Principal of the Technical College advocated that the institute should only run craft courses and that all technician courses should remain at the Technical College.[2] His recommendation was supported by a representative of the International Labour Organisation who, at the time, was based in Hong Kong attached to the Government Labour Department, where he was an adviser on apprenticeships.[3] This representative felt, like the Principal of the Technical College, that as craft education was so important, the institute should concentrate exclusively on this work. Indeed, one advantage would have been that there would be a clear dividing line between the craft courses undertaken by the institute and the technician courses run by the College, with no direct competition between the two institutions. Various other visiting advisers, who came to Hong Kong, were satisfied, however, that the Morrison Hill Technical Institute should run technician courses.[4]

---

1. Report of the Third Survey of Part-time Day Release Courses By the Committee on Technical Training in Institutions of the Hong Kong Training Council (August - September 1980), p.13, para. 4.3.
2. See page 35 , footnote 3.
3. Ian Grant, Morrison Hill Technical Institute (report) (17 July 1968), para. 8.
4. H.E. Hammond (Ministry of Overseas Development Adviser), Morrison Hill Technical Institute, (report) (August 1968), passim; and Houghton et. al. op. cit. passim.

It was argued that if the institutes mounted these courses, then more staff with degrees or degree-equivalent qualifications could be recruited and more funds would be allocated to purchase equipment which would improve the quality of teaching on craft courses.[1] It was also pointed out, in 1969, that if the original proposal to run technician courses were altered, then some of the equipment already on order would have to be cancelled and some changes would be necessary to the building which was already under construction. The Director of Education finally decided that Morrison Hill Technical Institute would run technician courses, as originally planned.[2] Later, in 1971, a representative from TETOC recommended that more technician courses should be transferred from the Technical College to the Morrison Hill Technical Institute.[3]

Since then, no formal recommendations have been made that the technical institutes should run only craft courses but concern has been expressed that they could run too many technician courses and neglect the important craft area of study.[4] For example an 80/20 ratio, which was discussed briefly in Chapter 1, in which approximately 80 per cent of the students in technical institutes, by head-count, should be at craft level and 20 per cent at technician level, was imposed in 1977.[5] This ratio was not popular with principals of technical institutes and resulted, temporarily, in a scaling down of technician courses with some of these being transferred to the Polytechnic, including some at the higher technician level. The principals also felt that by shedding some of the technician courses the institutes would lose some of their status in the eyes of the community. The 80/20

---

1. D.D. Waters, The Morrison Hill Technical Institute, Technician Level Courses (23 June 1969), p.8, para. 11.
2. See page 35, footnote 4.
3. J.W. Gailer, Visit to Hong Kong, 13-16 June 1971 (16 August 1971), p.3, para. 2.3.
4. See page 8, footnotes 2 and 3.
5. See page 9, footnote 2.

ratio, although implemented, was short-lived and the policy was superseded by the 1978 White Paper which, as we have already seen, recommended that a number of technician Diploma and Certificate courses should be transferred from the Polytechnic to the technical institutes.[1]

At the same time it was agreed, however, that all higher technician courses should be run at the Polytechnic, except for areas of study not covered there, such as printing and automobile engineering, and, in such cases, the Higher Diploma or Higher Certificate work would be undertaken in one of the technical institutes.[2] Since then, a "recommended option" has been that the technical institutes should run some Higher Diploma and other higher technician courses but, as at 31 August 1980, no firm decision had been taken on this recommendation.[3] If this recommendation were implemented it would allow the Polytechnic to concentrate more on technologist courses, including some at degree level, for which there is now a greater demand especially following the recent increase in tuition fees in Britain and other countries. Hong Kong students now sometimes find it beyond their means to study overseas. For example, in 1979 the number of student visas, issued by the Hong Kong Immigration Department, to the United Kingdom, totalled 4,648. In 1980 this figure dropped to 2,688.[4]

The developments detailed above have had an effect on the courses run and the numbers of students at craft and technician levels, as can be seen from Table 19.

---

1. The Development of Senior Secondary and Tertiary Education, op. cit. p.16, para. 6.9.
2. Working Party Report ... op. cit. p.60, para. 4.40.
3. Working Group on Higher Education Report: The Development of Higher Education in Hong Kong (8 February 1980), p.18, para. 9.5.
4. Education Department statistics, Reference, ED 3814/54^{II}.

Table 19 : Numbers of Courses in Technical Institutes

Mode of study		1969/70[1]			1970/71[2]			1979/80[3]		
		Technician	Craft	Total	Technician	Craft	Total	Technician	Craft	Total
Full-time		5	11	16	6	16	22	25	17	42
Part-time day	PTDR	1	3	4	1	7	8	19	53	72
	BR	-	-	-	-	-	-	-	4	4
Evenings only		7	16	23	9	25	34	41	35	76
Total		13	30	43	16	48	64	85	109	194

In 1969/70, the first year the Morrison Hill Technical Institute was in operation, the number of courses was small. This was because it was operating in borrowed premises and there were constraints on expansion. Of the total of 43 courses, less than one-third were at technician level. In 1970/71, the first year the institute was situated in its own premises, the total number of courses increased, to 64 , as did the proportion of craft courses to technician courses. In addition, the number of part-time day courses doubled in total. While, in the early 1970s, there was one course described as "block-release" which was called, "Engineering Craft Apprentices", this was really a misnomer as it amounted to a half-year, full-time course.[4] For this reason, it has been grouped with the full-time courses in Table 19.

---

1. Vocational Training in Hong Kong, booklet, Vocational Training Committee, Hong Kong Council of Social Service, (undated) (circa May 1970), p.21.
2. Opening Ceremony, The Morrison Hill Technical Institute (booklet) (12 October 1970), pp.13 to 18.
3. Enrolment Report for the Technical Institutes, 1979/80 (9 January 1980), p.2, paras. 4.2 to 4.4.
4. The Morrison Hill Technical Institute, prospectus (Third Edition), p.50.

By 1979/80 the number of courses had increased considerably. Full-time and evening courses were each about double the 1970/71 figures and part-time day release had grown from 8 to 72, a dramatic increase. In addition, four block-release courses were being run. It can also be seen that there was a big increase in the number of courses being run at technician level which, in the full-time and evening mode of study exceed those at craft level. On the other hand, the number of part-time day craft courses significantly exceeded the number of part-time day technician courses. This is because all designated trades are at craft level.

Having examined the build-up of courses, and the increase in the proportion of full-time and evening technician courses over the period under review, it is now necessary to analyse the increase in student numbers.

Table 20 shows that in 1970/71 the technician to craft ratio at the Morrison Hill Technical Institute, for full-time classes, was 34/66. This altered to 50/50 in the four technical institutes (Haking Wong had just opened) in 1977/78, and in 1979/80 in the five technical institutes it had altered still further to 60 per cent technician students to 40 per cent craft students. For part-time day students, in 1970/71, the ratio was 18 technician students to 82 craft students. With the introduction of the Apprenticeship Ordinance and designated trades, all at craft level, the proportion of craft students increased to 12/88 in 1977/78. However, in 1979/80 the ratio swung back again to 16/84 with a larger number of technician apprentices being supported by employers on a voluntary basis. For evening students in 1970/71, the ratio was 13/87, heavily in favour of craft and craft-equivalent students. By 1977/78 the ratio had changed to 36/64 and, in 1979/80, it changed still further to 43/57. The ratio for all modes of study went from only 15 per cent technician students to 85 craft in 1970/71 to 32/68 in 1977/78 to 36/64 in 1979/80.

The general trend to run more higher level courses and to enrol more technician students occured for a variety of reasons. Firstly, there has been some "rationalisation" of courses between the Polytechnic and the technical institutes

Table 20 : Numbers of Students at Craft and Technician Levels in Technical Institutes in 1970/71, 1977/78 and 1979/80 by Various Modes of Study

Mode of study	1970/71[1]				1977/78[2]				1979/80[3]			
	Technician	Craft	Total	Ratio	Technician	Craft	Total	Ratio	Technician	Craft	Total	Ratio
Full-time	235	465	700	34/66	1,134	1,143	2,277	50/50	1,799	1,179	2,978	60/40
Part-time day	113	530	643	18/82	530	3,998	4,528	12/88	1,274	6,616	7,890	16/84
Evenings only	992	6,623	7,615	13/87	4,607	8,160	12,767	36/64	5,494	7,217	12,711	43/57
Total	1,340	7,618	8,958	15/85	6,271	13,301	19,572	32/68	8,567	15,012	23,579	36/64

1. Education Department, numbers of students on roll.
2. Capacity and Enrolment of Technician Courses/Programmes in Technical Institutes 1977/78; and Capacity and Enrolment of Craft Courses in Technical Institutes 1977/78.
3. Enrolment Report for the Technical Institutes, 1979/80.

and, throughout the 1970s, some technician courses have been transferred to the technical institutes. In addition, some principals and heads of departments have been keen to run higher level courses partly because they were more interested in the higher level work and partly because they felt it would give the institutes enhanced status and enable them to acquire better facilities. As has been mentioned earlier, this tendency was briefly reversed by the introduction of the 20 per cent technician, 80 per cent craft ratio in 1977.[1] At that time, it was intended to alter the technician to craft ratio in institutes to 20/80 by 1981/82.[2]

Table 21 (figures extracted from Table 20) reveals other important developments, namely the growth in the number of full-time students, the rapid growth in the percentage of part-time day student numbers and the corresponding reduction in evening only students.

Table 21 : Numbers and Percentages of Full-time, Part-time Day and Evening Only Students in Technical Institutes in 1970/71, 1977/78 and 1979/80

Mode of study	1970/71	1977/78	1979/80
Full-time	700 (8%)	2,277 (12%)	2,978 (13%)
Part-time day	643 (7%)	4,528 (23%)	7,890 (33%)
Evenings only	7,615 (85%)	12,767 (65%)	12,711 (54%)
Total	8,958 (100%)	19,572 (100%)	23,579 (100%)

The rapid increase in part-time day student numbers has been

1. See page 125, footnote 5.
2. Development Plan of Technical Institutes 1978 - 1983 (June 1978), p.57, Appendix II.

brought about largely because of the introduction of the Apprenticeship Act and the designation of trades. Moreover, the rate of growth of full-time student numbers would have been even greater had more places been available, but often these were withdrawn so that additional part-time day classes could be run instead. Again, there was no shortage of qualified applicants for evening classes, but shortage of funds prevented more from being run.

Disciplines covered and the course structure

As we have already seen, when the Morrison Hill Technical Institute first opened, it consisted of six departments. These were commericial studies, construction, electrical engineering, mechanical engineering, general studies, and technical-teacher training. The last department was transferred to form the new Technical Teachers College in 1974.

Table 22 : Numbers and Percentages of Students in the Main Disciplines in Technical Institutes and the Numbers and Locations of Departments in each Main Discipline in 1979/80 [1]

Department	Total number of students (by headcount)	Percentage of students	Number of Departments and Locations
Clothing	782	3	2 Kwai Chung and Kwun Tong
Commercial Studies	3,785	16	3 Kwai Chung, Lee Wai Lee and Morrison Hill
Construction	3,339	14	2 Haking Wong and Morrison Hill
Design	258	1	1 Lee Wai Lee
Electrical Engineering	4,171	18	4 Haking Wong, Kwai Chung, Kwun Tong and Morrison Hill
General Studies	2,398	10	2 Lee Wai Lee and Morrison Hill
Hotel-keeping and Tourism	431	2	1 Haking Wong
Industrial Technology (footwear, optics, clock and watch repairs)	453	2	1 Lee Wai Lee
Marine and Fabrication	872	4	1 Haking Wong
Mechanical Engineering	5,734	24	5 Haking Wong, Kwai Chung, Kwun Tong, Lee Wai Lee and Morrison Hill
Printing	604	3	1 Kwun Tong
Textiles	787	3	2 Kwai Chung and Kwun Tong
	23,614	100	25

1. Enrolment Report for the Technical Institutes, 1979/80, (9 January, 1980).

If we examine the distribution of students undertaking courses (Table 22) it can be seen that the numbers and percentages in the separate disciplines vary considerably. For example, there were 5,734 students (24 per cent) studying mechanical engineering in 1979/80 and only 258 (1 per cent) studying design. This wide variation is because one technical institute has a design department, this was established in 1979 in Lee Wai Lee, while they all run mechanical engineering courses the first department being set up in 1969 in Morrison Hill. The main criterion, however, for the size of a department is the requirements of industry. The advice of the Hong Kong Training Council is sought when new institutes are planned or when it is proposed that new courses should be run and extensive use is made of the Training Council's manpower surveys. If a Department proves to be too large, because of the changing needs of industry, then consideration is given to stopping courses or even to closing a department if this should prove necessary although the latter has not happened in practice.[1]

Each technical institute provides basic courses to serve its own locality and each provides some specialisms to a more advanced level. For example, while all institutes mount courses in basic mechanical engineering, only Kwun Tong Institute runs courses in printing and only Haking Wong Institute runs courses in hotel-keeping and tourism. The Lee Wai Lee Institute also runs a course in "child-care" for full-time nursery workers. (See Appendix 3).

The basic course structure, in technical institutes, may be seen at Figure 5. The general education requirement for entry to a craft course is completion of Form Three in a secondary school, as explained on page 147, but, as an interim measure, before nine years of free, compulsory and universal education were introduced in 1978 (which took until 1981 to be fully implemented), a lower standard was accepted for some craft courses. The accepted entry standard

---

1. ED(TE)108/3/1 (9 May 1980).

Fig. 5
Basic Course Structure Within Technical Institutes[1]

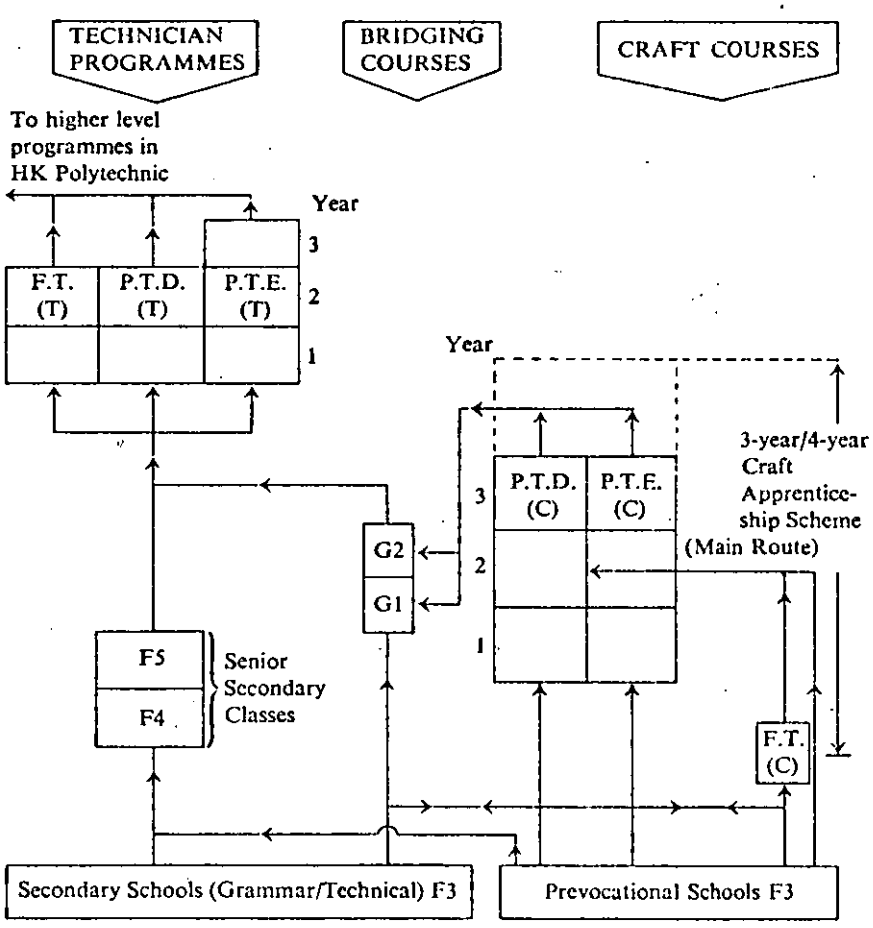

Key: G1 = 1st year of General Course (Evening)
G2 = 2nd year of General Course (Evening)
FT = full-time courses
PTD = part-time day-release, block-release and sandwich courses
PTE = evening courses
(T) = post Form 5 courses (Technician/Technician comparable courses)
(C) = courses with entry requirement generally at Form 3 (craft/craft comparable courses)
F = Form

---

1. Technical Institutes (joint) Prospectus 1979 - 80, p.8.

for technician courses was completion of Form Five with suitable passes in the Hong Kong Certificate of Education Examination or equivalent. Satisfactory completion of the General, part-time (bridging) course was also accepted as an alternative qualification for entry to a part-time technician course. Until 1974, some evening technician courses accepted satisfactory completion of Form Four as satisfying minimum entry requirements.[1]

Full-time courses

A wide variety of broad-based, full-time courses are run in technical institutes and these are designed to fully integrate practice with theory.[2] The standard full-time technician course is of two-years' duration. Such Diploma courses were first introduced at the Technical College in 1963 and, until then, what had been the three-year Diploma course became the Higher Diploma course. In 1969, some of the two-year Diploma courses were transferred to the Morrison Hill Technical Institute and, since then, new Diploma courses have commenced there and in other institutes. As J.R. Devereux points out, "The Technician Diploma Course has been a source of good practical technicians for many years. It is a very successful Hong Kong product ..."[3].

As a result of recommendations made by the Hong Kong Training Council, a pilot scheme of one-year, full-time, technician courses, in both basic electronic engineering and basic mechanical engineering, commenced in September 1978.[4] While there were some reservations in running these courses they were finally started on the understanding that industrialists would do their best to absorb these students into employment, preferably into apprenticeships, and would allow them to continue their studies in subsequent years on a

---

1. The Morrison Hill Technical Institute (prospectus) Third Edition, p.40.
2. Technical Institute (joint) Prospectus 1979 - 80, passim.
3. J.R. Devereux, Future Role of the Technical Institutes (20 October 1976), p.4, para. 3.1.1.
4. Technical Institutes/Technical Teachers College 23rd Policy Committee Meeting (14 February 1978), p.2, minute 330.

part-time day basis. Up to 1980, this pilot scheme appears to have been reasonably successful and students have been absorbed by industry.

The one-year, basic craft course was also first introduced into the Technical College in 1963 and all these courses were transferred to the Morrison Hill Technical Institute, when it was established, in 1969.[1] Since then, a large number of similar courses have been introduced both there and in other institutes.[2]

On a one-year, full-time, basic craft course practical instruction makes up about 50 per cent of a 30 hour week, whereas for a technician course practical work amounts to about one-third. However, actual time will vary from course to course. The remainder of the time is spent on such studies as trade theory and ancillary subjects including mathematics, science and, for some courses, communications. Physical education is included in the curricula of all full-time courses and all students are encouraged to take part in extra-curricular activities, including ball-games, athletics and swimming. All institutes have independent students' unions, run by the students themselves, which assist in the corporate life of the institutes.[3] A number of clubs and societies are affiliated to the students' unions sponsoring such activities as photography, chess, drama, music, bridge, sailing and various ball games. Because they only spend a limited number of hours in an institute each week, part-time students have not generally taken an active part in extra-curricular activities although they have been encouraged to do so.[4]

On completion of a one-year, full-time, basic craft course a student is able to enter the second year of an

---

1. D.D. Waters, The Morrison Hill Technical Institute, The Basic Pattern of Craft Courses (18 April 1969), passim.
2. Technical Institutes (joint) Prospectus 1979 - 80, passim.
3. Technical Institutes (joint) Prospectus 1979 - 80, p.13.
4. 36th Committee Meeting, Technical Training in Institutions, Hong Kong Training Council (22 June 1979), Minute 244.

apprenticeship and the second year of a part-time day course. On completion of a full-time course a student lacks on-the-job experience, even though courses include a large proportion of practical work under simulated industrial conditions. It is, therefore, necessary for him to obtain industrial experience when he takes up employment. Consideration has been given to running two-year, full-time, craft courses but the consensus of opinion has been that a student at craft level is too long isolated from the on-the-job environment and it is better for him to join a one-year full-time course followed by a part-time day course; although two, two-year craft textile courses were run these were discontinued in 1978.[1]

A one-year, full-time, engineering Pretechnical course was introduced by Morrison Hill Technical Institute in September 1977 and a textile/clothing Pretechnical course was started by the Lee Wai Lee Institute in 1979. These courses are bridging courses mainly for high-flying, pre-vocational school leavers, enabling them to enter an institute technician course. The Pretechnical course consists of up to two-thirds of the time on technical and academic theoretical subjects and the remainder devoted to practical work.[2] It is intended to phase out these courses when senior secondary classes have been firmly established in prevocational schools.

Evening only courses

Evening classes formed an important part of the work of the Technical College and student places built up from about 200 in 1947 to 8,000 in 1962, when some 26 courses were offered very much on the lines of a technical college in Britain.[3] Twenty-three evening courses were handed over from the Technical College to the Morrison Hill Technical Institute

---

1. J.R. Devereux, Future Role of Technical Institutes (20 October 1976), p.5, para. 3.1.2; and Guide to Applicants, Technical Institute Courses (1977).
2. H.S. Tsang, Head, General Studies Department, Morrison Hill Technical Institute, Report on the Department of General Studies (1976), p.11; and Technical Institutes (joint) Prospectus 1979 - 80, p.117.
3. Report of Hong Kong Education Commission (1963), Chapter 24, para. 16.

on September 1, 1969 and this resulted in the enrolment of 7,615 evening students for the 1969/70 academic year. As may be seen from Table 21, evening students formed 85 per cent of the total student body in 1970/71. This dropped to 54 per cent in 1979/80 largely because of the rapid increase in the number of day students and also because, although there was no shortage of evening course applicants, insufficient funds were allocated for more rapid growth. However, the number of evening only students grew from 7,615 in 1969/70 to 12,711 in 1979/80 giving an average annual growth of 7.4 per cent.[1]

Technical institute evening classes usually meet, from 7.00 pm to 9.00 pm, on two, three or four evenings a week, for thirty weeks in the year. A number of short courses are also run.[2] Some evening (twilight) classes are held between 4.45 pm and 6.45 pm. Because there is insufficient accommodation in the technical institutes themselves a number of external centres are employed. These are usually schools. During 1979/80, nine such centres were situated on Hong Kong Island, 11 in Kowloon and three in the New Territories. These, however, lacked practical facilities and workshop classes had to be held in the institutes themselves.

Similar courses were run on a full-time, part-time day and evening only basis (see Table 22 and Appendix 3). Because a full-time student studies for about 30 hours a week and a part-time day student and an evening only student study for about 10 and 6 hours a week respectively, a day student can study more subjects. Nevertheless, it is usually reckoned that a full-time technician diploma is approximately equal to a part-time day or a part-time evening certificate on a "subject for subject" basis. One thing in favour of the part-time student is that he is usually in related employment

---

1. ED(TE)114/1 (May 1980).
2. Short courses 1970 - 71, The Morrison Hill Technical Institute (booklet), passim.

and is learning on-the-job at the same time. With the present credit-unit system it is possible for a student to obtain a diploma by full-time study and then to add units by means of part-time classes.

In addition to a wide variety of craft and technician courses being run on an evening only basis, in similar subjects to the courses run during the day, Preliminary (Pre-General) and General courses are also run.[1] These bridging courses allow students, who have been unable to finish their secondary education on a full-time basis, to continue their studies in the evenings, thus providing a "second chance". Such students study a limited range of subjects, with some technical bias, comprising English, mathematics, science and technical drawing. On completion of Pre-General Year Two a student may enter a craft course and, on the satisfactory completion of General Year Two, may join a technician course. The standard of Pre-General Years One (P1) and Two (P2) equate approximately to Forms Two and Three, and the standards of General Years One (G1) and Two (G2) to Forms Four and Five in secondary school, but in a limited range of subjects.[2]

In 1971/72 there were 783, P1 students and 1,986, P2 students. The corresponding figures dropped to 44 and 284 respectively in 1979/80.[3] This was partly because of a shortage of funds but also because of the introduction of three years of full-time, lower-secondary education for all students in the 12 to 15 age group. There may, however, be a need for a small number of P1 and P2 classes in the future for over-age students. The numbers of G1 and G2 students in 1979/80 amounted to 772 and 1,049 respectively giving a total of 2,149 students in the Pre-General and General courses. The number of qualified applicants amounted to 8,007 which shows that many had to be turned away because of a shortage of funds or because it was not possible to engage additional part-time lecturers.[4] Because of the introduction of nine years of

---

1. Waters, A Series of Papers ... Paper One - General, op. cit. pp.19 and 20.
2. Ibid.
3. (18)ED(TE)7/163/77 (1 April 1980).
4. Ibid.

full-time education for all, the number of applicants for G1 and G2 classes in technical institutes will probably increase in the future. For this reason, it is important that sufficient funds are provided by the Government.

Within the Education Department, vocational type evening courses have been provided by the technical institutes and non-vocational evening courses by the Adult Education Section. The latter consists of the Evening School of Higher Chinese Studies, the Evening Institute, and the Adult Education and Recreation Centres.[1] The Adult Education Section comes under the Assistant Director of Education (Further Education). The Further Education Division and the Technical Education Division are two separate divisions in the Education Department.

It was suggested, in 1971, that some courses run by the Education Department's Adult Education Section should be transferred to the technical institutes.[2] It was pointed out that this would have a liberalising effect on the latter, which, coupled with its external centres previously mentioned, would become centres for their districts providing general, cultural and recreational courses in addition to those of a technical and vocational nature. However, the Director of Education did not agree to the proposal. The matter was raised, by the Assistant Director of Education (Technical), in 1977, but the Working Party on Senior Secondary and Tertiary Education was of the opinion that this suggestion should not be pursued at that time as all resources available, for the development of the technical institutes, were required for vocational type courses.[3] The same view was taken by the Director of the Hong Kong Polytechnic and his staff who, when commenting on a paper, "The Future Role of Technical Institutes"[4], said, "there is general agreement that

---

1. Director of Education, 1977/78 Annual Summary, pp.10 and 11.
2. Houghton et. al. op. cit. p.54, para. 2.45.
3. Working Party Report ... op. cit. p.55, para. 4.27.
4. D.D. Waters, The Future Role of Technical Institutes (2 September 1976), p.7, para. 9.

the time is not ripe for the technical institutes to run non-vocational courses".[1]

Similarly, the Hong Kong Training Council has generally not been in favour of technical institutes offering liberal or general education type courses because it felt that there were insufficient resources to provide vocational education to satisfy the needs of industry.[2] This decision was correct. While the running of Hong Kong Certificate of Education Examination or "O" or "A" level subjects, in the technical institutes, would be popular with secondary school leavers, and institutes could be filled to overflowing, resources are insufficient and, what are available, should be used for running vocational courses for industry.[3]

Short courses

A large number of short courses were run by the technical institutes throughout the 1970s.[4] While most of these were evening only courses, some were offered between 4.45 and 6.45 pm. and a few were run during the day, including on Saturday mornings. The duration of these courses varied from two or three lectures to 20 or more weeks of instruction on two evenings a week. Typical subjects covered included elements of commerce (30 hours), housing caretakers (48 hours) (One of the few courses that has been run at operative level to meet a special need), concrete practice (16 hours), bamboo scaffolding (48 hours) and quality assurance and component testing for transistor radios (12 hours). During the 1971/72 academic year, 194 students attended short courses in the Morrison Hill Technical Institute and during 1978/79 this figure rose, in all institutes, to 3,527.[5] These two figures represent the minimum and maximum annual numbers of students who attended short courses during the 1970s. The intention

---

1. Comments by Director of Polytechnic and his senior staff (5 January 1977).
2. (53)1 ED(TE)18/106/74 III (1 May 1978), p.3, para. 200.3.
3. J.R. Devereux, Future Role of the Technical Institutes (20 October 1976), p.8, para. 8.
4. Short Courses 1970/71, The Morrison Hill Technical Institute (booklet), passim.
5. (116)ED(TE)110/1 (9 June 1980).

has always been that more short courses should be run especially in the areas of updating and retraining. However the practice, every year, has been to earmark money that was required to run normal evening courses first and then, any money that was left over was used for the running of short courses. It was largely for this reason that the numbers of short courses, from year to year, have varied so considerably as, in some years, funds were limited.

From the heavy and varied programme of day, "twilight" and evening courses it can be seen that the technical institutes were in almost continuous operation from before 9 o'clock in the morning to 9 o'clock at night.

Part-time day courses

Throughout the history of the Technical College, limited progress was made in the running of part-time day courses. For example, in the Autumn of 1957, when the College moved from Wood Road, on Hong Kong Island, to its new building in Hung Hom, Kowloon, it had 311 full-time, 3,432 evening only students and only 68 part-time day release students on roll.[1]

In its 1953 report, the Technical Education Investigating Committee recommended that engineering departments of Government and interested firms should be invited to participate in a scheme of day-release classes for their apprentices as soon as staff and accommodation were available.[2] Part-time day release started at the Technical College in 1955 when classes commenced for Government Waterworks and Electrical and Mechanical craft apprentices of the Public Works Department and craft apprentices of the Government Kowloon and Canton Railway.[3] Later, apprentices from a number of firms in the private sector joined the scheme. By 1966 there were 18 part-time day release classes consisting of 312 students, including 86 students from the three Government workshops mentioned above.

---

1. Opening Ceremony of the New Technical College (booklet) (2 December 1957), p.14.
2. A Report on Technical Education and Vocational Training in Hong Kong, the Technical Education Investigating Committee (1953), para. 2.58.
3. (45)TC/G/1/152A (27 January 1966).

The 1963 Hong Kong Education Commission Report recorded that apart from the Government and a few western style firms, little interest had been shown by local employers in the advantages of part-time day release education and that there was little indication of any increase in the future.[1] The report went on to say that most employers had little interest in technical education for their employees unless there was clear and immediate benefit and that there was resistance to courses which took employees away from their jobs during working hours. It did however state that part-time day courses for electrical engineering and for laboratory technicians were well supported and showed signs of further growth. In its last academic year, in 1971/72, before it became the Polytechnic, the Technical College had on roll 1,700 full-time, 740 part-time day release and 9,304 evening students showing that its major growth areas were full-time and evening only classes.[2]

When the first technical institute was planned, in the mid 1960s, some emphasis was placed on part-time day release; however, bearing in mind the limited progress that had been made at the Technical College with the development of such classes, many College staff felt that the planners were being too optimistic.[3] However, the position changed in 1970, with the introduction of the registered apprenticeship scheme (see Chapter 3) and, since then, first priority has always been given to these classes.[4] When a "Summary of Broad Objectives 1970 - 1980" (for technical institutes) was drawn up, by the Education Department in 1972, almost all day classes were planned to be on a part-time day release basis.[5] This five page document listed the steps to be taken and the objectives for establishing new technical institutes. It covered such topics as quantity, quality, cost-effectiveness

---

1. Report, Hong Kong Education Commission (1963), Chapter 24, paras. 14 and 15.
2. Hong Kong Polytechnic Prospectus 1976/77, p.33.
3. Proposal of a Technical Institute, Revised (September 1964), passim; and recollections of past Technical College staff.
4. Part-time day release courses, TI7/76 (13 December 1976), ED(TD)5/6704/72.
5. (68) ED(GR)2/6704/67 (21 July 1972).

and community reaction. It was intended that each institute should accommodate about 6,500 part-time day release students and discontinue one-year full-time courses, as prevocational school output became effective, thus increasing technical institute capacity. This proposal was later changed as it was realised that it was desirable to have some full-time students in technical institutes, otherwise there would be a lack of corporate spirit and few extra-curricular activities would take place. Also, the proposals for the rapid development of prevocational schools were, in 1974, curtailed.[1] However, the 1978 White Paper on the Development of Senior Secondary and Tertiary Education stated that technical institutes should give priority to part-time courses which were integrated with employment, and this has always been done.[2]

Part-time day release courses in technical institutes normally consist of one day (about six hours) and two evenings a week, making a total of ten hours.[3] Most of the technician apprentice courses are for four years and the craft apprentice courses for three years.

There is a great deal to be said for full-time study when a course is largely of a theoretical nature. A student is then able to spend approximately 30 hours a week in an educational institution and he is able to concentrate on his studies without having to think about a job. By comparison, a student on a part-time day release course will usually only spend ten hours a week in an institute;[4] but the advantage with these courses, especially when they are of a practical nature such as craft and lower-technician courses, is that

---

1. Cf. Report of the Board of Education on the Proposed Expansion of Secondary School Education in Hong Kong Over the Next Decade (August 1973), p.11, recommendation 4; and Secondary Education in Hong Kong Over the Next Decade (16 October 1974), pp.5 and 6.
2. The Development of Senior Secondary and Tertiary Education, op. cit. p.16, para. 6.12.
3. (146)ED(TE)110/1 (26 August 1980).
4. There is still room for improvement in the Industrial Apprentice Training Scheme, a mechanic apprentice puts forth his opinions (translation), Express Daily (3 November 1977).

a student is better able to relate the theory that he is learning in an institute with his job in industry.[1] And while attempts are sometimes made, it is usually difficult to simulate an on-the-job situation in an educational institution. When questioned on this subject, 78 per cent of employers thought that craft and technician education was usually most successful when conducted on a part-time basis in conjuction with employment providing practical training on-the-job: 14.9 per cent disagreed with this view.[2]

In turn, part-time day studies are considered superior to evening only studies, and the failure and drop-out rates are less, as a student does not have to study solely in the evenings after a hard day's work.[3] There is also a greater degree of uniformity of instruction from class to class because full-time teachers are employed, and a student has a greater sense of belonging to an academic institution. From experience, Hong Kong has found that the part-time day release system has generally worked well and, while a block-release or a sandwich system would have been an alternative, it is felt that they would not have been so successful, especially at craft level.[4]

The increase in the number of part-time day students may be seen at Table 3. Four part-time day release courses were handed over from the Technical College to the Morrison Hill Technical Institute on September 1, 1969 and a total of 41 students were on roll in the first academic year. With the setting up of a registered apprentice scheme, in 1970, this meant that, for the first year the Institute was established in its new building in 1970/71, it had 601 part-time day release students on roll. As we have already seen, until the summer of 1976, all apprentices attended technical

---

1. Working Party Report ... op. cit. p.51, para. 4.17.
2. Report of Opinion Survey on Green Paper on Senior Secondary and Tertiary Education (10 March 1978), p.23; and Working Party Report ... loc. cit.
3. Comments of Apprentices on Craft and Pre-craft Courses in Technical Institutes (14 July 1978), AD/KCTI/GEN.
4. (40) ED(TE) 114/6 (7 December 1978); and (24) ED(RB)692/78 pt3 (20 June 1980).

institutes on a voluntary basis. During this period there was a steady increase in the number of part-time day release students to 1,812 in 1975/76.

The Apprenticeship Ordinance was passed in July 1976 and 23 trades, all at craft level, were designated in September of the same year; however, this was too late to bring its full effects to bear on enrolments in the three technical institutes at the start of the new academic year. As a result, the number of part-time day students increased in the following year (1977/78) by 80 per cent. As we have seen, more trades have since been designated and this has meant a further increase in the number of part-time day release students. As at August 31, 1980, there were 37 designated trades, all at craft level, and all apprentices in these trades, under the age of 19 years, had to attend part-time day courses and their employers were compelled to release them for one day a week, on full pay. The apprentices also attended classes on two evenings a week in their own time.

From Table 3, it can be seen that the biggest proportional annual increase in the number of part-time day students was in 1970/71. This was 1,400 per cent over the previous year largely because the registered apprenticeship scheme was introduced at that time by the Government and also because, in the previous year, there were only 41 part-time day release students on roll. With this exception, the biggest increases in part-time day release student numbers took place after the introduction of compulsion, with the enactment of the Apprenticeship Ordinance in 1976. The total overall increase from 41 students in 1969/70 to 7,920 in 1979/80 was 19,217 per cent.

After the introduction of the Apprenticeship Act and the designation of 23 trades, in 1976, some firms reportedly evaded the Act by recruiting "apprentices" in designated trades who were 19 years of age or over.[1] In this way,

---

1. (5) KT/132/13 (20 October 1976), para. 2.3.1 (a).

the firms were not compelled to send them on part-time day release classes. While the Commissioner for Labour had the power to raise the age limit from 19 to 21, there was never any serious suggestion that this should be done.

The normal minimum entry standard, for part-time day release craft courses, was satisfactory completion of Form Three.[1] One difficulty, however, that was experienced by the technical institutes was the low standard of general education of many of the apprentices. At first, attempts were made to admit registered apprentices to classes irrespective of their educational qualifications. This meant, in some cases, that students who had only completed Form One (or even in some case Primary Six) were placed in the same class as students who had completed Form Three. While there was no major difficulty for workshop classes and, to a lesser extent, for craft theory the real difficulties were met in the teaching of ancillary subjects such as mathematics, trade science and, for some disciplines, English. It was eventually decided that students with a general education level of Form Two could be admitted, direct, to a craft, part-time day course but that any student with a lower educational level would have to attend a craft (preliminary) course (pre-craft course) first.[2] Such courses have since been run on both a part-time day release and on an evening only basis. These courses are for a maximum period of two years and, if numbers are sufficient, students in the same trade are grouped together. The main purpose of these classes is to raise the general educational standard of an apprentice, especially in such subjects as science and mathematics (and for some trades, eg. motor mechanic, and English), so that he may later join a craft course proper. In 1977/78, 12 pre-craft classes were run.[3] In November 1979/80 there were 1,149 under-qualified apprentices.[4]

---

1. TI/11/1 (13 April 1970).
2. Minutes of meeting between Technical Institute/Technical Education Division/Labour Department staffs (29 April 1977).
3. (47)ED(TE)1/1/107/77 (5 June 1978).
4. (202)ED(TE)120/2 (30 November 1979).

These courses should not be necessary when the effects of the introduction of nine years of compulsory, general education have been felt in the first half of the 1980s.

Even though the Education Department has been advised on the fixing of educational standards for craft courses (completion of Form Three) and technician courses (completion of Form Five) by the Hong Kong Training Council, which has strong industrial representation, some industrialists feel that entry standards should be lowered.[1] Indeed, with the admission of Form Two students (and even lower before 1977) to craft courses the technical institutes have tried hard to cooperate but obviously with limited success.

Conversely, during the 1977/78 academic year, of the 3,481 part-time day release students on roll, 12.2 per cent were "overqualified" meaning that they had completed either Form Four or Form Five in secondary school.[2] This made the "mixed ability" range of the apprentices in part-time day release classes even greater. It is also interesting to see from Table 23, that of the 1,143 full-time students on roll in 1977/78, 23.7 per cent had completed a higher form than the stipulated Form Three while for evening classes the corresponding figure was 20.5 per cent. This meant that with a total enrolment of 12,949 craft students, by all modes of study, 2,400 or 18.5 per cent had had a higher general education than the minimum stipulated. With the introduction of nine years of general education for all, and more students going on to Forms Four and Five in secondary school, it is to be expected that the educational standard of applicants for craft courses will continue to rise in the future and a number of Form Five leavers who are unable to join a technician course, because of keen competition,

---

1. Report of the Third Survey of Part-time Day Release Courses By the Committee on Technical Training in Institutions of the Hong Kong Training Council (August - September 1980), p.16, para. 4.14 (ii); and (46)ED(TE)1/1/107/77 (24 May 1978).
2. (32)ED(TE)4/140/77 (20 April 1978).

Table 23 : Analysis of Numbers of Form Four and Form Five Students Undertaking Craft Level Courses in the Technical Institutes in 1977/78

Department	F.T.			P.T.D.R.			P.T.E.			Total		
	No. of Students above Form 3	No. on Roll	%	No. of Students above Form 3	No. on Roll	%	No. of Students above Form 3	No. on Roll	%	No. of Students above Form 3	No. on Roll	%
Commercial Studies	27	80	33.8	18	27	66.7	565	793	71.2	610	900	67.8
Construction	4	125	3.2	82	625	13.1	98	604	16.2	184	1354	13.6
Electrical Engineering	137	372	36.8	79	627	12.6	361	893	40.4	577	1892	30.5
Mechanical Engineering	36	301	12.0	178	1519	11.7	354	1039	34.1	568	2859	19.9
Marine and Fabrication	10	37	27.0	1	230	0.4	44	133	33.1	55	400	13.8
General Studies	0	78	0	0	0	0	0	4211	0	0	4289	0
Printing	17	36	47.2	50	227	22.0	31	83	37.3	98	346	28.3
Textile Industries	21	57	36.8	14	189	7.4	57	147	38.8	92	393	23.4
Clothing Industries	19	57	33.3	2	37	5.4	195	422	46.2	216	516	41.9
Total	271	1143	23.7%	424	3481	12.2%	1705	8325	20.5%	2400	12949	18.5%

Key : F.T. = Full-time

P.T.D.R. = Part-Time-Day-Release

P.T.E. = Part-Time-Evening

Ref. (32) ED(TE)4/140/77
dated 20.4.78

will apply to join a craft course.

While a number of enlightened and far-sighted employers were able to see the benefits of part-time day courses and, as a result, sponsored students to attend technical institutes, a large number were not in favour. For example, in a Hong Kong Training Council survey conducted in the summer of 1980, only 49 per cent of the respondents expressed interest in sponsoring their employees on part-time day courses.[1] This survey sample covered 2,309 establishments in 11 major industries including automobile repairs and servicing, building and civil engineering, clothing, electrical, electronics, machine-shop and metal-working, plastics, printing, ship-building and ship-repairs, textiles and hotels. Of the 2,309 establishments covered, 2,016 provided the information requested giving a response rate of 87.3 per cent. The survey represented 33.5 per cent of the total work-force in the manufacturing industries.

The survey revealed that, generally, less interest was shown in sponsoring employees on part-time day courses by small firms. For example, only 43 per cent of the establishments which employed from one to nine persons were interested. Conversely, the greatest interest was shown by the largest organisations with 2,000 employees and over. Of these, 87.5 per cent showed interest. The reasons are largely that small firms are unlikely to have any firm training policy, they are often short of capital and releasing workers can cause inconvenience to production.

Of the 51 per cent of the respondents in the survey who expressed little or no interest in sponsoring employees on part-time day courses in technical institutions, which included the technical institutes and the Polytechnic, the following were some of the main reasons given.

---

1. Report of the Third Survey of Part-time Day Release Courses by the Committee on Technical Training in Institutions of the Hong Kong Training Council, (August to September 1980), passim.

Table 24 : Reasons Given by Respondents for being "Unwilling" to Sponsor Employees on Part-time Day Courses.[1]

Reasons	Numbers of "not interested" respondents.
No suitable employees (to send on courses)	470
Apparent loss of production time	332
Employees not interested in part-time day courses	258
Too few employees (to be able to release any)	235
Only employ skilled workers	204

Of the total of 1,021 firms who were "not interested", 479 were employing from one to nine employees. The Committee on Technical Training in Institutions of the Hong Kong Training Council expressed the view, in the report, that the "unwilling" establishments would hopefully see the benefits and the improved performance of their personnel, because of their attending such courses, and would later change their views.

A similar survey was carried out by the Hong Kong Training Council in the summer of 1976, just after the Apprenticeship Act had been passed but before any trades had been designated. This survey was originally intended to cover 840 establishments but because of "closure, removal and merger" the actual sample was 743. Of these, 57 did not respond to the survey (Response rate 92 per cent). Firms with fewer than 50 employees were excluded.[2] Out of the total of 686 respondents, 212, or about 31 per cent, expressed "willingness" to sponsor their employees on part-time day release courses. In addition to this survey covering fewer

1. Ibid. p.11.
2. Report on Survey of Part-time Day Release Courses, Hong Kong Training Council (Conducted in August 1976), passim.

establishments than the 1980 survey, it also covered only six industries. These were electrical, electronics, machine-shop and metal-working, plastics, printing and textiles.

By the time the next survey was carried out, in the summer of 1978, 23 trades had been designated for almost two years.[1] In this survey, 980 establishments were covered of which 856 supplied information (response rate 87.3 per cent). Out of these 856 firms, 462 or about 54 per cent expressed interest in sending employees on part-time day courses. This survey covered the same 11 industries as the 1980 survey and, in the same way, included a large number of small firms.

In summation, these three surveys revealed the following. In 1976, only about 31 per cent of a relatively small survey, covering 686 firms, expressed interest in sending employees on part-time day courses. This figure increased to 54 per cent in the 1978 survey which was slightly larger, covering 856 respondents. It also included some small firms, unlike the 1976 survey. This increase in the number of "interested" establishments was a decided improvement. However, in the 1980 survey, the figure dropped to 49 per cent of the firms expressing interest in sending employees on part-time day release courses. As in 1978, the 1980 survey included small firms employing as few as from one to nine people. It must be remembered, however, that the 1980 survey, covering 2,016 respondents, was much larger than the 1978 survey which covered only 856 respondents. It also covered a larger number of smaller establishments as well as employers who had not run any apprenticeship schemes.

The results of these surveys show that, apparently, a large number of employers are sending their employees on part-time day courses because a trade is designated and because they are compelled to do so. If the present system were changed and it was put on a voluntary basis, it appears the number of part-time day students would drop. Nevertheless,

---

1. Report on Survey of Part-time Day Release Courses, Hong Kong Training Council (Conducted in August 1978), passim.

in spite of the system not always being popular, it has been accepted and there is no doubt that the introduction of compulsion has produced a more highly skilled workforce in a shorter time than would have been produced by voluntary means. It is also the case that, although the system would probably not be accepted in most western countries, it appears to have been effective in the case of Hong Kong.

However, some industrialists have spoken against part-time day release courses. For example, in 1978, James M.H. Wu, a Legislative Councillor and an industrialists, maintained that,

> ... places in the part-time day release courses ... were very much underutilised ...[1]

He went on to say that the blame should not be put entirely on employers and that he did not believe any compulsory action by the Government would be of any use. He continued that he understood in the case of evening classes the reverse was the case and these were heavily oversubscribed and more places were needed. He suggested the position be reviewed.

At the same debate Q.W. Lee, a banker, speaking on behalf of the ad hoc group of councillors set up to study the 1977 Green Paper, argued that,

> ... day-release had not proved viable and Government should place more emphasis on expanding full-time and part-time evening courses.[2]

In his reply, the Director of Education said that putting emphasis on part-time day courses was endorsed by the Hong Kong Training Council and that such classes only made up about 30 per cent of the total number of students in technical institutes.[3] (The remaining places were taken up by full-time and evening students). He also said that the Green

---

1. James M.H. Wu, Legislative Council Meeting, debate on Green Paper on Senior Secondary and Tertiary Education (5 July 1978), p.5.
2. Q.W. Lee, ditto, p.6.
3. K.W.J. Topley, Legislative Council meeting (2 August 1978).

Paper had proposed a considerable increase in the number of evening students (see Table 7).

The criticism levelled by Lee and Wu was made in mid 1978, less than two years after the designation of 23 trades and before the Apprenticeship Ordinance had really started to take full effect. However, in certain areas of part-time day studies, there has been some difficulty in filling classes. For example, for the 1979/80 institute year 10,320 part-time day places were provided consisting of 249 part-time day release and 18 block-release classes.[1] In October 1979, however, only about 7,920, or 76.7 per cent of the places available had been taken up. There is no doubt that while the build-up of part-time day classes in the 1970s was impressive, nevertheless, there were certain subject areas where difficulties were experienced in enrolling sufficient students to form a viable class.[2] Typical examples of numbers of students, during the 1979/80 year, were masonry 9, office practice 10, metal-finishing 8, footwear 13, sewing-machine instructors 13, pattern-making (clothing) 13. Also, on various occasions, both for printing and textile technicians, the numbers of applicants were too small to form classes.

The reason for the low recruitment is that the examples given are not designated trades and there is no compulsion for employers to sponsor their employees on these courses. The Hong Kong Training Council has, on various occasions, stressed the importance of sometimes running part-time day courses, to meet industrial demand, even if the number of applicants was on the low side. Such a practice is important in order to encourage industry and to get a course started in a certain subject area.[3]

Again, when commenting on the efficiency of part-time

---

1. Enrolment Report for the Technical Institutes, 1979/80, p.2.
2. Education Department records, numbers of students on roll; and (47) ED(TE)5/6704/72 (8 August 1978).
3. Report on Survey of Part-time Day Release Courses, Hong Kong Training Council, op. cit. (1976), p.13, para. 29; and Views of Industry Training Boards on Technical Institute Courses (20 December 1978), para. 3(f).

day courses, Wu said,

> Students too find that this once a week interrupted manner of attendance difficult to follow, and soon lose interest.[1]

It is true that there are a few apprentices who are not keen on attending a technical institute and the 1980 Hong Kong Training Council survey recorded that 258 establishments, out of the 2,016 covered in the survey, said that their employees were not interested.[2] During the period from September 1976 (when trades were first designated) to 31 December 1980 the Commissioner for Labour issued 4,227 attendance orders to compel apprentices in designated trades to attend a technical institute.[3] However, the experience of the Education Department is that students prefer to study on a part-time day course rather than in the evenings when they are tired after a hard day's work.[4] Also, a part-time day release course is more comprehensive consisting of about 380 hours a year compared to 180 hours a year for an equivalent evening only course.

Numbers of students completing courses

In the first two months of 1971/72 at the Morrison Hill Technical Institute, the drop-out rates for full-time courses were high. This was mainly because some students were offered places in other educational institutions, such as the Technical College or in Form Six in a secondary school. In September and October 1971, in the Business Studies Department, the loss amounted to as much as 17 per cent of all full-time students. However, new applicants were invited to fill the vacant places and once classes were up to maximum capacity again, at the beginning of November, the drop-out rate was

---

1. James M.H. Wu, Debate on Green Paper on Senior Secondary and Tertiary Education in Legislative Council (5 July 1978), p.5.
2. Report on Survey of Part-time Day Release Courses, Hong Kong Training Council, op. cit. (1980), p.16.
3. Labour Department records.
4. (47)ED(TE)1/1/107/77 (5 June 1978), p.2, para. 6; and (38)AD/KCTI/GEN (14 July 1978).

small.[1] The Business Studies Department again recorded the biggest loss, of about 2.5 per cent of the students at the end of the year.

During the last few weeks of the 1971/72 academic year, the drop-out rate on part-time day release classes, for the full year, varied from department to department, from a maximum of about 24 per cent (mechanical engineering) to a minimum of 12 per cent (technical-teacher training). For evening only classes, as is customary in other countries, the drop-out rate was greater. This varied from about 52 per cent drop-out over the year for mechanical engineering and construction classes to about 32 per cent drop-out for teacher training with the other departments coming somewhere between.

The throughput rate of students is based on the number who successfully complete their courses and obtain a certificate or diploma, compared to the initial enrolment. Examples, based on the numbers of graduates in two successive years, after the Haking Wong Technical Institute had come into operation, are as follows.

---

1. Morrison Hill Technical Institute attendance records.

Table 25 : Throughput Rates of Students in Technical Institutes

Mode of study/level	July 1978[1]	July 1979[2]	Average
	(%age)	(%age)	(%age)
Full-time technician	77	69	73
Full-time craft	71	67	69
Part-time day technician	74	65	70
Part-time day craft	76	68	72
Evenings only technician	31	27	29
Evenings only craft	35	37	36
Full-time	73	68	71
Part-time day	76	67	72
Evenings only	33	34	34
Technician courses	40	43	42
Craft courses	50	50	50

It must be remembered that full-time courses are generally of one or two years' duration while part-time day or evening only courses vary from one to four years. The percentages given, in Table 25, are for the full duration of all courses and not for one academic year. From Table 25 it can be seen that, as would be expected, on average the student wastage rate was highest for evening only classes with 66 per cent; part-time day stood at 28 per cent and for full-time classes the wastage rate was 29 per cent. However for full-time classes, while the technician wastage rate (27%) is less than for full-time craft classes (31%), for part-time day there is a bigger wastage rate for technicians (30%) compared to craft

1. Technical Institute Comparison Study for the Academic Year 1977/78 (April 1979), p.26, Appendix IX.
2. Technical Institute Comparison Study for the Academic Year 1978/79 (April 1980), p.23, Appendix IX.

classes (28%) and the same applies to evening only classes with 71 per cent for technicians and 64 per cent for craft. For part-time day classes, craft apprentices in designated trades are compelled to attend classes by law so this will obviously have an effect in curbing the drop-out rate. For evening courses, after students have paid their institute fees and their names have been entered on roll, they are sometimes offered places on Polytechnic courses thus increasing the student wastage rate.

No corresponding figures are available for England and Wales, however, the following show that their student wastage rates are also high.[1] In the Ordinary National Diploma, of the 12,073 students who entered, only 9,687 (80 per cent) passed the final examinations. In the Ordinary National Certificate, 28,268 entered and 19,115 (68 per cent) passed; and for the City and Guilds of London Institute examinations 389,231 sat and only 281,706 (72 per cent) passed. There are, however, bound to be students who drop out of courses during the earlier stages before they have registered to sit for the examinations and these will increase the student wastage rates, in some cases, quite considerably.

It could be argued that the technical institutes have concentrated too heavily on part-time day release. Shortly after the first technical institute was established, in 1971, Houghton reported that a quality further education system could only be developed if there was true cooperation between Government and industry.[2] The report went on to say that the part-time day release system would be the best method in a compact situation like Hong Kong and there would be no special advantages in running sandwich and block-release courses.[3] Writing in the same vein Hunting said that the territory should, "... aim for at least 50 per cent of the work, in each main field to be in part-time day or sandwich courses."[4]

---

1. Statistics of Education 1977, Further Education, vol. 3, England and Wales, HMSO.
2. Houghton et. al. op. cit. p.81, para. 37.
3. Ibid. pp.52 and 53, para. 2.39.
4. G.A. Hunting, Report on a Visit to Hong Kong (Part B) (5 to 20 September 1975) (representative from TETOC) para. 14.

The Education Department expressed a similar view in the 1977 Green Paper on Senior Secondary and Tertiary Education, saying that craft and technician education was usually most successful when conducted on a part-time basis, in conjuction with employment, providing practical training on-the-job.[1]

However, while part-time study can, in optimum circumstances, provide relevant technical education in step with practical experience, it can also have the disadvantage of allowing too little time for the adequate treatment of the theoretical basis of a subject.[2] Also, part-time day release courses do lead to a lower rate of academic attainment compared to full-time classes. One of the reasons for this, as previously mentioned, is that the full-time student is able to spend about three times as many hours in an institute a week compared to his part-time day release counterpart. He is also able to concentrate better on the intricacies of his studies to the exclusion of a job.[3] There is no doubt that the theoretical studies required by the technician can be more effectively covered in courses which include substantial periods of full-time attendance. The Commonwealth Secretariat seminar, which was held in Hong Kong in 1976, came to the conclusion that technician education should ideally be provided, not through courses which are 100 per cent institution-based, but through sandwich or block-release courses.[4] Day-release and evening courses are not so satisfactory for initial technician courses because of the work situation and the demand on the individual. Because the theoretical content of a craft course is less than for a technician course, the above comments do not apply to the same extent. In 1979, the Diversification Committee also recommended that serious consideration be given to introducing a sandwich

---

1. Senior Secondary and Tertiary Education ... op. cit. p.26, para. 7.3.
2. Hunting, op. cit. para. 14.
3. G.A. Hunting, Report on a Visit to Hong Kong (Part B) (3 to 20 September 1975), para. 14(b).
4. Technical Education and Industry, Report of a Commonwealth Regional Seminar/Workshop organised by the Commonwealth Secretariat and the Education Department in Hong Kong (28 September to 7 October 1976), p.5, para. 4.

system.[1]

All full-time students in the technical institutes who are following courses of more than one year's duration are, where possible, attached to industry during their summer holidays. However, to find suitable places where a student can really learn something is often difficult.[2] It is for this reason that the running of sandwich courses for institute-based students has not been pursued with more vigour. In the same way, the Haking Wong Technical Institute advertised two sandwich courses for industry-based students in mechanical and marine engineering, in 1979, but because the proposed courses were not well supported they were cancelled.[3]

In Britain, in the early 1970s, there was a move away from part-time day release towards sandwich and block-release.[4] Up to August 1980 no such marked trend had taken place in Hong Kong, largely because both industry and technical education have been much more recently established and have not reached the same degree of sophistication, in many ways, as their counterparts in the United Kingdom. In Hong Kong, it has been difficult to persuade employers to release employees on a voluntary basis to attend part-time day release courses and to persuade them to release staff to attend sandwich or block-release courses has proved still more difficult.

Some progress has been made, however, and, during the 1979/80 institute year four block-release courses, in mechanical and electrical engineering, which consisted of 18 classes (compared to 249 part-time day release classes) were run.[5] However, most of these students came from one firm, namely the investor-owned, public utility company, China

---

1. Report on Diversification 1979, op. cit. p.236, para. 393.
2. (40)ED(TE)114/6 (7 December 1978), passim.
3. (67)ED(TE)110/23 (April 1980); and Technical Institutes (joint) Prospectus 1979 - 80, pp.110 and 152.
4. The Future of Further Education, Coombe Lodge Report Collection of Papers, volume 3, no. 19 (1970), p.9.
5. Enrolment Report for the Technical Institutes, 1979/80 (9 January 1980), p.2, para. 4.3.

Light and Power.[1] In a 1980 survey of employers, 385 out of 535 establishments said they preferred part-time day release courses for technicians and, in the same survey, 774 out of 972 employers said they preferred part-time day release to block-release for craft courses.[2]

During the 1979/80 year the Hotel-keeping and Tourism Department introduced a form of integrated course, which was popular with some hotels, in which students spent three days in the Haking Wong Technical Institute and two days a week working in a hotel, for which they were paid $20 a day plus travelling expenses.[3] The technical institutes have always given encouragement to industry to sponsor students and have given them preference. Most of these students have been studying on a part-time day basis although a few have been sponsored on full-time courses.[4] It is quite common for employers to pay institute fees for their employees although, in some cases, this is only done on the satisfactory completion of a course.

In spite of their shortcomings, including high drop-out rates, there is little doubt that part-time day release courses have served Hong Kong well in the 1970s.[5] However, sandwich and block-release are educationally superior in many respects, especially for technician students, although they are not necessarily so cost-effective and it is sometimes not easy to plan the teaching "blocks" to give a uniform load to teaching staff.[6] The Education Department has always said that it was prepared to introduce sandwich and block-release courses as soon as industry was prepared to accept them and this will probably be a development of the 1980s.[7]

---

1. (67)ED(TE)110/23 (April 1980).
2. Report on Survey of Part-time Day Release Courses, Hong Kong Training Council, op. cit. (1980), p.9.
3. (67)ED(TE)110/23 (April 1980).
4. TI/83/11 (5 January 1970).
5. (24)ED(RB)692/78 pt. 3 (20 June 1980); and (11)ED(RB) 692/78 pt. 3 (10 January 1980).
6. (67)ED(TE)110/23 (April 1980).
7. Working Party Report ... op. cit. p.52, para. 4.18.

Conclusions

While it was proposed, in 1968, by the Principal of the Technical College, that the Morrison Hill Technical Institute should only run craft courses, it was finally concluded that all five technical institutes should run not only craft but also a reasonable proportion of technician courses. Throughout the 1970s this proved to be the correct decision. It allowed the institutes to recruit better qualified staff and to purchase better equipment, in order to run the higher level courses, thus giving them better standing in the eyes of the public. There was also a gradual trend to take on more technician work in the 1970s and, with the transfer of more technician programmes from the Polytechnic to the institutes in the early 1980s, there is no doubt that this will continue. This move should, however, be monitored closely to ensure that craft courses, which have always been the institutes' main task, do not suffer as a result.

When the five technical institutes were first planned, the intention was to run courses to meet the main needs of the manufacturing and service industries and commerce at craft level and, jointly with the Polytechnic, to meet similar needs at technician level. It appears that these objectives have generally been met. For example, the 1980 Hong Kong Training Council survey invited suggestions for new courses to be run in technical institutes and the Polytechnic and 154 were received.[1] The Committee on Technical Training in Institutions of the Training Council, which was responsible for the survey, felt, however, that most of the courses suggested were essentially subjects which were already covered in the syllabuses of existing courses. It went on to say that if there is sufficient demand some of these subjects should be offered as short or specialist courses.

The rapid build-up in part-time day release student

---

1. Report on Survey of Part-time Day Release Courses, Hong Kong Training Council, op. cit. (1980), p.15, paras. 4.12 and 4.13.

numbers depended very much on the successful launching of the apprenticeship scheme, although the Education Department has always given top priority to these courses. It can be concluded, in retrospect, that placing emphasis on these courses was correct. Part-time day release courses are a decided improvement, educationally, on evening only classes and industry was not prepared to accept sandwich and block-release courses in the early 1970s. There have been problems and one of these has been the high drop-out rate of part-time day release courses. It is recommended that more block-release, sandwich and similar courses, which are integrated with industry, be introduced as soon as industry is ready to accept them.

When the apprenticeship scheme was introduced, it was contended by some that it should have been entirely on a voluntary basis and employers should not have been compelled to sponsor apprentices in designated trades, on part-time day release courses. If this had been the case there is little doubt that numbers would have been considerably less, which would have resulted in a more poorly educated work-force. While the scheme has not been popular with everyone it should be accepted that some methods which are found to be necessary in emerging countries would neither be tolerated nor necessary in a more developed nation.

CHAPTER 5

THE GOVERNANCE OF THE TECHNICAL INSTITUTES

Introduction

The technical institutes, like the Technical College, have always been Government institutions under the direct control of the Director of Education and staffed by civil servants. The Technical College was handed over to a Board of Governors on August 1, 1972, when it became the Hong Kong Polytechnic, an autonomous body. Both before and since that date, suggestions have been made that the technical institutes should also be autonomous.

Although there is no firm consensus, various opinions have been put forward. These include that the technical institutes should be run by the Hong Kong Training Council, or by the University and Polytechnic Grants Committee with a formal link with the Polytechnic. Another view is that the technical institutes should become autonomous, under a Board of Governors, with their own administrative organisation. A contrasting point of view is that, as the institutes have done a good job in the past, they should remain within the Government Education Department, although it has also been suggested that a new Government department should be established which would include both technical education and industrial training. All these views are examined in this chapter.

The governance of the technical institutes

The governance of the technical institutes has been a matter of concern ever since the first one was established in 1969. Like the technical institutes, the Technical College, which was established as the Hong Kong Trade School in 1937, was a Government institution administered by the Director of Education. When J.W. Gailer was in Hong Kong, representing the United Kingdom Ministry of Overseas Development, from December 23, 1966 to 5 January 1967, to review technical education and training, he recommended that the Technical College should be given greater autonomy and placed under a

board of governors.[1] These recommendations culminated in the Polytechnic being established on 1 August 1972, when the Board of Governors and the new Director assumed responsibility for the new institution, taking over the campus of the former Technical College.[2] As we have seen, the Polytechnic was then placed under the University and Polytechnic Grants Committee.

At the time that thought was first given to the Technical College becoming autonomous, in 1968, consideration was also given to the Morrison Hill Technical Institute, which had not then been established, becoming autonomous.[3] At that time, the Principal designate of the Morrison Hill Technical Institute was of the opinion that some degree of autonomy was necessary, either on the lines of a college of further education in Britain or by giving the technical institute a certain degree of freedom within the Government Education Department.[4] It was eventually decided that it should remain a Government institution and it should not be given any greater flexibility but should be administered in the same way as a Government school or college.

At the time, this decision was probably correct. There were limited expertise and resources in technical education in the late 1960s and the Institute would have been too small to become independent on its own. For example, if it had become autonomous it would have had to set up its own estates office to supervise maintenance of the building and the equipment. A purchasing section would have been necessary as well as an accountancy and finance section, a personnel section and a public relations section. To set these up would have meant heavy overhead expenses when there was only one comparatively small technical institute to service. While the technical institutes were Government institutions and their staffs civil servants they could make use of the massive resources within Government. After all, Government

---

1. J.W. Gailer, The Development of Technical Education and Training in Hong Kong 1967 (March 1967), pp.16 and 17, para. 6.5.
2. Hong Kong Polytechnic Prospectus 1976/77, p.33.
3. (54)ED(GR)4005/55IV (2 December 1968).
4. (16)TI/10/1 (9 December 1968).

is the largest single employer and, on 1 September 1980, out of a total work-force of 2,268,800, 134,157, or 5.9 per cent, were within Government.[1] As Government institutions the technical institutes rely upon the Public Works Department to undertake building work and maintenance, the Supplies Department for purchasing, the Government Printer and the Information Services Department for public relations. In addition, the Education Department and the Government Secretariat assist with such matters as staffing and recruitment, management services and financial planning, to name but a few.

While the technical institutes have been able to bring these powerful forces to bear, nevertheless, being a Government institution has had its drawbacks. For example, when spending the tax-payers' money, Government has to be almost entirely sure that a decision is correct before it takes action, even if time is of the essence. With a large organisation like Government this tends, on occasions, to make it slow, cumbersome and conservative both in decision making and in implementation.[2] It was largely for these reasons that J.R. Devereux, Principal of the Kwun Tong Technical Institute, wrote in 1978;

> Looking back over the history of Government administered technical education it is difficult not to avoid the conclusion that it does not fit very happily into the Education Department.[3]

While it has been shown, in this thesis, that the technical institutes have achieved a great deal as Government institutions, there is something to be said for Devereux's

---

1. Census and Statistics Department.
2. Report and Certificate of Director of Audit on the Accounts of the Hong Kong Government for the Year Ending 31 March 1980, passim.
3. J.R. Devereux, The Quality of Technical Institute Education (24 August 1978), p.2, para. 1.3.

point of view. After all, the institutes' full-time staffs are Government servants and such procedures as recruitment[1] (and, in extreme cases, dismissal) and purchasing of equipment and materials take longer with a Government institution than with an autonomous body such as the Polytechnic, the Examinations Authority or the Productivity Centre.

The Advisory Committee on Diversification raised the question, in 1979, because it felt that, with the pace of diversification increasing, a greater degree of flexibility of response to the needs of industry would be required by the technical institutes when new courses are requested.[2] The Committee therefore recommended that the question of whether the technical institutes could achieve greater flexibility of response if they were moved from the Education Department, and placed under the control of the Training Council or came under the jurisdiction of the Polytechnic, should be investigated.

The Director of Education, K.W.J. Topley, however, agreed with J.N. Henderson, the Commissioner for Labour, that the Training Council was not a suitable body in its present form, even if made statutory, to take over the technical institutes.[3] It was felt that, as it consists mainly of industrialists, it was more concerned with training than with education. Moreover, the educational element is large and very important in technical institute courses particularly at the technician level, and it was considered that this educational element can be organised only by those who are truly familar with educational processes.[4]

It was also felt that the University and Polytechnic Grants Committee should not be involved in craft work which forms the bulk of the technical institute courses.[5] This

---

1. D.D. Waters, A Series of Papers ..., Supplement to Paper Four - Staffing and Manpower Plan (January 1973), passim.
2. Report of the Advisory Committee on Diversification 1979 (30 November 1979), p.233, para. 386.
3. (11)ED(RB)692/78Pt3 (10 January 1980), p.4, para. 2(d)(iv); and CR30/581/78II (23 January 1980).
4. Ibid.
5. Ibid.

was because it was at too low a level, namely completion of Form Three, and also because the UPGC had limited expertise in this field. K. Legg, the Director of the Polytechnic agreed with this view but, nevertheless, felt that ties could be still further strengthened between the Polytechnic and the technical institutes.[1] While a number of institute student leavers do go on to the Polytechnic for further studies (the number was estimated to be 1,082 in 1980[2]), it might be possible to establish closer links and for the technical institutes to become "associate colleges" of the Polytechnic even though they did not come under the direct control of either the Polytechnic or the University and Polytechnic Grants Committee. With such an arrangement it should be possible for the Polytechnic to accept technical institute Diploma and Certificate results, for entry to its advanced courses, instead of relying entirely on "A" level subjects.[3] Such a link could also facilitate technical institute staff undertaking research and consultancy work. Up to the present, no progress has been made regarding these proposals.

There are further possibilities other than the two suggested by the Committee on Diversification. For example, the technical institutes could remain within the Government Education Department and a board of governors could be appointed for the institutes overall, although each institute could have its own sub-board or advisory committee. This board of governors would need to be a broadly-based, independent body consisting of prominent industrialists, civil servants, educationalists, principals, as well as representatives from staff and students. The industrialists would have to represent the main employers and trade associations in Hong Kong in order that they could put forward their views at council meetings. The council would be largely responsible for the

---

1. Minute 17, ED(RB)692/78 Pt.3 (10 July 1980).
2. ED(TE)112/1 (27 March 1980).
3. Minute 17, ED(RB)692/78 Pt.3 (10 July 1980).

running of the technical institutes and would be given autonomy and decision-making powers over the running of courses, over internal administration and management, and over the spending of the budget within limitations laid down by the Government.[1] As an alternative, each institute could have its own board of governors although this would be rather cumbersome. However, if the technical institutes remained within the Government, such "governing bodies" would have restricted power and would tend to be in an advisory capacity only and this would make them of limited value.[2]

Another alternative is that the technical institutes could remain with the Education Department but its Director could be given greater freedom to administer them with, for example, a "block financial vote", to spend as he thought fit, rather than close control of funds being exerted by the Government Secretariat.[3] While this sounds attractive it is doubtful if the technical institutes could be given preferential treatment over other sections of Government.

A further alternative, which is a modification of the above, is for the craft courses to be handed over to industrial training centres, which would be administered by the Training Council, leaving the technician courses in the technical institutes administered by the Education Department.[4] This suggestion has its drawbacks. Not only are there unlikely to be sufficient training centres for several years to come but also, as has been previously pointed out, neither the Training Council, nor indeed the training centres, are either equipped or capable of handling the educational element of courses even at craft level. This alternative would also still leave the technician courses with the Government.

---

1. A. MacLennan, Educating and Training Technicians, Commonwealth Secretariat (England, 1975), p.120.
2. G.A. Hunting, Technical Institutes, Hong Kong (October 1975), p.10, para.33.
3. (62)ED(TE)112/1/2 (7 May 1980).
4. J.W. Gailer, Visit to Hong Kong, 13 to 16 June 1971 (16 August 1971), pp.2 and 3, para. 2.3.

Another alternative would be to set up a new Government department of technical education and training separate from the (general) Education Department, as existed in Singapore from 1968 to 1973.[1] However, this department only survived five years largely because it lacked flexibility and, as with all government departments, it tended to be rather bureaucratic. As a result, Singapore decided to free technical education and training from unnecessary Government control and to provide funds on a block-vote basis. Until 1973, industry in Singapore had only been involved to a limited extent and it was decided that with approximately 40,000 people (who had previously been employed by the British armed forces) to be retrained, that industry would have to be involved to a far greater extent.[2] For similar reasons it is felt in Hong Kong that, while setting up a separate Government department would give technical education enhanced status, it would not be the correct solution as was found from experience in Singapore.

One of the disadvantages of technical institutes being within Government is that all full-time staff are civil servants and "hiring and firing" are slow procedures thus restricting flexibility. Even if staff are recruited on agreement (contract) terms it is still a lengthy procedure. In addition, many small matters have to be referred to the Government Secretariat for decisions.[3] These include increased rates of pay for part-time lecturers, approval to purchase items of equipment over $10,000 in value and approval for additional small items of expenditure.[4] Also, while technical institutes remain within the Education Department, there is a tendency for them to be treated in the same way as schools and any request for a separate staffing structure for technical institutes, for example, is likely to be

---

1. Robert Bray and Leung Kam-fong, Report on a Study Tour to Singapore (25 May to 7 June 1980), para. 4.1.
2. Discussion with Leung, acting Senior Education Officer, Education Department, on the above report (14 April 1981).
3. (31)ED(TE)124/4 (28 February 1979), p.2.
4. (68)ED(TE)4/4/15/6704/77 (2 June 1978); and J.R. Devereux, The Quality of Technical Institute Education (24 August 1978), passim; and (38)ED(RB)692/78 Pt.2 (24 July 1979).

rejected no matter how justified. In this way, no precedent is set and relativity is maintained between technical institutes and colleges of education.

It was perhaps right that the technical institutes should have been Government institutions during the 1970s as this allowed them to employ the powerful resources that Government possesses. Today, however, they are well established and will have to provide more advanced courses in the future to keep pace with diversification and greater sophistication within industry than has been the case in the past. In addition, the technical institutes are being physically enlarged to accommodate more students, thus, each will have a complement of about 190 full-time staff, including both teaching and non-teaching staff, when fully developed. With five technical institutes in existence at the end of the 1970s this gives a total full-time staff of approximately 950 and, if eight institutes are in being by the end of the 1980s, there is likely to be a total staff of about 1,520.[1] For comparison, the autonomous Polytechnic, during 1979/80, had 770 teaching, 197 administrative and 1,017 technical, clerical and minor staff posts on its establishment. It therefore would appear that the wisest move would be for the technical institutes to be made an autonomous body and to be handed over to a board of governors in the same way that the Government run Technical College was handed over to form the Polytechnic in 1972. Since then, the Polytechnic has made remarkable progress and it is doubtful if such strides would have been made if the institution had remained within the Government.[2] However, it took four years from the time the proposal was first decided upon to the actual handing over of the Polytechnic and it is doubtful if a transfer of the technical institutes could be completed in much less time.

---

1. The Development of Higher Education in Hong Kong, Report of the Working Group on Higher Education, February 1980, p.18, para. 9.5.
2. Hong Kong Polytechnic Annual Report 1979 - 80, passim.

A similar form of governance would enable the institutes to serve industry and the economy in a more effective way. Then, at some stage in the future, when the Hong Kong Training Council has become statutory and is well established, a merger could take place between it and the proposed technical institute board. This would operate on the lines of the Vocational and Industrial Training Board in Singapore.[1]

Of interest and relevance to the question of the governance of the technical institutes are the widely diverging views of the principals of the five institutes. H. Cameron of Lee Wai Lee, for example, feels that the technical institutes are flexible as they are and that this has been fully demonstrated by the speed with which new courses have been mounted.[2] He is also of the opinion that the Training Council is too "training orientated" to take over the technical institutes and that, if they come under the Polytechnic, the accent would be on higher level work and the craft courses would suffer. He advocates that the institutes should remain with the Education Department. H.K. Yung, acting Principal of Kwun Tong, agreed with Cameron that the technical institutes should remain, as now, part of the Education Department although he feels they needed to be more flexible.[3] On the other hand, D. Ng, Principal of Kwai Chung, is of the opinion that the Education Department is mainly geared for general education and, largely for this reason, the technical institutes would function better if they came under the umbrella of the Polytechnic.[4] A. Fong-Yan, Principal of Morrison Hill holds the view that, because the Training Council is an independent body, and consists largely

---

1. D.D. Waters, General Levy v General Revenue for Financing Industrial Training and 'Disestablishment' of Technical Institutes (12 September 1979); and D.D. Waters, the Vocational and Industrial Training Board Singapore (18 September 1979).
2. (40)LWLTI/8/27 (14 January 1980).
3. (19)KT/132/13 (11 January 1980).
4. KCTI/2/28 (14 January 1980).

of industrialists, who know what industry needs, the technical institutes would be more responsive if they came under its direct control.[1]

R. Bray, the Principal of Haking Wong, takes an entirely different view and advocates the setting up of a "department" of technical institutes which should have the same degree of autonomy as the Polytechnic.[2] In addition, technical institutes should work under the aegis of the Economic Services Branch and not the Social Services Branch. The Advisory Committee on Diversification had, in fact, recommended that such a transfer should be investigated.[3] No one else, however, appeared to be in favour of such a move as it was contended that education, albeit technical, is very much a social concern and this aspect could suffer unduly if the technical institutes came under the Government Economic Services Branch.

The technical institute principals also sought the views of their teaching staffs and it appeared that almost all of the latter preferred that the technical institutes remain within the Government.[4] Although they could stand to gain, for example in salary, if the technical institutes became autonomous, as did many Polytechnic staff after 1972, nevertheless they appeared to be sceptical of the change and preferred the security of Government service. If the technical institutes became autonomous it would be necessary to safeguard the rights of the staff as occured at the Hong Kong Polytechnic and in Singapore.[5]

Conclusions

The possible autonomy of the Morrison Hill Technical

---

1. (74)TI/11/23 (II) (9 January 1980).
2. (34)HW/1/1/1 (16 January 1980).
3. Report of the Advisory Committee on Diversification 1979 (30 November 1979), p.233, para. 385.
4. Discussed with J.R. Devereux, acting Assistant Director of Education (Technical) (21 April 1981).
5. Hong Kong Government Gazette no. 16/1976, GN817, p.1182, pensions (Special provisions) (Hong Kong Polytechnic) Ordinance (Chapter 91); and Republic of Singapore Government Gazette, Act, Supplement, no. 32 (8 December 1972), Industrial Training Board Act 1972, p.374.

Institute, together with the Technical College, was first considered in 1968 before it was established and, although it was decided that when the Technical College became the Polytechnic it should be autonomous, it was also decided that the Morrison Hill Technical Institute should remain within the Government Education Department. It is felt that, for the 1970s, this was the correct decision. The Government is the largest employer in Hong Kong and, as such, has a large administrative machinery for handling, among other things, purchasing, maintenance, personnel and accountancy which, as Government institutions, the technical institutes utilise. A single technical institute at Morrison Hill would have been too small to become autonomous on its own and to have provided for such functions would have meant expensive overheads. There was also limited expertise in technical education in Hong Kong, in the early 1970s, and the strong support that Government could give was valuable.

However, in the late 1970s as more technical institutes came into operation, it has been suggested on various occasions that they should be granted some form of autonomy in order to increase flexibility and to reduce rigidity which tends to be present in any government organisation. Several suggestions have been put forward, including one by the Advisory Committee on Diversification, that the technical institutes should come under the Training Council. However, this would not be a satisfactory arrangement as when this body becomes statutory, and more training centres are established, it will have more than enough to keep it occupied without embracing the technical institutes. In addition, the Training Council has limited expertise in education being more concerned with training.

Nor is it felt that the technical institutes should be formally linked with the Polytechnic and come under the Universities and Polytechnic Grants Committee. Such bodies are normally only concerned with technological education and although, in Hong Kong's case, it also embraces technician education, it is felt that the span of control would be too great if it also had responsibility for craft education which

requires a rather different expertise. While it has been suggested that the technical institutes should be given greater flexibility within the Education Department, it would be difficult to make a case to give them more favourable treatment, for example a block vote, than any other Government institution, such as schools or colleges of education. For this reason, the setting up of a new Government department to include both technical education and industrial training is also not favoured.

Instead, it would seem more sensible for the technical institutes to become autonomous under a board of governors. There are now sufficient institutes to form a body large enough, together with the suitable supporting organisation, to make such a move viable. Later, after both the autonomous technical institutes and the statutory Training Council, possibly renamed the "Hong Kong Training Authority", are firmly established, consideration could be given to their amalgamation, thus forming a body similar to the Vocational and Industrial Training Board in Singapore. While the views of principals of technical institutes differ considerably on the question of autonomy, the staff, in general, prefer to remain within the Government largely, it is suspected, because of the greater degree of security. If the technical institutes were to become autonomous the rights of the staff would have to be safeguarded as was done for the Technical College staff who transferred to the Polytechnic.

Strong informal links have always existed between the technical institutes and the Polytechnic and, although it is not suggested that both types of institutions should come under the UPGC, nevertheless, links between them should be strengthened still further. This would make it easier, for example, for institute staff to undertake research and consultancy work and for the institutions to make greater use of each others' facilities to the benefit of all concerned.

CHAPTER 6

ATTITUDES TOWARDS TECHNICAL EDUCATION AND STANDARDS OF EDUCATION IN TECHNICAL INSTITUTES

Introduction

This chapter examines two main issues; firstly attitudes in Hong Kong towards technical education in general, and this then leads on to the technical institutes and the standard of education provided in them.

Some prejudice still exists towards technical education and most parents would prefer their children to carry on beyond Form Three in a secondary school rather than to join a craft course in a technical institute.[1] This view is not, however, always shared by the less affluent. Nevertheless, people's opinions on technical education are changing even though the evolution is a gradual one, and this transformation is examined in this chapter.

Buildings together with their facilities, the curricula, the capabilities of the students and staff (including teaching and support staff) are the important factors which combine to create the environment and determine the standards in an educational institution.[2] Class size and student-teacher ratios are also important and these, together with staffing, have been looked at in Chapter 2. Industry, however, also has an influence on standards in technical institutes and its views are sought on many matters, either through the Hong Kong Training Council, through professional or trade associations or directly from various firms. For example, draft technical institute syllabuses are submitted to the Training Council, which has wide industrial representation, for its views,

---

1. D.D. Waters, The Form Three Leaver and Opportunities in Technical Institutes, Careers Masters' Seminar (4 April 1979), p.11, para. 10.1.
2. D.D. Waters, The Quality of Education in Technical Institutes (19 September 1978), passim; and ED(TE)112/2/3 (1 September 1978), passim.

before new programmes are implemented.

Technical institutes, as we have seen, developed rapidly in student numbers in the 1970s and it is important to consider whether this rapid growth had any adverse effects on the quality of education provided. This is best done by analysing various surveys conducted by the Education Department, the Training Council, and the Government Home Affairs Department jointly with the Hong Kong University. These survey reports, together with comments and criticisms made by industrialists, employers, students and visiting educational advisers also enable conclusions to be arrived at regarding the standard of education in technical institutes.

The validation and recognition of courses by overseas as well as by local bodies (for example, the Polytechnic admits technical institute Certificate holders to its Higher Certificate programmes) also influence standards in technical institutes by attracting better quality students, and the demand for student places is also examined. It can be argued that one of the best ways of determining standards is to see how readily students are employed on graduation and this too is analysed. Finally, an assessment is made of the way standards in the technical institutes have changed since the first one was set up in 1969.

Attitudes towards technical education

In Hong Kong, in the past, cultural traditions have led to an overwhelming demand for an academic type of education.[1] Generally, Chinese parents like their children to carry on as long as possible with their full-time studies, preferably in an elitist school, and, as Williams points out:

> There is evidence that Chinese families are more willing than people almost anywhere else in the world to invest their own resources in education that seems to give good private returns ...[2]

---

1. Working Party Report ... op. cit. p.46, para. 4.4.
2. P.R.C. Williams, Application of Rate of Return Analysis to Educational Planning in Hong Kong, Paper II (13 March 1978), p.7, para. 13(a).

R.F. Simpson also makes the same point:

> ... the vast majority of secondary school pupils in Hong Kong are seeking a verbal academic education in English in the hope that they will gain university admission and a professional appointment...[1]

For example, in a survey conducted at the Technical College, in 1966, 95 per cent of three, year-one classes in building, structural engineering and surveying, totalling 102 students, said they would have preferred to have studied in Form Six in a secondary school, rather than in the Technical College.[2]

Although the change is gradual, there are welcome signs of an increasing realisation that industry can provide rewarding and challenging careers and that education must be adjusted accordingly, both in structure and in content.[3] Simpson asserts that the many students who are unable to take up the kind of employment that requires them to have a general education which is mainly concerned with preparation for university entrance, are left with expectations that are unlikely ever to be fulfilled.[4] They are then reluctant to take up a post in one of the manufacturing industries which they have come to regard very much as second best. As a result, Hong Kong has always had a number of "perpetual students" who are always trying to further their studies despite the fact that many of them are capable only of limited further advancement, and the subjects of their studies are largely unrelated to the social or economic needs of the community. This phenomenon is often a form of escapism which, as Simpson points out, is approved socially.[5] One

---

1. R.F. Simpson, The Development of Education in Hong Kong Problems and Priorities (Pt I), Ph.D thesis (London 1967), p.142.
2. Report on the Survey into the views of Students on the Various Courses in which they had Enrolled, at the Technical College (December 1966), item (7).
3. Working Party Report ... loc. cit.
4. Simpson, loc. cit.
5. Simpson, loc. cit.

meets similar attitudes in other emerging countries.[1]

By contrast, it is interesting to examine the results of a study undertaken in 1967, on a large resettlement housing estate at the Eastern end of Hong Kong Island, by the Hong Kong Council of Social Service, a voluntary body which receives a Government subvention.[2] The study reported that just under two-thirds (62 per cent) of all people in Chai Wan believed that to get ahead in life, a boy of secondary school age should go to a school where he could learn practical skills, which are useful for working in a business or in a factory, rather than going to a school where he might eventually be able to sit the Hong Kong School Certificate (now the Hong Kong Certificate of Education) Examination. There is no doubt that nowadays people, in the lower economic strata, are far less oriented towards the importance which is usually attached by the Chinese towards academic studies and higher education, rather than technical studies and working with one's hands, than was at one time supposed. It is mainly for this reason that three of the five technical institutes are situated near large, resettlement, housing estates.

The families that are better off financially tend to be less interested in their children studying technical subjects. For example, the students of the old Technical College and the present technical institutes generally come from the less affluent families. This point is illustrated when the student bodies of the two universities, two post-secondary colleges and the Polytechnic are considered. In these five post-secondary institutions, the average family income of day students, in descending order, is Shue Yan, the University

---

1. Technical Education and Industry, Report of a Commonwealth Regional Seminar/Workshop in Hong Kong, organised by the Education Department, Hong Kong and the Commonwealth Secretariat, United Kingdom (28 September to 7 October 1976), pp.33 and 34.
2. Chai Wan Social Needs Study, A Report of a Survey Carried out Among Organisations and Residents in the Chai Wan District of Hong Kong, the Hong Kong Council of Social Service (September 1967), passim.

of Hong Kong, Baptist College, the Chinese University and last, the Polytechnic.[1] Shue Yan College, where the wealthier students are, has no technical subjects although it does run courses in business and commerce. The two universities and Baptist College have some technical subjects and the Polytechnic, whose day students tend to come from the less well off families, offers almost entirely technical and vocational subjects. While many of the better off students do join the two private post-secondary colleges, Shue Yan and Baptist, because they are unable to obtain places in a university or in the Polytechnic, nevertheless, the above order of ranking is an indication of the esteem paid to technological and technical education. In other words, students from the less affluent families are more likely to study technical and technological subjects while the students from wealthier families are more likely to study academic subjects.

Employers' views on the subject are illustrated by a survey conducted in 1978: 46.5 per cent of the employers questioned considered that Form Five graduates from secondary schools disliked blue-collar jobs, 27.8 per cent said that they were interested in blue-collar work, while 16.8 per cent felt that they "did not mind" such work.[2]

In the same survey (which was administered by the Government Home Affairs Department but the field work was carried out by staff and students of the University of Hong Kong), the views of a number of Form Four and Form Five grammar-school students were sought regarding technical education (Table 26).

---

1. Report of Opinion Survey on Green Paper on Senior Secondary and Tertiary Education, Government Home Affairs Department and University of Hong Kong (10 March 1978), p.19.
2. Ibid. p.24.

Table 26 : Views of Form Four and Form Five Grammar School Students On Technical Education[1]

Percentage of Form Four and Form Five students, who were interviewed, who :	Percentage	Remarks
(a) were "happy" that they had been admitted to a grammar school	45.9	-
(b) were not interested in technical education	41.5	Percentage of (a) above
(c) were interested in technical education	20.1	ditto
(d) thought that grammar schools had higher standards than technical institutes	20.2	-
(e) would have preferred to enter a technical institute instead of a grammar school	46.4	-

From Table 26 it appears that slightly more pupils (46.4 per cent) would have preferred to have studied in a technical institute, than those who were "happy" with their choice of a grammar school; nevertheless, only a small proportion (20.1 per cent) were interested in technical education. When these results were discussed by directorate staff of the Education Department, shortly after the survey was conducted in 1978, it was generally agreed that the figures favouring the technical institute were higher than expected. One must always remember, however, that one always tends to think it is greener on the other side of the mountain. Because of this, many grammar-school pupils would, quite naturally, wish that they had gone to a technical institute instead.

In contrast, at a discussion which took place with

1. Ibid. pp.7 and 8.

representatives of the Joint Technical Institutes Students' Association in 1981, all representatives were of the opinion that, for most Hong Kong students, their first choice would normally be to continue their general education and a place in a technical institute would be their second choice.[1]

In the same survey, which was conducted by the Home Affairs Department, 32.6 per cent of the parents interviewed preferred their children to study in a technical institute, rather than in a grammar school because they believed they would have better job opportunities, while 22.5 per cent would have preferred them to enter Form Four in a Grammar school.[2] The remaining 44.9 per cent either "did not know" or would have preferred their children to give up their full-time studies and go out to work, in some cases for domestic reasons.[3]

In spite of the results of the two surveys, one in Chai Wan and the other conducted by the Home Affairs Department which show that many people look upon technical education favourably, the substantial general impression is that the average Hong Kong boy does not want to become a craftsman.[4] That is why grave fears have been expressed, that too many Form Four and Form Five school places were being provided and that this would result in too few pupils wanting to enter craft courses in technical institutes. For example, in the debate in the Legislative Council on the 1977 Green Paper on Senior Secondary and Tertiary Education, two prominent industrialists, S.L. Chen and Francis Tien both believed that the proposal to provide subsidised senior-secondary education for 50 per cent (this was later increased

---

1. Formal discussion, D.D. Waters with Ng Shiu-wah, President, and Tang Che-keung and Yeung Piu-yin, representing the views of the Joint Technical Institutes Students' Association, meeting at Haking Wong Technical Institute, 2 May 1981.
2. Report of Opinion Survey on Green Paper on Senior Secondary and Tertiary Education, op. cit. p.12.
3. Spoken D.D. Waters/Augustine K. Chui, Home Affairs Department contact for the survey (4 August 1981).
4. D.D. Waters, The Status of Craftsmen and the Popularity of Craft Courses in Technical Institutes (11 January 1978), passim.

to 60 per cent by 1981 and over 70 per cent by 1986, in the subsequent White Paper) of the 15-year old population would pose a serious threat to the future development of industry.[1]

They both contended that with greater prosperity more parents will, in the future, be able to afford the high fees in private schools to allow their children to go on beyond Form Three if they fail to get a subsidised place. Chen and Tien both held the view that most Chinese parents would prefer their children to be promoted to a senior secondary form rather than to join a course in a technical institute. The average Hong Kong 15-year old knows that the status of most craftsmen is not high largely because, usually, comparatively low wages are paid.[2]

While the status of technical education has improved considerably over the past 25 years, and especially over the past ten years, one can generally conclude that the change is not rapid enough and that the average student would still prefer a place at Form Four in a secondary school rather than in a technical institute. However, the change will no doubt continue and, with the greater degree of sophistication of technology and the change in the structure of industry, this will probably lead to further social change including higher wages and better fringe benefits and working conditions. With the high price of materials and the increasing cost of labour this could lead to the need for a higher ratio of technicians and the deskilling of more jobs so that the work can be carried out by operatives rather than by craftsmen.[3] The importance of craftsmen to Hong Kong is, however, clear and approximately 9,140 young people will need to enter technically-based industries, as craftsmen, every year.[4]

Later, regarding the "image" of the technical institutes,

---

1. S.L. Chen, Hong Kong Legislative Council, Official Report of Proceedings (6 July 1978), pp. 1175 and 1176.
2. Working Party Report ... op. cit. pp.53 and 54, para. 4.24.
3. D.D. Waters, Initial Thoughts on Diversification and the Upgrading of Industry in Hong Kong (23 August 1978), p.4, para. 15.
4. Working Party Report ... op. cit. p.48, para. 4.9; and Training Council Manpower Surveys.

the Director of Education, K.W.J. Topley, noted in 1976 that, technical institutes were not sufficiently inspiring to the "man in the street". They are too "clinical" and impersonal. He hoped that, in time, people would look to these as a source of hope for a better career and that each would, in time, develop one or more specialisms and would become an avenue of second and great opportunities for those who have not progressed beyond three or five years of secondary education.[1] As one would perhaps expect, J.R. Devereux, the Principal of the Kwun Tong Technical Institute, when commenting on the above minute said, "are we too clinical and impersonal? I do not believe so!"[2] He went on to say that technical institute students were not under continual academic pressure which may have been a feature of their secondary school life. Institutes provide a reasonably broad, general education and some skills on which to build their careers. "I think we are succeeding", said Devereux, "and they seem to enjoy their work". It is interesting to see that, as Topley became more familiar with the technical institutes, his views changed and, at an Education Department Directorate meeting, in 1979, he said that they were well managed, well equipped with staff and machines, and the students were keen. He felt the institutes were fulfilling a useful role in the community.[3]

In addition to the views of the Director of Education changing it is also apparent that, between 1976 and 1979, standards did, in fact, go up. During this period the institutes did became more firmly established, additional equipment was purchased and new staff were recruited. In addition, some new disciplines were introduced, such as hotel-keeping and tourism, and design, so that the institutes were not so "technical" and not so narrow.

While the facilities in the technical institutes are

---

1. K.W.J. Topley, ED(TE)124/4 (18 March 1976), Minute 1.
2. J.R. Devereux, The Future Role of Technical Institutes (20 October 1976), p.8, para. 9.
3. Minute 31, Directorate meeting (22 March 1979), written as a result of a visit by the Director of Education to Kwun Tong Technical Institute (20 March 1979).

generally of a reasonable standard, understandably, those in the Polytechnic are considerably better as it is engaged in work mainly at a higher level. Consequently, when similar courses are run in both the Polytechnic and the technical institutes - for example, a two-year, full-time Diploma course in a similar subject - the Polytechnic attracts the better applicants. However, when more Diploma and Certificate courses are transferred from the Polytechnic to the technical institutes, in the early 1980s, there will not be the same degree of direct competition between the two. When the institutes are running more programmes at technician level they will need to recruit more highly qualified staff and purchase additional equipment. This should help to raise standards considerably and to improve the reputation of the institutes in the eyes of the public.

When comparing standards between Polytechnic and technical institute students the 1980 Polytechnic Higher Certificate examination results are, one would imagine, not untypical of other courses.

Table 27 : Comparison of 1980 Results, of Past Polytechnic and Morrison Hill Technical Institute Certificate and Diploma Graduates, in the Polytechnic Higher Certificate Examinations in Building Studies[1]

Institution of previous studies	Award	Percentage pass for core units (compulsory)	Percentage pass for additional units (optional)
Polytechnic	Diploma	100	87.5
	Certificate	97.5	95.0
Morrison Hill Technical Institute	Diploma	95.4	89.4
	Certificate	86.9	62.3

1. ED(TE)108/5/2^{IV} (19 May 1981).

It is interesting to see that the Technical Institute Diploma holders actually did better than their Polytechnic counterparts for additional units of study. However, in all other respects, the Institute students did less well than the Polytechnic students. This is not really surprising. While there are no details available of the general education level of the Diploma students on the TEC programmes, as given in Table 27, generally, the majority of the Diploma students in the Polytechnic had done some work at Form Six level.[1] For example, in 1977, out of the 1,095 students who were admitted to full-time Diploma courses at the Polytechnic all but 2.4 per cent had done work at Sixth Form level. Of these, the majority (808) had passed two or more "A" level subjects and many were qualified to enter the Hong Kong University or the Chinese University.

By comparison, in 1980, the number of students on full-time Diploma courses in the technical institutes who had undertaken some studies at Sixth Form level, mostly with one or two "A" levels, was considerably fewer.[2] In Lee Wai Lee, for example, one of the most popular institutes, partly because it runs such courses as design and commercial studies and also because it is very accessible, the figure was 62 per cent. At Kwai Chung, an institute which is not so easy to reach, the figure was 9 per cent.

Diploma courses are intended, in the main, for Form Five secondary school leavers. It would be wrong if the present trend at the technical institutes was to continue so that, at some stage in the near future, the majority of the Diploma students had completed Form Six. They would then be overqualified for the courses and would be more suitable for a technologist level course or a Higher Diploma course at the Polytechnic than a Diploma course in a technical institute. In most cases, overqualified students

---

1. (1)A1 ED(RB)20/568/78ED(SCR) Appendix 6.
2. Figures supplied by Principals of Technical Institutes.

only join a Diploma course because the higher level courses are heavily oversubscribed and they are unable to obtain a place.

The reputation and standards of the technical institutes are obviously important to the staff and students.[1] No one wants to work in a second-rate institute. One way to improve the reputation would be to run more higher level courses, to admit more students who have completed Form Six and to provide more general education. The technical institutes were not, however, set up for this purpose. With only five institutes, if these measures were to be implemented, industry would be deprived of much needed facilities for the education of personnel at craft and technician level. In the same way, if over-qualified students enrol for a course they are likely to be discontented and, later, will not be satisfied with the jobs for which they have been educated and trained.

The demand for student places

Before proceeding further it is enlightening to examine the number of applications for student places in the technical institutes. Tables 28 and 29 give figures for the academic years 1969/70 to 1979/80, as far as these are obtainable.[2] As has been stated before, priority has always been given to part-time day applicants and, normally, all those who were qualified and sponsored by their employers were admitted. In addition, special craft (preliminary) classes (pre-craft classes) have been mounted for underqualified applicants. For these reasons, Tables 28 and 29 do not show a high over-subscription rate for part-time day places. However, the rapid build-up of such classes, from 41 students in 1969 to 7,920 in 1979/80, is an indication of the popularity of these courses, bearing in mind that no trades at technician level and many trades at craft level were not designated under the Apprenticeship Ordinance.

A better guide to the popularity of technical institutes

---

1. J.R. Devereux, Future Role of Technical Institutes (20 October 1976), p.6, para. 4.2.
2. (40)ED(TE)114/2 (May 1980).

Table 28 : Morrison Hill Technical Institute Admission Statistics, 1969/70 - 1974/75

		1969/70	1970/71	1971/72	1972/73	1973/74	1974/75
Number of applications (Qualified and unqualified)	Full-time	*	3,833	3,869	3,925	5,713	8,145
	Part-time day	*	*	455	513	694	1,470
	Evenings only	*	16,249	17,076	16,240	24,240	30,901
Number of Year-One places	Full-time	300	620	720	720	680	840
	Part-time day	80	520	520	660	720	880
	Evenings only	4,400	5,000	5,300	5,900	6,600	5,900
Ratio of applications to Year one places	Full-time	*	6.2:1	5.4:1	5.5:1	8.4:1	9.7:1
	Part-time day	*	*	0.9:1	0.9:1	1.0:1	1.7:1
	Evenings only	*	3.2:1	3.2:1	2.8:1	3.7:1	5.2:1

* Figures not available

Ref.: (40)ED(TE)114/2
May, 1980
YMM/tt

Table 29 : Technical Institute Admission Statistics, 1975/76 - 1979/80

		1975/76	1976/77	1977/78	1978/79	1979/80
Number of qualified applicants	Full-time (Technician)	2,690	3,353	4,575	8,113	15,535
	Full-time (Craft)	2,873	2,605	3,081	2,690	6,014
	Part-time Day (Technician)	200	279	286	463	963
	Part-time Day (Craft)	584	816	2,165	2,971	3,961
	Part-time Evening (Technician)	*	*	6,147	8,449	15,440
	Part-time Evening (Craft)	*	*	14,628	18,678	20,193
Number of planned places for new students	Full-time (Technician)	600	840	1,120	1,160	1,500
	Full-time (Craft)	1,120	1,275	1,565	1,590	1,670
	Part-time Evening (Technician)	*	*	3,056	3,713	4,930
	Part-time Evening (Craft)	*	*	6.054	6,953	5,305
Qualified applicant to planned places ratio	Full-time (Technician)	4.5:1	4.0:1	4.1:1	7.0:1	10.4:1
	Full-time (Craft)	2.6:1	2.0:1	2.0:1	1.7:1	3.6:1
	Part-time Evening (Technician)	*	*	2.0:1	2.3:1	3.1:1
	Part-time Evening (Craft)	*	*	2.4:1	2.6:1	3.8:1

* Figures not available

Ref.: (TE)114/2
May, 1980
YMM/tt

is to examine the demand for full-time places. Virtually all these applications come from school-leavers. From Table 28 it can be seen that, in 1970/71, the first year the Morrison Hill Technical Institute was situated in its own premises, the ratio of applications (from both qualified and unqualified applicants) for first-year craft and technician places on full-time courses was 6.2 to one. This ratio varied from year to year : for example, in the recession years of 1973 and 1974, when it was not so easy to find employment and more school leavers applied to join courses in the Morrison Hill Technical Institute, it was 8.4 to one and 9.7 to one respectively.[1] Again, when two more institutes came into operation in 1975 and more places were made available, the technician ratio dropped to 4.5 to one. The ratio reached an all time high in the summer of 1979 when there were 10.4 qualified applicants for every full-time technician place. This was largely because of the increasing number of pupils completing their secondary school education up to Form Five and wishing to continue their studies, and probably because of the improved reputation of the technical institutes.

Tables 28 and 29 also show that the number of applications for evening only places increased during the same period. For example, the total number of applicants in 1970 was 16,249 but, by 1979, this figure had increased to 35,633. The number of application forms issued for evening only courses increased from 81,000 in 1969 to 166,000 in 1979. This is not striking. This is probably because a number of other educational institutions, including voluntary agencies (such as Caritas), private and Government (for example, the Adult Education centres) either opened or expanded their facilities for evening classes during the same period. While few of these institutions ran vocational, technical education courses a large number ran commercial, general education and hobbies classes. What is, however, significant is the demand for places on craft level evening only courses (excluding Pre-General and General). The number of application forms

---

1. J.R. Devereux, Future Role of Technical Institutes, (20 October 1976), p.3, para. 2.3.3(a).

returned increased from 1,820 in 1969 to 21,515 in 1979 an increase of about 1,082 per cent. This was a good sign and shows the increasing interest being shown in craft level work.

Why is it that, in spite of the increase in the number of institutes, from one in 1970 to five in 1979, courses have been more heavily over-subscribed than ever, especially for day classes? Firstly, there has been a rapid increase in the population amounting to about 31 per cent from 1969 to 1980.[1] In addition, the secondary school population increased by about 97 per cent during the same ten-year period. Both these factors have increased the pressure from secondary-school leavers for places in post-secondary educational institutions. While the Polytechnic expanded rapidly, its work was almost entirely at post Form Five level and industry relied on the technical institutes for providing technical education for craftsmen.[2] With the introduction of the Apprenticeship Ordinance and an increased awareness among enlightened employers of the importance of technical education, there has been a relatively large expansion in the technical institutes.

Also, up to 1975, there was only one technical institute and all institute students had to commute to Morrison Hill on Hong Kong Island. As soon as new institutes were established, in other parts of the Territory, these automatically attracted applicants from new neighbourhoods, partly because of the improved accessibility and also, with more places available, applicants would feel that their chances of getting admitted were better. In addition, in the 1970s, industry became more sophisticated and, as a result, people in all walks of life appreciated the importance of technical education more.[3] In addition, a great deal more publicity has been given to technical education in recent years. All these factors have stimulated would-be applicants'

---

1. Census and Statistics Department, Hong Kong Government.
2. Hong Kong Polytechnic Annual Report 1979-80, passim.
3. Report of the Advisory Committee on Diversification 1979, passim.

interest and the increase in the number of potential institute students demonstrates that today, the reputation of the institutes, if measured by the demand for places, is higher than ever.

Recognition of courses by overseas bodies

The Cantonese saying, which translated reads, "local ginger is not hot" applies to many things in Hong Kong including educational qualifications. Generally speaking, people prefer a qualification that has overseas recognition rather than a certificate which is only recognised locally. Given that Hong Kong has been a British Crown Colony since 1841,[1] it is only natural that it should turn to the United Kingdom for recognition of some of its technical education courses.

The Technical College first obtained recognition from overseas bodies for some of its three-year, full-time Diploma courses in the late 1950s and additional courses were recognised in the 1960s. Such bodies included the Institute of Builders (now the Chartered Institute of Building) and the Royal Institution of Chartered Surveyors.[2] In the second half of the 1960s and the early 1970s, Higher Diploma courses in structural engineering, electrical engineering, electronic engineering, mechanical engineering and production engineering were granted exemption from the Part One Examination of the Council of Engineering Institutions. Some construction craft courses were also validated by the City and Guilds of London Institute. These examinations were conducted in Chinese and Hong Kong was the first place to have such an arrangement with the City and Guilds whereby examinations were conducted in the vernacular. These craft courses, together with their recognition by the City and Guilds, were transferred to the Morrison Hill Technical Institute in 1969. Since then, more British institutions have recognised technical institute

---

1. Hong Kong 1981, p.230.
2. Hong Kong Technical College Prospectus 1970-71, passim.

courses.[1] These include the Chartered Institute of Building, the Society of Electronic and Radio Technicians, and the Institution of Electrical and Electronic Technician Engineers. Mention has already been made of the Technician Education Council (TEC) in Chapter 3.

In order to obtain recognition for the various technical institute courses or programmes it has been necessary to submit full details to the bodies concerned. This information usually included qualifications of teaching staff, accommodation and equipment available and syllabuses. Also, in the case of TEC for example, external moderators are engaged and TEC itself also monitors the examinations. In some cases, TEC for example, (as mentioned in Chapter 3), visits have been paid to the technical institutes by representatives of the overseas bodies concerned. Such recognition has helped to raise standards in technical institutes and to keep them at an internationally recognised level. In turn, students also like an internationally recognised qualification as this would be an advantage if they were to emigrate.[2]

Moreover, some technical institute students have performed well in internationally run examinations. For example, in 1977 and 1978 graduates from the two-year Diploma programme in Electronic Engineering at Morrison Hill Technical Institute were awarded first prizes in City and Guilds of London Institute examinations.[3] Also, in 1979, a graduate of the same course was awarded the British Institution of Electrical Engineers' prize. On other occasions, students (as well as staff) have been awarded prizes in competitions and examinations.[4] While such outstanding performances by students do not necessarily reflect the overall standards of the students in technical institutes, they nevertheless provide an indication of the kind of performance that a few

---

1. Morrison Hill Technical Institute Diplomas and Certificates Recognised by British Professional Institutions, press release 159/75 (4 September 1975), 9/4/3393/71.
2. Formal discussion, D.D. Waters with representatives of Joint Technical Institutes Students' Association, loc. cit.
3. (10)TI/175/4 (5 May 1980).
4. (85)ED(TE)112/2/2.

students (or past students) are capable of in international competition, even when they are working in a foreign language.

A further indication of the level of work of institute students in international examinations is given by the TEC Diploma and Certificate results for courses in building, civil engineering, and ship-building and ship-repairs during the years 1977 to 1979 and 1978 to 1980 (recognition was given to other programmes later).[1] The total number of students who registered with TEC and paid their fees amounted to 522 and, of these, 489 or 93.7 per cent passed their examinations. This result is, generally, satisfactory.

Employment of technical institute graduates

A further way to assess the standards of the courses in technical institutes is the degree to which those students successfully completing full-time courses were able to obtain suitable employment, and the level of salary that employers considered that the graduates were worth. As the majority of the part-time students are already in employment this yard-stick can only really be used for full-time students. In order to monitor closely the employment situation, surveys have been conducted, by post, by the Technical Education Division of the Education Department since 1975. In order to make the questionnaires easier for craft students to understand they have been printed in Chinese. As is to be expected, not all students returned them and the response rate varied from 62 per cent in 1976 to the highest response rate of 66 per cent, which was in 1978. (These are similar to the Hong Kong University returns).[2]

---

1. (26)ED(TE)110/18/2 II.
2. Employment Surveys of Full-time Graduates of Technical Institutes.

Table 30 : Employment of Full-time Technical Institute Graduates

Item / Percentage of Students / Year	1976	1977	1978	1979	1980
Percentage of employed graduates who:					
(a) Found jobs within three months of graduation including those who continued with their full-time studies	84	88	91	97	94
(b) pursued part-time education	81	89	90	89	90

Table 30, from the surveys, reveals that, every year, the majority of graduates were able to take up employment within a relatively short period of finishing their full-time courses. In 1980, 41 per cent joined industry, 16 per cent commerce, 14 per cent went to public utilities, 5 per cent to Government and 6 per cent to other fields. In turn, 12 per cent continued with their full-time studies and, as at early October, 6 per cent were still unemployed.[1]

While these employment figures look impressive it must be remembered that, as we have already seen, only about two-thirds of the full-time students completed and returned the questionnaire and, generally speaking, it is the more successful student who does so although that is not to say that a large number of the remaining one-third, who did not complete it, did not find suitable employment.[2]

However, it is not altogether surprising that the majority of the graduates should be able to find employment

1. Employment Survey of Full-time Graduates of Technical Institutes (1979/80), (January 1981).
2. P.R.C. Williams, (5)ED(TE)112/1/3II (6 January 1980).

within a relatively short time of leaving the institutes. From 1976 to 1980, Hong Kong enjoyed relatively full-employment with three per cent of the work-force being unemployed in March 1978 and 3.2 per cent in March 1980, although the figure had increased to 4.3 per cent by September 1980.[1] Those who had been unable to find employment within three months of leaving an institute were often rather particular about the kind of job they were prepared to accept.

Chinese students are hardworking and keen on improving their lot and Table 30 reveals that, for the years 1976 to 1980, 81 to 90 per cent of the full-time graduates continued with their studies on a part-time basis.

During the period under review there was, as one would expect, an upward trend in wages, as illustrated by Table 31.[2]

Table 31 : Average Wages/Salaries Received by Technical Institute Graduates

Type and level of graduate		1976	1980	Percentage increase
		(HK$)	(HK$)	
Post Form Five	Technical	986	1,585	61
	Commercial	845	1,197	42
Post Form Three	Craft	508	884	74
	Commercial and service sector	628	942	50

Hong Kong is a "free market" as far as wages are

1. Figures from Government Census and Statistics Department.
2. Employment Surveys of Full-time Graduates of Technical Institutes, op. cit.

concerned and there is no set minimum wage. Because of relatively full-employment over the last few years employers have had to increase wages in order to attract workers.[1] It is interesting to see, from Table 31, that wages for technical students have increased more rapidly than for commercial and service sector students. This would appear to be because there has been a shortage of technical personnel in recent years, whereas there has not been the same shortage of commercial personnel as white-collar work is more sought after. It is also encouraging to see, from Table 31, that the highest increase in pay for the four-year period (74 per cent) was for the average starting pay for craft students, as they have generally been underpaid for several years. This was a move in the right direction.[2] The same may be said for the fact that with the exception of the starting pay for post Form Five commercial students, the overall average wage increase has more than kept pace with the 43 per cent increase in the cost of living from March 1976 to March 1980.[3]

Table 32 compares the starting pay for two-year full-time Diploma leavers from the technical institutes with those from the Polytechnic and it is interesting to note that the average starting salaries of the former were higher than those paid to the Polytechnic leavers.[4] Employers have spoken well of the technical institute Diploma holders and many prefer such students because they follow courses which have a larger practical content. However, it is difficult to make precise comparisons because the Polytechnic has a "Student Welfare Unit" handling student affairs and their surveys are accompanied, where necessary, by follow-up work and their return of the full-time Diploma leavers is as high as 100 per cent. For this reason, the less successful student is also included and this tends to reduce the figure for the average salary earned.

---

1. (30)1ED(RB)692/78 pt. 3 (1980), p.7, para. 26.
2. D.D. Waters, The Status of Craftsmen and the Popularity of Craft Courses in Technical Institutes (11 January 1978).
3. Government New Consumer Price Index.
4. ED(TE)112/1/10 (9 June 1980).

Table 32 : Starting Pay for Two-year, Full-time, Diploma Graduates from the Polytechnic and the Technical Institutes

Type of course	Institution	1976	1977	1978	1979
		(HK$)	(HK$)	(HK$)	(HK$)
Technician	Technical institute	986	1,053	1,147	1,294
	Polytechnic	886	966	1,136	1,271
Commercial and service industry graduates	Technical institute	845	826	931	1,006
	Polytechnic	1,115	1,109	1,287	1,371

It can also be seen that the average starting pay for technical institute commercial students is considerably less than for their Polytechnic counterparts. This is probably because the technical institutes did not start to run Diploma courses in business studies until 1976 and, as a result, the true value of the student leavers in this field is not yet fully appreciated by industry.

Representatives of the Joint Technical Institutes Students' Association were of the opinion that the starting pay for technical institute leavers given by the large well-organised firms is fair but that often the pay given by the small firms is too low.[1] This is, in fact, frequently the case.

To sum up the results of the employment surveys one may refer to an editorial in the Chinese press which, translated, said that technical institute graduates were popular among employers and that more young people were now

1. Formal discussion, D.D. Waters with representatives of Joint Technical Institutes Students' Association, op. cit.

willing to join industry.[1]

The views of students and past students on the quality of education in technical institutes

The views of students and past students on the quality of education in technical institutes have been sought on various occasions and in different ways. While their views are obviously important it must be remembered that many of the craft students are only 15 or 16 years of age and rational answers may not always be forthcoming. In most cases, however, because of the size of the sample in the various surveys, it is felt that a reasonably true picture is obtained. In addition, in his discussions with students, for the purpose of these studies, the researcher has been impressed with the objectiveness of the views expressed.

Table 33 : Opinions of Students Attending Craft Courses in Technical Institutes[2]

	Percentage
Percentage of craft students, who were interviewed, who :	
(a) were "happy" that they had been admitted to a craft course	71.8
(b) would have preferred to have continued in a secondary school	22.2
(c) thought they would have better employment opportunities by studying in a technical institute	26.2
(d) thought that educational standards in grammar schools were higher than in technical institutes	42,3
(e) thought that studying in a grammar school would give them higher social status than studying in a technical institute	26.9

1. Editorial, Wah Kiu Yat Po (11 June 1980).
2. Report of Opinion Survey on Green Paper on Senior Secondary and Tertiary Education, op. cit. p.15.

As Table 33 shows, almost three-quarters of the craft students in the survey, conducted by the Government Home Affair Department and the Hong Kong University in 1978, were satisfied that they had been admitted to a craft course. This result surprised a number of the directorate staff in the Education Department when the survey was discussed, as it was higher than expected. One reason was that most of the students would have come from the less affluent families and many would not have been allocated a place in a secondary school and could not easily afford to study in a private school.

Bearing in mind the importance that has been placed on apprenticeships in recent years, some pains have been taken to seek the views of part-time day students. Such a survey was conducted in 1979 when the views of all technical institute, final-year, part-time day release students (1,574) were sought.[1]

Table 34 : Views of Final Year, Part-time Day Release Students on Technical Institute Courses

	Percentage
Students who considered :	
(a) their courses bore some relevance to their jobs	89.6
(b) their courses were highly relevant to their jobs	26.8
(c) they were satisfied with their courses;	
(i) craft students	65.7
(ii) technician students	76.8

The results were predictable. Technical education courses

1. Survey of Part-time Day Release Students Attending Technical Institute Courses (1978/79), pp.1 to 3.

are broad-based in order to give a student wide overall knowledge and to make future studies of new technical developments easier. In contrast, many students' jobs tend to be narrow. For these reasons, one would expect that some of the students (some of whom might give subjective answers) would consider that parts of their studies were not directly relevant to their work.

In 1978, the views of students attending the pre-craft and craft courses in the Kwai Chung Technical institute were given to senior staff of the Institute by Labour Department industrial training officers who were responsible for the training of the apprentices.[1] The students generally considered that discipline had been good but, where this was not so, stricter action should be taken. There is no doubt that discipline has deteriorated in educational institutions over the past few years, but this is a world-wide, social trend. However, in Hong Kong it was not until 1971 that there was a primary-school place, with six years of full-time education, for every child. Now, with all children going on for at least three-years of secondary education, it is no longer for the selected minority. Indeed, some who have no wish to study, are now forced to do so. This contributes to poor discipline.

The views of past students are, in many ways, more useful than present students as they are older, more mature, and normally in employment. As detailed earlier in this chapter, employment surveys have been conducted, on an annual basis, since 1975.[2]

---

1. (16)KCTI/3/50 (21 July 1978).
2. Comparison Between the Graduate Employment Surveys of the Technical Institutes and the Hong Kong Polytechnic (1976 - 1979), p.3, ED(TE)112/1/10 (9 June 1980).

Table 35 : Views of Full-time Technical Institute Graduates on Taking up Employment

Item	1976	1977	1978	1979
Percentage of employed graduates who:				
(a) considered their studies in technical institutes were relevant or highly relevant to their jobs	57	56	59	63
(b) were "quite satisfied" or "very satisfied" with their jobs	43	56	85	79

Although the percentages of full-time graduates who considered their technical institute studies relevant to their jobs were not so high as for the part-time day release students, one cannot really expect them to be as, with full-time students, there are always some who take up jobs for which their technical education was not directly related. However, there is a general upward trend both in the percentage of students who were satisfied with their jobs, partly no doubt because salaries have improved, and also among those who considered their technical institute courses were relevant to their jobs.

Probably one of the most useful and interesting surveys conducted was in 1979 when questionnaires were sent to all the 455, 1973 full-time craft and technician graduates of the Morrison Hill Technical Institute.[1] The response rate was 43 per cent which compares favourably with a similar survey conducted in England where the response rate was 43.5 per cent.[2] However, in the United Kingdom survey students had only left their technical colleges for between one to five

1. Tracer Study of Morrison Hill Technical Institute, Full-time Graduates of 1973 (August 1979), pp.1, and 2.
2. Technicians Within the Construction Industry, East Anglian Regional Advisory Council for Further Education, Building Sub-Committee (Britain, Autumn 1973).

years and in Hong Kong people tend to move house more frequently. This would tend to show that although the Hong Kong return of 43 per cent appears low it was satisfactory.

Table 36 : Tracer Study (Conducted in 1979) of all Full-time Students who left Morrison Hill Technical Institute in 1973[1]

Details	Percentage	Remarks
(a) Past students who were employed :		
(i) technician		
A. technical	100	
B. commercial	90	The remaining 10 per cent were attending full-time courses
(ii) craft		
A. technical	95	In addition one per cent were seeking work and four per cent were undertaking full-time courses
(b) Students who had joined apprenticeship scheme		
(i) technician	8	
(ii) craft	48	
(c) Students who confirmed that their technical institute course was related, to some degree, to their employment		
(i) technician	100	
(ii) commercial	92	
(iii) craft	68	
(d) Students who had attended part-time classes since graduating from their full-time course	66	Ratio between day-release and evening classes approximately one to seven

1. Tracer Study of Morrison Hill Technical Institute, Full-time Graduates of 1973, loc. cit.

As can be seen, almost all the past students who returned the questionnaires were in employment, although ten per cent of the commercial students and four per cent of the craft students were undertaking full-time study. Of these two groups 38 per cent were in universities, 25 per cent were in the Polytechnic and 13 per cent were in the technical institutes. As one would expect from Chinese students, a large number (66 per cent) had attended part-time studies since they finished their full-time course in the Technical Institute. It can also be seen that many of the students considered their work was related, to some degree, to their full-time technical institute course although the figure (68 per cent) was not so high for craft students. It could be that some of the craft graduates found salaries were low and decided to move into some other form of employment.

Table 37 : Salary Range of Full-time Students who left the Morrison Hill Technical Institute in 1973[1]

Type of student	1973 (on graduation)		1979 (date of survey)	
	Percentage	Salary a month (HK$)	Percentage	Salary a month (HK$)
Technician	75	Less than $800	71	Over $2,700
Post Form-Five commercial	70		30	
Craft	89		51	Ranged from $1,100 to $1,700

It can also be seen that the technician (technical)

1. Ibid. p.1.

students have done rather better than their commercial counterparts in that a bigger percentage were receiving over $2,700 a month. This was quite a good salary in 1979, six years after leaving a technical institute. However, 17 per cent of the craft students were receiving, on average, $950 a month six years after graduating from their full-time course.[1] This is low and, as has been pointed out earlier in this thesis, there is a need to raise salaries for craft apprentices and craftsmen in Hong Kong.

It must be stressed again that the more successful student is the one who is likely to return the questionnaire, nevertheless the study does provide a considerable amount of useful information and more similar studies should be carried out.

The views of employers on the education provided in technical institutes

The views of employers have been sought on various occasions regarding the education provided in technical institutes and surveys have been conducted by the Hong Kong Training Council. Although the Council was set up by His Excellency The Governor, most of the members on the Council itself, as well as the members of the various committees and boards, are not civil servants. For example, during the April 1979 to March 1980 year the total number of members from Government totalled 112 whereas the number of members from industry and other non-government institutions, for example the Polytechnic and the universities, amounted to 241.[2] This means that less than one-third of the members were civil servants. In addition, the Training Council and all but two of its 25 boards and committees were not chaired by Government servants. This was done to make them more independent. It is true, however, that the administrative

1. Ibid. p.5.
2. 6th Report of the Hong Kong Training Council, April 1979 - March 1980, pp.56 to 94.

and clerical services are provided by the Government Department of Labour.

In 1976, a survey was conducted by the Hong Kong Training Council to assess employers' views on vocational, prevocational and secondary modern education.[1] The institutions covered under "vocational training" included the Morrison Hill Technical Institute, Kwun Tong Vocational Training Centre and Wong Tai Sin Practical Training Centre (which was closed in 1979). The sample covered only 307 employers and the response rate was 83 per cent. Their views were as follows :

Table 38 : Views of Employers on Vocational Training (sic) in Hong Kong[2]

Remarks	Number of Respondents	Percentage
Employers who considered that vocational training was :		
(a) highly disappointing	1	1.05
(b) not successful	7	7.37
(c) "neutral"	24	25.26
(d) successful	61	64.21
(e) highly successful	2	2.11
	95	100.00

As 66.32 per cent rated vocational training as "successful" or "highly successful" and only 8.42 per cent rated it as either "not successful" or "highly disappointing, it must be assumed that, to quote the words of the report, "... employers who were familiar with the vocational training programme had a high opinion of the programme". The drawback with this survey was that the views expressed, in Table 38,

1. Report by the Committee on Vocational Training on the Survey on Employers' Assessment of Vocational Training and Prevocational and Secondary Modern Education Conducted in August 1976, passim.
2. Ibid. p.12.

covered the three educational institutions en bloc and it is not possible to obtain specific views on the Morrison Hill Technical Institute alone, although the overall view of the three institutions may be considered as satisfactory. For this reason, this survey is of limited value.

A more useful survey was conducted by the Training Council in 1978, to ascertain employers' opinions on technical institute courses.[1] A questionnaire was prepared which was sent to all employers known to be running, or who had previously run, apprenticeship schemes as well as to a number of members of the Hong Kong Hotels' Association. In this case, there were 843 respondents from 11 different industries.

Table 39 : Views of Employers on Technical Institute Courses

Remarks	Number of employers
Technical institute courses are strongly related to the actual needs of industry :	
(a) strongly agreed	170
(b) agreed	568
(c) undecided	72
(d) disagreed	33
	843

As the figures in Table 39 confirm, the general conclusion in the report was, "... technical institute courses are related to the actual needs of industry".

In the survey, employers were invited to make suggestions

1. Summary of Findings of a Survey on Employers' Views on Technical Institute Courses, Committee on Training in Technical Institutions, Hong Kong Training Council (13 November 1978), passim.

for improving technical institute courses and the principals, in turn, replied.[1] The main comments were, firstly, that entry standards to some courses were too high (12 respondents) to which the principals replied that, if dropped, this could lead to a lowering of standards and the dilution of course contents. Entry standards were, in fact, agreed by the Training Council. It was also suggested that different levels of courses should be run for students of different educational standards but again the principals disagreed saying that this would be uneconomical. They suggested that the planned introduction of a modular scheme for craft courses would help to some degree.

It was also proposed that more practical work should be included in the curriculum (34 respondents) but the principals felt that some employers had confused technical education with industrial training which was the responsibility of industry. Five employers said they preferred evening courses for their employees rather than part-time day and again the principals disagreed saying that these were a poor substitute. However, they did support a proposal that some courses should be shortened from four to three years, although no further action was taken because of the link up with the Technician Education Council course structure.

At the same time that this survey was being conducted, in 1978, the Committee on Technical Training in Institutions asked the ten Industry Training Boards of the Training Council for their views on technical institute courses.[2] These, in line with the survey mentioned above, were generally favourable. Overall comments concluded that technical institute courses were related to the actual needs of industry and that an employee who had attended a technical

---

1. Summary of Comments on Views of Employers on Courses in Technical Institutes, by Principals of Technical Institutes (March 1979), (46)ED(TE)108/8/13.
2. Views of Industry Training Boards on Technical Institute Courses (20 December 1978); and (5)HKTC/ELEC/GEN III (22 January 1979); and (33)HKTC/CLD/MTG III (1 February 1979).

institute course was much more useful to an employer than one who had not. A number of more specific comments were also made regarding course content and the running of new courses. The survey seeking the views of employers and the other seeking the views of the Training Boards were carried out by the Committee on Technical Training in Institutions of the Hong Kong Training Council. This Committee has a non-Government Chairman and Vice-Chairman and approaching two-thirds of the members represent the major employers' associations in Hong Kong. These associations can be critical of Government if there is a need. It is felt that the two surveys in question, although of a general nature, are useful and do give a fairly accurate overall assessment of the courses provided in technical institutes. Again, while some criticisms were received, these were only from a limited number of people and there was no general trend. It is appreciated, however, that many employers do not give sufficient thought to the filling in of such questionnaires and their main aim is sometimes to dispose of them as quickly as possible. This affects the accuracy of any survey.

Miscellaneous "testimonials"

In addition, in 1977, when the Morrison Hill Technical Institute was preparing to transfer its part-time day release, Higher Certificate Course in Construction to the Polytechnic, in line with the recommendations in the 1977 Green Paper, "Senior Secondary and Tertiary Education", the Training Council wrote to the Director of Education saying :

> "In view of the success enjoyed over the years ... the Institute should continue to run both the Certificate and Higher Certificate courses."[1]

In spite of this request it was still felt necessary to proceed with the plan of rationalisation and the Higher Certificate course was transferred to the Polytechnic. To

---

1. (15)HKTC/Coun/MTG/7 (11 March 1977), ED(TE)11/18/6704/77.

have done otherwise would have been to countermand the policy that all higher level technician courses be run at the Polytechnic.

The Hong Kong Government has engaged the services of a number of overseas educationalists, over the years, to review the technical institutes and some of their comments are worth mentioning. In 1971 Sir William Houghton said, concerning the Morrison Hill Technical Institute :

> It is not possible to be specific on the basis of so short a visit but the general impression gained was of an enthusiastic and well led staff conducting meaningful and well run courses.[1]

He went on to say that more emphasis should be placed on experimental work in laboratories. As a result, more equipment was purchased, largely with the assistance of a £100,000 donation, from the British Government.[2]

Another visiting adviser, J.W. Gailer, said of the Morrison Hill Technical Institute, in 1971,

> The Principal and his staff have obviously spent a great deal of time and thought devising practical courses which will more nearly suit industrial needs.[3]

While Gailer felt that staff development was being pursued with "imagination and vigour" he also felt that additional equipment was required. In turn, another adviser, G.A. Hunting of TETOC, who came to Hong Kong in 1975 to advise on the development of the technical institutes said, at a press conference, "the technical institutes compare favourably with those (colleges of further education) in the United Kingdom."[4]

---

1. Houghton et. al. op. cit. p.45, para. 2.26.
2. ED(TE)6692/111/2.
3. J.W. Gailer, Visit to Hong Kong, 13 - 16 June 1971 (16 August 1971), pp.1 and 2.
4. D.D. Waters, The Future Role of Technical Institutes, (2 September 1976), p.3.

On the other hand, there has been some criticism of the technical institutes. For example, the Ad Hoc Group of Members of the Legislative Council, which was set up to review the 1978 Green Paper, was of the opinion that the level of training in technical institutes was too low and that teaching staff were not so well qualified as they should be.[1] In May 1978, a Legislative Councillor expressed reservations over the standards of teachers in technical institutes.[2]

In contrast to these sentiments the Advisory Committee on Diversification, which consisted mainly of prominent industrialists recorded the view that;

> With certain reservations, particularly about the number of places to be provided at the tertiary level, we are satisfied that the existing and proposed arrangements for vocational education are generally adequate to produce the educated manpower required by industry.[3]

The report, however, went on to say that there was considerable scope for improving the arrangements for industrial training. Although the Diversification Committee was set up by the Governor and was chaired by the Financial Secretary, Sir Philip Haddon-Cave, it consisted almost entirely of members from the private sector. Many of the comments in the report were critical and there is no doubt that if the Committee had felt that technical education, including the technical institutes "were generally inadequate" it would have said so, in the same way that it criticised industrial training.

On file, in the Education Department, are a number of "testimonials" regarding the quality of the education provided

---

1. Q.W. Lee, Legislative Council, Official Report of Proceedings (5 July 1978), pp.1132 to 1143 (p.1135).
2. James M.H. Wu, (46)ED(TE)1/1/107/77 (29 May 1978).
3. Report of the Advisory Committee on Diversification 1979, p.239, para. 397.

in the technical institutes.[1] These include letters from the Hong Kong Telephone Company Limited and from Cable and Wireless Limited regarding the high standard of electronic Technician Diploma graduates from the technical institutes.[2] Details of prizes won by institute students in fields such as television and jewellery are also on file.[3] In an educational institution one will often find a few outstanding students who also possess drive and who will always get to the top, through their own efforts, even if the facilities provided are below standard. However, these few outstanding students, although they are a useful "advertisement", are not a reliable indicator of educational standards overall. On the other hand, letters of appreciation from firms of repute, such as the Telephone Company and Cable and Wireless, who have each, on average, employed about ten full-time, technical institute graduates a year over a period of eleven years, do provide useful supplementary evidence as to the type of students the institutes are capable of producing. Such firms would not write letters of appreciation and come back for large numbers of graduates year after year if standards were not reliable.

Public-relations

On various occasions, industrialists have made it clear that they considered more publicity should have been given to the technical institutes.[4]

In fact, a considerable amount of publicity has been given and this has included an annual poster, a joint prospectus - published annually or bi-annually - career-pamphlets, information sheets, as well as sections included in the Education Department Report and the Hong Kong Year Book, both of which are published on an annual basis.

---

1. (85)ED(TE)112/2/2.
2. DS/TT/E8/RAA (5 March 1980).
3. (85)ED(TE)112/2/2.
4. (20) ED(TE)8/18/6704/77 (22 June 1977); and (22)ED(TE) 108/8/13 (16 February 1979); and Summary of Findings of a Survey on Employers' views on Technical Institute Courses, Hong Kong Training Council (13 November 1978), p.5, para. 8(v).

Numerous press-releases as well as advertisements of courses have also appeared in the press.[1] In addition, open-days,[2] prize-giving ceremonies and exhibitions have been held and a large number of career talks have been given in secondary schools. Furthermore, talks on the work of the technical institutes have been given to various organisations, such as Rotary and Lions' Clubs, and a film on technical education has also been made.[3]

Close contacts have been maintained with industry and these have included circular letters to seek views and to publicise courses, and industrialists have also been encouraged to visit technical institutes.[4] Education Department staff have also appeared on television and radio on many occasions and, while the possiblility of "buying time" on television for advertisements has been considered, this has proved too expensive.

In the light of a suggestion from the Training Council in 1977, the "... efforts (in publicity) should be evaluated and, where necessary, stepped up", "street shows" were organised in conjunction with the Government Information Services Department.[5] These shows consisted of music and singing on the back of a Government lorry and this entertainment was interspersed by demonstrations and talks on the technical institutes.

In addition, the Government Labour Department has done a great deal to publicise its apprenticeship programme and this, in turn, has benefitted the technical institutes.[6] This publicity included full-size advertisements, on the apprenticeship scheme, on four double-decker buses.

---

1. (22)ED(TE)108/8/13 (16 February 1979).
2. (70)ED(TE)110/23 (May 1980), p.4; and (74)TI/71/1 (30 March 1979).
3. (97)ED(TE)112/1/3 (7 August 1979).
4. ED(TE)110/22 (16 November 1979).
5. Report on Survey of Part-time Day Release Courses, Hong Kong Training Council (March 1977), p.16, para. 2(i); and (86)ED(TE)108/73 (15 March 1977).
6. Hong Kong Training Council Paper, HKTC/1 - 79 (March 1979).

There is no doubt that the public-relations work undertaken by the Education and Labour Departments, which has been mostly in Chinese (about 98 per cent of the people in Hong Kong are Chinese), has proved valuable and more people in all walks of life are now better informed about technical institutes and the courses they have to offer.[1] In turn, the literature issued by the technical institutes is in great demand. For example, the Chinese newspaper, "Wah Kiu", reported that of all the pamphlets and information sheets available from the 22 Government Home Affairs Department enquiries centres the most popular is technical institute literature.[2] The technical institutes have also been fortunate in that they have been given good coverage by the mass-media as technical education is generally much sought after news.

Public-relations is, of course, an "open-ended" process and there is no real limit to what can be done. There comes a time, however, when one has to ask the question whether all the time, effort and money that is being ploughed into it is achieving a satisfactory result. In turn, technical institute staff are, after all, not suppose to be high-pressure salesmen. It is probably the case that the emphasis on public-relations has been about right and that, while more money could have been spent, this would have achieved a limited return.[3] One also gets the feeling that what has been done has helped considerably, not only to improve communications, but also to improve the reputation of the technical institutes. It is important that such work continues and new avenues will need to be explored. These could include more informal contacts direct with industrialists, although some heads of departments are already undertaking considerable work of this nature.

---

1. (22)ED(TE)8/18/6704/77 (22 June 1977).
2. Wah Kiu Yat Po (4 May 1978).
3. (11)ED(RB)692/78 pt. 3 (10 January 1980), p.3.

Rising standards

During the period from 1969 to 1980 there is no doubt that standards in technical institutes did rise, in some areas quite significantly.[1] There would have been something wrong if they had not done so. During the 1960s, only a limited amount of technical education was available in Hong Kong for craft and lower-level technician students (this was mainly provided at the Technical College), and thus limited experience was available in this important area of education. A great deal of experience has been gained, in the technical institutes, in the 11 year period under review and a well-established system of technical education, for work at this level, now exists. In the same way that standards in technical education have risen, in most countries, as levels of technology have advanced, so too have standards risen in Hong Kong.

As far as buildings are concerned, the five technical institutes have been built on a semi-standard plan and the only areas that vary, to any marked degree, are the practical teaching spaces such as workshops and laboratories. These differ, from institute to institute, depending on the trades taught. In spite of this standardisation some modifications have been made; for example, the later institutes are larger and more room is available, in some teaching spaces, for each student. At Morrison Hill some of the workshops are rather cramped.[2] Other minor improvements have also been incorporated into the buildings and many of these have been based on experience gained when the first technical institute was established. They include more storage space and students' lockers are situated in more exposed positions to make it easier to detect pilfering and wanton damage.

In addition, the first institute, at Morrison Hill,

---

1. This section of the thesis has been discussed with present and past staff of technical institutes including principals, vice-principals, heads of departments, lecturers and workshop instructors.
2. J.W. Gailer, Visit to Hong Kong 13 - 16 June 1971 (16 August 1971), p.1.

was built on a very restricted and irregular-shaped site (although it is larger since the Victoria Technical School's old building was added as an annex in 1981), whereas the later institutes have more space and a recommendation has been made that sites should be larger still.[1] However, space is at a premimum in Hong Kong and large sites are not easily come by. The standards of finishings, and fixtures in all institutes are high. One could argue that they are too good in some cases and that more economical finishings in workshops, such as more fair-faced brickwork, instead of plastered walls and granolithic dados, would have been acceptable.

One aspect of buildings which has deteriorated over the years is the height of ceilings. The old Technical College building, and others built at the same time, had lofty ceilings. This was considered important because of the tropical climate. Nowadays, for reasons of economy, ceilings in technical institutes tend to be relatively low, although they are considered to be adequate.[2] While it is true the larger sites in the later institutes do provide more recreational space, and they also have more accommodation available for student union and similar activities, nevertheless, it is recommended that, in future institutes, even more space be provided for this purpose.[3]

The technical institutes are now better equipped than Morrison Hill was in the early 1970s, but this, of course, should be the case. Technology has advanced, requiring more elaborate equipment for teaching purposes although, in many cases, basic principles rather than elaborate processes have to be taught. Technical institutes are now generally reasonably well provided with basic equipment although more specialised equipment is required and other items need to be

---

1. The Development of Higher Education in Hong Kong, op. cit. p.18, para. 9.5.
2. J.W. Gailer, Visit to Hong Kong, 13 - 16 June 1971 (16 August 1971), p.1, para. 2.1.
3. The Development of Higher Education in Hong Kong, loc. cit.

replaced.[1] Haking Wong was planned during a recession and, as a result, it was under equipped; additional equipment has, however, been provided since it was first established.[2] There is no doubt that all institutes are under-provided as far as libraries are concerned and this needs to be rectified.[3]

The curricula and syllabuses have also improved considerably as more experience has been gained. For example, the rewriting of a large number of syllabuses in objective format, as required by TEC, was a useful exercise which required the institutes to have a long, concentrated look at the curricula. In the same way, the submission of draft syllabuses seeking the views of industry on a wider scale, including those of the Training Council, has also helped to raise standards. A similar exercise commenced in 1978 to rewrite craft syllabuses in modular format (The first of these syllabuses was introduced in September 1981.) which should do much to raise standards. Curriculum development is a time-consuming exercise and the Education Department is fortunate in that, for schools, special posts have been created for curriculum development officers and these are supported by a large Advisory Inspectorate.[4] In the case of the technical institutes, however, the work falls largely on the teachers themselves and, in the case of small departments, this can mean a heavy task to be undertaken in addition to teaching and other duties.

Also, during the 11 year period under review, a number of courses and seminars have been run, for the staff of technical institutes, largely by the Technical Teachers College: and, together with staff development, in the form of further studies, visits and attachments to educational institutions and industry - both locally and overseas - these have helped

---

1. Sir S.Y. Chung (30 October 1978), ED(TE)112/2/2. (19 May 1981); and (38)AD/KCTI/GEN (14 July 1978).
2. (124)ED(TE)6713/136/2 (7 November 1979).
3. C.H. Bleasdale, Libraries and Resources Centre in the Technical Teachers College and Technical Institutes in Hong Kong, Commonwealth Secretariat Commonwealth Fund for Technical Cooperation (March 1977), passim; and Barry L. Burton, Lina Lam, Lawrence W.H. Tam, Libraries in the Technical Institutes and the Technical Teachers College (April 1976).
4. ED(TE)108/11/1^{III}, passim.

considerably to raise standards.[1] During this period, morale among technical institute staffs has been relatively high and they have willingly undertaken additional work, such as writing syllabuses. An area which will need to be carefully reviewed if standards are to improve still further is the question of support staff, including workshop, laboratory and office staff. During the period under review there was a shortage of such posts.[2] This will become more important with the transfer of additional technician courses from the Polytechnic to the technical institutes.

Perhaps the biggest change that has taken place over the years has been the type of students who have enrolled in the technical institutes. During the late 1960s and the early 1970s there were few prevocational schools (for example, only five were established by 1973)[3] and only five secondary modern schools, and the remaining secondary schools, generally, ran five-year courses. This meant that, to a large extent, the technical institutes depended on secondary school drop-outs for entry to craft courses.[4] At the same time, pupils were not keen to join craft courses. Because of these factors, the educational qualifications of craft students ranged from completion of Primary Six to completion of Form Three. Now, with many more secondary schools running three-year courses, there is not the same shortage of good craft course applicants and educational standards are higher and more uniform with most craft students having completed Form Three or, at the lowest, Form Two. In addition, many more students are applying to join craft classes and most courses are over-subscribed. This means that the institutes are now able to select better students. The same thing applies to technician students and, with more

---

1. D.D. Waters, address at Seminar, Design of Courses of English for Specific Purposes, for teachers in technical institutes (11 June 1980), passim.
2. ED(TE)5/2426/75 (19 September 1978), p.5, para. 9.
3. ED(PREVOC)T/1/78 (undated).
4. (6)ED(TE)2/6704/67[II] (10 February 1978), p.1.

students going on to Form Five and with technical institute courses heavily over-subscribed, institutes are now offered a wider selection. This increase in the numbers of applicants has also, naturally, helped to raise standards.

However, it was not until 1971 that there was a primary school place for all in the respective age group, and it was not until 1978 that every primary school leaver was able to go on for at least three years of secondary education. This meant that, when the Morrison Hill Technical Institute was first established, there was keen competition among students to proceed to further full-time studies. For example, in 1970, of 94,552 primary school leavers, only 70,278 (71%) were promoted to Form One in a secondary school. Thus, in the early 1970s, only the brighter student progressed.[1] As a result, it would appear that students are less hard-working today than they were and there is less parential pressure to be diligent, although the average Hong Kong student still works harder than his average European counterpart. Indeed, the fact that the Hong Kong student works less hard than he did is probably a good thing in some ways as, in the past, all many students did was to concentrate on their studies and often extra-curricular activities and hobbies were totally neglected. In the past, students tended to be well drilled examinees whereas today they are more human and "well-rounded". They are also more outward-going and express themselves more readily by asking questions in class than was formerly the case.

It must be remembered that, unlike their British counterparts, the technician students are learning in a foreign language, namely English, and the fact that this is completely alien to their native tongue does not make it any easier for them. While some public groups have exerted pressure that more teaching in the education system, in general, should be in Chinese, the average student and parent knows that Hong Kong is very much involved with international

---

1. Education Department enrolment statistics.

trade and that the better jobs tend to go to people who have a good command of English.[1] Having said that, however, the overall standard of English is generally lower than in Singapore where several Chinese and Indian dialects are spoken, as well as Malay, thus tending to make English, very much the lingua franca. Most Hong Kong students speak Chinese (usually Cantonese) at home and among themselves.

There has been a big increase in extra-curricular activities and student union activities in technical institutes in recent years and more clubs have been formed.[2] This, of course, is a good thing and is a sign of the social change that has taken place among students in educational institutions in the past decade or so. It would appear that, as was the case when the first institute opened, moral standards such as honesty are generally high and there are still relatively few discipline problems although students are more likely to answer back and to put forward their points of view. This contrasts with ten or fifteen years ago when students tended to be "followers", as Chinese society decreed that great respect should always be shown to the teacher.

However, most of the part-time day students are apprentices and this means that the technical institutes have no say in their selection. Indeed, by far the majority are in designated trades and are compelled by law to attend an institute if they are under 19 years of age. Several are thus studying in an institute against their will and, in extreme cases, warning letters have been served. With the rapid expansion of the apprenticeship system and the big increase in the numbers of designated trades this has caused some discipline problems but, bearing in mind that the average Chinese youth is keen to pursue his studies, the problems have been nothing like those that would be experienced in the West if a similar system were introduced.

---

1. (25)ED5/646/76 (21 March 1979); and David Foulds <u>A Study of Language Requirements in Technical and Commercial Establishments in Hong Kong</u> (1979), pp.36 and 37.
2. ED(TE)118/4, passim.

Again, as one would expect over the years, the technical institutes have made a name for themselves and they are now better known and well established on the educational scene. Indeed, their reputation is probably higher than ever before.

Conclusions

In the past, Hong Kong parents have generally preferred that their children should continue with their full-time academic education for as long as possible, preferably in an elitist school, later to enter a university or, failing that, to take up a "white collar" occupation. However, the lower income groups have always valued technical education, largely because of the special skills for earning one's living which it provides. This was illustrated in the 1967 survey which was conducted in Chai Wan by the Hong Kong Council of Social Service.

Although the change has been a gradual one there are welcome signs that many more students now wish to study technical subjects and later to work in industry than previously was the case. This was demonstrated by a survey conducted, in 1978, by the Government Home Affairs Department and the Hong Kong University although, in the same survey, the majority of employers still felt that Form Five graduates disliked blue-collar work. It would appear that the position will continue to improve although this will depend, to a large extent, on higher wages and better fringe benefits for industrial workers.

Another indicator of the popularity of technical institute courses is the increased demand for places. However, it must be borne in mind that, during the 1970s, there was a 97 per cent increase in the secondary school population, and that more pupils were qualified to enter a technical institute, thus there was a shortage of post-secondary education places and a considerable increase in the demand for places on craft courses.

It would appear that the validation and recognition of technical institute programmes by the Technician Education Council, and by other British bodies, has done much to improve the reputation of the technical institutes. Also, because

many courses are monitored and internationally recognised and external moderators are employed, standards have been enhanced.

The employment of full-time technical institute graduates has been well monitored during the latter half of the 1970s and, as one would expect in a full employment situation, few have had difficulty in finding jobs. During the same period, wages on first appointment increased considerably and more than kept pace with the increase in the cost of living, especially for craft students. This improvement has done a great deal to encourage more students to find employment in industry. A high percentage of past institute students, in various surveys, confirmed that they were generally satisfied with their jobs in industry (although some smaller firms tend to pay low wages) and the courses that they studied in a technical institute were generally related to their jobs. As one would expect in a Chinese society a number of students, on leaving a technical institute, continued their full-time studies and a high percentage continued their studies on a part-time basis.

There has been some criticism of technical institutes by industrialists and, in some ways, this has been beneficial in that it has helped to counteract any complacency. However, in surveys conducted by the Hong Kong Training Council, industry indicated that it was generally satisfied with the technical institutes although a number of suggestions were made for improvements. The Advisory Committee on Diversification also indicated that the existing arrangements for vocational education were adequate.

A great deal of useful public-relations was conducted in the 1970s to generally good effect. Such work should continue and every effort should be made to show that technical institutes are not for second-rate students but for those who are, by temperament, more practical and application oriented.[1]

---

1. (12)HKTC/COUN/MTG(9) (28 February 1978).

During the 11 year period under review it is generally agreed, standards in technical institutes rose, in some areas quite considerably. A limited amount of experience was available in craft and lower-technician education prior to 1969 and, as one would expert, expertise developed. While the newer institutes are generally better equipped, and staff development has taken place, and the curricula have been improved, the libraries are inadequate and more support-staff are needed. There are also now more better-educated students to select from, for admission to technical institute courses, especially at craft level, thus raising standards. Although students are probably not so diligent as they were ten or fifteen years ago this is, in some ways, a good thing as they now spend more time on extra-curricular activities and they are more questioning of the teachers. There are still few discipline problems, compared to the West, in spite of the fact that most part-time day students are compelled to attend a technical institute, in a few cases, against their will.

CHAPTER 7

CONCLUSIONS

So far this thesis provides an overall insight into the technical institutes, up to 31 August 1980, and, from the wide range of facts and evidence presented, it draws conclusions which are given at the end of each of the preceding six chapters. Leading on from there, this chapter sets out to draw logical conclusions from the thesis overall and to highlight various important aspects.

In many respects Hong Kong was fortunate in that in the late 1960s, when the first technical institute was established, only a limited number of craft and lower-technician courses were available at the Technical College. This gave the educationalists an almost blank sheet on which to plan the new technical institutes. Hong Kong was also able to learn from the experiences of other countries, although planning a system to meet its own specific needs has always been kept very much in mind.

There were, however, a number of difficulties that are frequently met when planning and developing technical education in an emerging country and many of these have already been enumerated in the preceding six chapters. For example, there was limited expertise in many areas of technical education in Hong Kong and some senior staff and teachers had to be recruited from overseas. These included principals of technical institutes, heads of departments and teachers in new disciplines, in which Hong Kong had had little previous experience, such as printing and hotel keeping and tourism. Another difficulty was that most of the major items of equipment were ordered from abroad, largely from Britain, 8,000 miles away by sea, and delivery was often delayed owing to strikes and similar factors. This meant that ordering had to be undertaken well in advance.

In addition, prior to the technical institutes being established, most of the technical education had been at technician level and had been conducted in English. With

the introduction of craft courses on a large scale, in the technical institutes, it was soon found that the students could not cope with their studies if taught in English.[1] The teaching of such courses in the medium of Chinese, brought a number of problems. For example, few suitable textbooks existed and there is still a shortage in many fields. In addition, a limited amount had been done in translating technical terms into Chinese and the technical institutes and other bodies had to set about providing glossaries.[2]

The pressures exerted by Hong Kong's burgeoning population on virtually every facet of the Territory's social and economic development speak for themselves. The pressures have been, and, owing to the unacceptably high rate of illegal immigration, still are, enormous. In 1969 the population was 3,863,900, and, by the end of June 1980, on a land area of 1,061 square kilometres, Hong Kong had to support a total of 5,067,900 people. With built-up districts occupying less than 16 per cent of the total land area the population density in the metropolitan districts in 1976 was more than 25,000 per square kilometre.[3]

During the 1960s and the 1970s the education system, no less than social services generally, were under continuous strain from the sheer weight of numbers of people it had to serve and, perhaps more significantly, from those whom it could not serve as fully as it would have wished. If it had not been for the problems of illegal immigration there is little doubt the prospects for social development, including education, would have been bright. However, it may be concluded that, during the 1960s and the 1970s, both the economic and social development has been little short of

---

1. D.D. Waters, Design of Courses of English for Specific Purposes, talk at seminar (21 June 1980), p.3.
2. Manual of Technical Terms for use in Technical Institutes, Education Department, vols I and II (January 1975 and March 1977); and Manual of Technical and Industrial Training Terms Industrial Training Advisory Committee (November 1971); and Industrial Training Terms, English - Chinese, Hong Kong Productivity Centre (1968).
3. Hong Kong 1981, A Review of 1980, Chapter 19.

remarkable and, in the words of the Governor, was "... probably the fastest and most extensive growth that has ever been achieved in the world without external aid".[1]

These studies have shown that since the first technical institute was established, in September 1969, a concerted effort has been made by the Hong Kong Government for the development of technical education at craft and technician levels. After September 1969, the technical education system developed from one technical institute, with 217 full-time, 41 part-time day release and 6,984 evening only students, to five technical institutes, with 2,978 full-time, 7,920 part-time day and 12,811 evening only students during the 1979/80 academic year (see Table 3). Moreover, the scope of the work also changed from a ratio of 15 technician to 85 craft students, in 1970/71, to a ratio of 36 to 64 in 1979/80 (see Table 20).

During the 11 year period under review, the fact that the last four technical institutes could be constructed on the same semi-standard plan that had been used for the first technical institute at Morrison Hill (although floor-areas in some of the teaching spaces were increased in the later institutes to allow more space for each student), says a great deal for the original planning. Also, the fact that a semi-standard plan was used with, in the main, similar accommodation being provided (except when different trades were involved in, for example, workshops) from one institute to another did much to simplify and speed up the design process.[2]

In the past, slow controlled growth in the development of technical education has been regarded by some as the best guarantee of standards.[3] However, in the case of the technical institutes a 456 per cent expansion took place in full-time equivalent student numbers (one full-time student =

---

1. Sir Murray MacLehose, speech at 20th Anniversary Dinner, Hong Kong Management Association, (20 November 1980), The Hong Kong Manager, vol. 17, no. 1, January 1931 issue, p.8.
2. D.D. Waters, A Series of Papers ... Paper Three - Buildings, op. cit. (November 1972), p.1.
3. W. Davey, Problems of Expansion or Growth 1960 to 1967, Association of Technical Institutions seminar 14 to 16 June 1967 (England, June 1967), p.3.

three part-time day = six evening only students[1]) during the eleven year period from 1969/70 to 1979/80 (see Table 3). During this, "... decade of explosive growth in technical education ...",[2] Chapter 6 has shown that standards were maintained at a generally acceptable level.

Probably the most important resource in order to maintain (or to improve) the quality of education in an educational institution is the teaching staff. During the 11 year period from 1969/70 to 1979/80, the number of full-time teaching staff increased by 1,368 per cent, from 25 to 367 (see Table 12). There is no doubt that the rapid, planned growth of the technical institutes, an entirely new type of educational institution for Hong Kong, did provide a spirit of adventure and change. It would also appear that good staff and students are often attracted, not only by change itself, but also by the opportunities and rewards that change may bring to them personally. For staff, these may be financial, enhanced status or greater job-satisfaction. It would also appear to be the substantial general impression that if staff can be placed in an atmosphere of stress, struggle, growth and change that many of them will "grow with the job" and that some outstanding personalities will develop, a number of others will fall by the wayside.

Another important factor that has contributed to the quality of education is the status of the technical institutes. Because they have now made a name for themselves they are attracting better and more qualified applicants than before. For example, in the summer of 1971 there were 21,400 qualified and unqualified applicants for first-year places on all types of courses. By the summer of 1979, the number of qualified applicants had risen to 62,106 (see Tables 28 and 29),[3] although some applicants would have applied for a place in a number of different educational institutions,

---

1. (35)ED(TE)112/1/2 (August 1980).
2. Phillip Bruce, Technical Education Reaches the Peak in Hong Kong, Education and Training, vol. 23, no. 1 (England, January 1981), pp.6 and 10.
3. (40)ED(TE)114/2 (May 1980).

including the Polytechnic, and only going to a technical institute as a last resort.

While it has been shown that quality can be maintained even when there is rapid growth, there must obviously be limitations. H. Cameron, the Principal of the Lee Wai Lee Technical Institute, said that,

> ... the rate of expansion (in technical institutes) is probably the maximum that could have been achieved while maintaining standards.[1]

A subtle balance must, however, always exist between quality and quantity. For example, as we saw in Chapter 2, it was decided early in the life of the technical institutes to keep the nominal class size at 40 students. If it had been decided to reduce class size to say 32 students, then the rate of development would, no doubt, have been slower (because of costs and difficulty in recruiting additional staff in certain areas), although standards would probably have gone up, although there is no guarantee of this.

The output of students from the technical institutes has been planned largely on the demands of industry.[2] Thus, as we have seen, whereas a total of 62,106 prospective students applied for first year places in technical institutes on all types of courses in 1979, a total of 18,140 places (see Table 7) was considered to be sufficient to meet industrial demand. In turn, the 1977 Green Paper stated that a sixth technical institute would be built provided that industry showed its support for the five existing institutes.[3] Although the needs of industry have, to a large extent, been satisfied, it has meant that many qualified applicants for full-time and evening only courses have had to be turned away because there were insufficient places and,

---

1. H. Cameron, LWLTI/1/1 (23 June 1980).
2. D.D. Waters, A Series of Papers ... Paper One - General, op. cit. (September 1972), p.7, para. 8.1.
3. Senior Secondary and Tertiary Education ... op. cit. (November 1977), pp.12 and 13, para. 4.6.

as H. Cameron, the Principal of Lee Wai Lee Technical Institute, said, one failure of the technical institutes, "As far as the ... would-be students are concerned (is that they) ... have to reject far too many applicants ...".[1] There has always been a fear that to educate too many young people for too few jobs would lead to social unrest and unemployment.[2] It could be argued however, that to deny a large number of young people education when they have the ability and the desire for further advancement, is not wise. Some advocate that the training Council surveys are too conservative and that many more technicians and craftsmen could be educated and trained in Hong Kong and it would still be possible for them to find employment.[3] This is probably correct.

It should perhaps be reiterated that, while a useful start has been made, a great deal more useful information could be obtained by conducting more longitudinal tracer studies of past institute students through successive years of their working lives. In this way one can see whether the education that a student received, in a technical institute, was directly or indirectly related to his employment or whether he was forced, because of economic circumstances or other factors, to look for work elsewhere. More monitoring of "student and worker flow" is necessary to trace trends over time and to see what implications they will have for policy and future planning. With information like this, one is also better able to forecast and to plan because one understands more about wastage-rates and the kind of student that industry needs. One can also identify better which

---

1. LWLTI/1/1 (23 June 1980).
2. K.W.J. Topley, Director of Education, address Shue Yan College, 2nd and 3rd Joint Graduation Ceremony (13 November 1977), p.4, para. 2; and CR 30/581/78[II] (23 January 1980).
3. Keith Legg, Technical Education in an Industrializing Society, Technical Education and Industry, Report of a Commonwealth Regional Seminar/Workshop in Hong Kong, 28 September - 7 October 1976, p.57.

categories of courses and manpower sectors need specialised education and training and which courses need to be broader (or narrower) based.[1]

Turning next to the disciplines covered and the courses run in the technical institutes; we have seen that the number of different types of departments grew from six in the Morrison Hill Technical Institute in the early 1970s (including technical-teacher training which was transferred to the Technical Teachers College in 1974), to 12 in the five technical institutes in 1979/80. Some of these departments cover a number of different disciplines. Industrial Technology at Lee Wai Lee, for example, includes footwear, optics and clock and watch repairs. To give further evidence as to the increase in range of studies; in 1969/70 the Morrison Hill Technical Institute ran 43 different courses and by 1979/80 the number, excluding short courses, had increased to 194 (see Table 19).

Most of the newly established departments have been located correctly. The printing department would probably have been better if it had been at Morrison Hill, instead of at Kwun Tong, as it would then have been nearer to the heart of the industry.[2] However, when interest was first generated in technical education by the printing industry, the Morrison Hill Institute was already established and no spare space was available to add the extra department. In spite of this, the printing department functions reasonably well in its present setting, at Kwun Tong, largely because Hong Kong is small.

It would also have probably been better if only one clothing department had been set up, rather than one at Kwun Tong and one at Kwai Chung, although two were recommended by the Working Party which consulted industry.[3] One

---

1. P.R.C. Williams, Manpower Forecasting as a Basis for Educational Planning in Hong Kong, Paper I (14 March 1978).
2. Discussion with staff of Printing Department, Kwun Tong Technical Institute.
3. (4)ED(TE)2/6714/69 (19 January 1971); and 22nd meeting of Committee on Technical Institutes, Industrial Training Advisory Committee (29 November 1972), p.2, minute 116.2.

department would have been capable of handling all the students and, in many ways, would have been more flexible and versatile than two small departments. During the 1979/80 academic year these two departments comprised 13 posts, including the two head of department posts.[1] There is no doubt that this sector of technical education has not expanded as rapidly as was originally envisaged. It is, of course, mainly an operative-based industry rather than craft based, and, as has been mentioned before, the technical institutes do not generally run courses for operatives. Also, probably some of the lower-level clothing and textile courses, which are at present run by the Polytechnic, should already have been transferred to the technical institutes but there appears to be some reluctance, on the part of the Polytechnic, to do this as it would reduce student numbers.[2]

It must, of course, be accepted that in a dynamic and free economy like Hong Kong one can never expect industry to stand still and, when corresponding changes are necessary in technical education in order to keep in step, then these should be effected as far as is practicable. Flexibility is going to be more important in the future with increased emphasis on diversification and greater sophistication within industry.

While English, mathematics and science are included in the curricula of many basic courses, these are mainly taught with some technical bias and as "tools of trade". In the same way, while General and Pre-General courses have been run, which provide general education with some technical bias, their main purpose is to raise the educational standards of students so that they may later enter a craft or a technician course. There is no doubt, however, that while such departments and disciplines as design, child-care and hotel-keeping and tourism have been added in recent

---

1. Education Department establishment records.
2. Education Department and Polytechnic 30th Liaison Committee Meeting (29 May 1979), p.3 of minutes.

years, the field of studies in technical institutes do not match the richness and variety that one finds in a large college of further education in Britain.[1] There one can expect to find a variety of courses in such areas as social studies, languages, para-medical subjects, biological sciences, art, and a wide variety of General Certificate of Education and some Certificate of Secondary Education subjects.

There is no doubt that one or two departments of this nature can have a liberalising effect on a technical institute and, for this reason, Principal Devereux once said that he wished he had a department of social studies or design at Kwun Tong.[2] Such departments, together with some general education, may possibly be introduced in time, when more technical institutes have been established, although there is no evidence of this at this stage. It must be remembered however, that resources in technical institutes in the 1970s, especially in the early years, were in short supply and it is felt that the correct decision was made when it was decided that courses should be industrially oriented. Hong Kong had a burgeoning population and it was essential that people were educated and trained to earn their livings.

At this stage, it would appear apposite to examine whether the technical institutes have been well supported by industry. We have already seen that students had little difficulty in finding employment on leaving a technical institute and, in 1980, only 6.1 per cent of the full-time students were unemployed approximately three months after graduating.[3] However, as has already been pointed out, in a situation of relatively full-employment, the above figures carry limited weight.

Many industrialists spend a great deal of time sitting

---

1. G.A. Hunting, Report on a Visit to Hong Kong (Part B) (5 to 20 September 1975), para. 15.
2. J.R. Devereux, Future Role of Technical Institutes (20 October 1976), p.7, para. 7.1.
3. Employment Survey of Full-time Graduates of Technical Institutes (1979/80) (January 1981), p.2.

on the Hong Kong Training Council and its allied committees and training boards, and the Training Council advises the Director of Education on the running of the technical institutes. In addition, as we have already seen, some industrialists have been extremely generous and two prominent members of society have each donated five million dollars and, as a result, the Haking Wong and the Lee Wai Lee Technical Institutes are named after them. A number of other industrialists have also given equipment. In addition, the Morrison Hill Technical Institute was entirely built and equipped by a seven million dollar donation from the Royal Hong Kong Jockey Club, and the British Government donated £100,000 worth of equipment to each of the first four technical institutes. The actual total capital cost of building and equipping the five technical institutes was $101 million and donations amounted to $22 million or approximately 22 per cent of the total cost.[1] In addition, the number and value of scholarships and prizes donated to the five technical institutes, during the 1979/80 academic year, amounted to 316 and $171,628 respectively.[2] It is apparent that the technical institutes have generally been well supported, financially, by industry. The main reasons for the benevolence are probably the low-tax structure and the fact that many Chinese believe that doing good to others will ensure blessings, not only in this life, but also in the life hereafter. As at 1980, profits tax was charged on unincorporated business at 15 per cent and on corporations at 17 per cent.[3] This means that less profit is taken in taxes than in most other countries and a businessman can more easily afford to make donations to deserving causes.

It could be argued, with the benefit of hindsight, that the development of technical institutes should have started earlier. Also, that the additional floors and annexes, for example the extra floor that was completed at Morrison Hill in 1974, and the other extensions which are planned for the other four institutes, should have been constructed when the institutes themselves were built. Not

---

1. Minute 19ED(TE)6692/111/1 (3 September 1980).
2. (80)ED(TE)133/1 (22 May 1980).
3. Hong Kong 1981, A Review of 1980, p.41.

only would they have been cheaper then, in real terms (as an addition to an existing structure, especially when working at a height and in a confined space, is always more expensive), but also because inconvenience is caused in the running of an institute on a small campus when work is in progress. So often we have seen, not only in Hong Kong but also elsewhere, that educational buildings were too small before they were completed.[1]

One could argue that, while no government has a bottomless purse - and Hong Kong is no exception - it has shown large financial surpluses for every year in the past two decades, with the exception of 1965/66 and 1974/75, when there were deficits of $137 million and $380 million respectively, and, on March 31, 1980, accumulated reserves stood at $9,339 million.[2] As another typical example, the surplus for 1979/80 was $2,923,800,000. It would appear therefore that the Government was not short of funds although, to be fair, it must be appreciated that, in a rapidly expanding economy like Hong Kong, there are numerous competing claims for finance and no Government Finance Branch is able to satisfy every department. Public needs must always be the overriding factor.

While, with the benefit of hindsight, it would probably have been better if the implementation of the technical institute programme had started earlier, one must understand that the Government wanted to make absolutely sure that full support would be forthcoming from industry and the public.[3] It was also almost impossible to forecast that Hong Kong's population and economy would develop at the rate they have and it would have been difficult to speed up the technical institute development programme still further without a lowering of standards. While buildings could have been erected and equipped, the main difficulty would have been

---

1. W. Davey, Problems of Expansion or Growth 1960 to 1967, Association of Technical Institutions (14 to 16 June 1967), p.7.
2. Hong Kong 1981, A Review of 1980, p.38.
3. Sir David Trench, Governor, Colony gets its first technical institute, South China Morning Post (13 October 1970).

in finding qualified and suitable staff.

A great deal has been said in the past about the governance of the technical institutes. Bearing in mind that, especially in the late 1960s and first half of the 1970s, there was limited expertise in technical education in Hong Kong, the decision that they should be run by Government was probably correct. It is very powerful and has been able to provide the technical institutes with massive support. However, now that the technical institutes are well established it is apposite to decide what form of governance will suit the institutes best in the years ahead. This is likely to be some form of autonomy which will give them greater mobility and flexibility and will place the staff outside the civil service.

The future

As we have seen in Chapter 1, the economy has developed and changed out of all recognition over the past three decades and, since 1969, the technical institutes have made a significant contribution to that development. Until the beginning of the 1950s, Hong Kong was mainly an entrepôt but this changed to a dependence on manufacturing and the 1970s saw the emergence of service industries.[1] The pace of change has been rapid for, as Lǎo zǐ wrote in, "The Way of Virtue" almost 2,500 years ago, "Whosoever adapteth himself shall be preserved to the end".

Industry will continue to change rapidly in the 1980s and will diversify and become more sophisticated.[2] This will be influenced by the emergence of the People's Republic of China - with its programme of "Four Modernisations" - into an industrial power, as Hong Kong is situated in a strategic

---

1. Sir Philip Haddon-Cave, Financial Secretary Hong Kong, The Changing Structure of the Hong Kong Economy, paper read to the XXII Association Cambiste Internationale Congress in Singapore (6 June 1980), p.30, para. (79).
2. Hong Kong 1990, The Bulletin, magazine of the Hong Kong General Chamber of Commerce (September 1977), passim; and D.D. Waters, Initial Thoughts on Diversification and the Upgrading of Industry in Hong Kong (23 August 1978), passim, ED(TE)169/78; and J.R. Devereux, Diversification and the Future of the Light Manufacturing Industry (18 August 1978), passim, ED(RB)692/78; and Keith Legg, Some Initial Thoughts on Diversification (February 1978), passim.

position and will benefit considerably from trade and joint ventures with China.

As industry becomes more sophisticated it will be more difficult for employees to learn entirely on-the-job and the theory and related practical work, as taught in technical institutes, will become more important. The need for rapid manpower development has already been emphasised and, in 1979, the Diversification Committee recommended that, in order to ensure that an adequately educated and trained labour-force is available at any time, it is worth risking an over-provision of places for education (in technical institutes) and training, even given that resources are limited.[1] While not all agree with an over-provision of places, there would appear to be little doubt that many more places and more technical institutes will be required in the future.[2]

With the expected rapid rate of development, educational planning will need to consider "planning for change" so that the technical institutes can adjust rapidly, not only to predictable change, which is endemic to all educational institutions, but also to unexpected circumstances.

While the finance and the resources that were required in the 1970s were significant, considerably more will be required as technical education develops in the 1980s. Funds will be required not only for new institutes and for extensions to existing buildings but also, as industry becomes more sophisticated, for better equipment. However, it is easy to reach a point of diminishing returns and a careful balance will need to be struck if cost-effectiveness is to be kept at an acceptable level. However, while many such developments will be expensive, they will need to be allowed to go ahead as necessary accompaniments of overall economic and social

---

1. Report of the Advisory Committee on Diversification 1979 (30 November 1979), p.217, para. 355.
2. CR30/581/78[II] (23 January 1980), p.1; and D.D. Waters, Technical Institutes in the 1980s (January 1980), passim.

progress. Fortunately, the increasing importance of technical education appears to be fully understood by the Government and, as the Financial Secretary, Sir Philip Haddon-Cave, said, in 1980;

> It (the economy) will need to be stimulated by an even greater stress on technical education, an area in which I would hope to see a greater involvement of public funds.[1]

Ideally, after the period of rapid expansion in the 1970s, the technical institutes need a period for consolidation and to become more firmly established but, with extensions and new institutes now being planned it would not appear that they are going to get it.[2] This expansion programme will depend upon adequate funds being provided and suitable staff being recruited. It will also depend upon the Government Public Works Department completing the new buildings on time. As has been shown in this thesis, a rapid rate of growth can be achieved without any significant drop in the quality of education.

Coupled with this proposed expansion, it will be necessary to decide what the future role of the technical institutes is to be. In other words, will they be required to carry on with their present task, which is mainly providing technical education for craft and technician students, or will they be required to do something significantly different?[3] The view has already been expressed that, with a limited number of institutes, it is not desirable to embark on

---

1. Sir Philip Haddon-Cave, The 1980 - 81 Budget : Speech by the Financial Secretary, Moving the Second Reading of the Appropriation Bill (27 February 1980), pp.148 and 149.
2. H. Cameron, Principal, Lee Wai Lee Technical Institute (1 September 1978), (36)ED(TE)112/2/3.
3. D.D. Waters, What Should the Future Role of the Technical Institutes Be? (11 August 1978), passim.

providing general or non-vocational education, although it is probable that the institutes will need to run some Higher Diploma courses, especially in areas not covered by the Polytechnic.[1] Care must be taken, however, to avoid running too many courses at the higher level as this is the role of the Polytechnic. It is also important that any changes that are made are based on a realistic assessment of industrial needs. Bearing these facts in mind it is doubtful if the main aims and objectives of the technical institutes will change over the next half decade or so.

While a great deal has been done in the past, there will also be a need to define more clearly the desirable community involvement of the technical institutes in the future and how they can relate better to other institutions, organisations and agencies, including employers' organisations, educational institutions and the general public. Institutes must continue to project an inspiring image to industry, students, parents and the Government alike, as improving the ethos and reputation of the institutes is a never-ending process. It is, after all, vital to Hong Kong's interest to eliminate any vestige of the out-moded attitude that involvement in industry, at any level other than at the highest, implies social inferiority.[2]

As the expansion programme continues and as more technician and possibly higher technician courses are introduced, the technical institutes will need to acquire new and better equipment and resources, such as better students' union accommodation as well as better qualified teaching staff and support staff. They will also be called upon to develop new courses and teaching techniques and to enrol different and better educated students. There will also be a need for increased flexibility, in line with the

---

1. D.D. Waters, Technical Institutes in the 1980s (5 January 1980), Appendix A, p.2, item 17.
2. Working Party Report on Senior Secondary and Tertiary Education (7 May 1977), pp.46 and 47.

recommendations of the Advisory Committee on Diversification in 1979, so that the technical institutes can participate in new areas and can improve the old.[1]

Future research

It is necessary to admit that we do not know as much as we would like on the subject of technical education in the developing world. For the preparation of parts of this thesis suitable independent literature, including surveys from emerging countries, has been in short supply. Also, in the case of Hong Kong, it has been necessary to rely largely on surveys conducted by the Government or Government sponsored organisations.

Moreover, these studies have highlighted a number of areas which could usefully be subjects for further research. For example, it is hoped that similar studies of technical institutes or colleges in other emerging countries will be conducted so that comparisons can be made. It would also be useful to explore more fully a wide variety of subjects which have, of necessity, only been briefly covered in this thesis. For example, a history of technical education in Hong Kong, detailed methods used for the educational planning of the technical institutes, and the planning of technical institute buildings are all worthy of further study. Other important matters include cost-effectiveness, staffing and staff-development, and action-research on a sample of institute students followed by a longitudinal tracer study into their careers.

Conclusions

Much of what has been written in this thesis tramples over well trodden ground and confirms what many people who are (or were) directly concerned with technical education in Hong Kong already know. In other words, it has highlighted little that is new but it is rather a confirmation and documentation of development of the technical institutes.

---

1. Report of the Advisory Committee on Diversification 1979 (30 November 1979), p.233, para. 386.

In spite of this, it would appear that the research has been worthwhile in that this is the first time such information is available in one volume.

This thesis has attempted to provide an overall insight into the technical institutes in Hong Kong and covers their planning and development from the mid 1960s to 31 August 1980. It does not claim to be a final statement. The repeated theme throughout is that substantial beginnings have been made in the development of the technical institutes and, while the growth in student numbers has been rapid, the quality of the education provided has been of a satisfactory standard and indeed has risen during the 1970s. It is hoped that this study of the institutes, in the first decade of their existence, will help to establish an outline for the next stage of development. It may also assist other emerging countries which are following in Hong Kong's footsteps.

CHAPTER 8

POSTSCRIPT

This study is, strictly, only concerned with the development of the technical institutes up to August 31, 1980. However, between that date and February 1982, when this thesis was edited, a number of important developments took place which are related to various topics covered in this study.

Firstly, as one would expect, the technical institutes have continued to develop apace in student numbers and, in October 1981, there were 3,516 full-time, 10,096 part-time day and 16,651 evening only students on roll, making a total of 30,263.[1] As can be seen from Table 3 on page 51, the above figures represent 18, 27 and 30 per cent increases, respectively, over the October 1979 figures, with an increase in total student numbers, excluding short courses, of 28 per cent over the two-year period. With a waterfront annex for the Marine and Fabrication Department of the Haking Wong Institute due to be completed in the Spring of 1982, an annex and an additional floor for Lee Wai Lee in 1983, and a new technical institute at Tuen Mun in 1985 (which has been delayed by one year because of extra site formation work), together with other floors and annexes at other institutes in the first half of the 1980s, there seems little doubt that this rapid increase in enrolments will continue.

"The Topley Committee"

Because of the need to take a close, overall look at the future development of further and higher education, on the instructions of the Governor-in-Council, a committee was set up in November 1980, consisting of 15 eminent industrialists, educationalists and civil servants, to review post-secondary and technical education.[2] The Committee was headed by K.W.J. Topley, the past Director of Education, in a full-time capacity,

---

1. Education Department enrolment statistics.
2. South China Morning Post, editorial (20 November 1980), p.2; and ED.RB.746/80.

who had been permanently replaced as Director by his previous Deputy Colvyn Haye. While the Committee's report was finalised in the summer of 1981 and submitted to the Governor, at the time this Chapter was edited (February 1982), the contents of the report were still confidential.

Shortly after the report was completed, in September 1981, K.W.J. Topley became the Secretary of Education, while Colvyn Haye remained as Director of Education. When asked how he defined the two posts, Topley said he likened that of the Director of Education to a general manager and his own post of Secretary to that of managing director. The creation of the new post of Secretary is a good sign in that it shows the increased emphasis that is being placed on education as a whole by the Government.

Overall review of education

Another important development that has taken place was a two-week visitation by four representatives of the Organisation for Economic Co-operation and Development (OECD), in October 1981. The team was led by the British educationalist Sir John Llewellyn, the former Vice-Chancellor of Exeter University and Director-General of the British Council.[1] The other members are Dr. Karl Roeloffs, Head of the Planning Division of the Federal German Ministry of Education and Vice-Chairman of the OECD, Professor Michael Kirst, Professor of Education, Stanford University, California, and Dr. Greg Hancock, a Chief Education Officer from Australia. The team is due to return to Hong Kong for a second visit, in March 1982, and their report should be completed in the summer of the same year. Their brief is to consider the coherence and effectiveness of the Hong Kong Education system at all levels, to identify future aims and areas which may require strenthening, and to make recommendations having regard to approved policy.

The Visitation was generally welcomed by the public but some felt that, with the diversity of education in Hong Kong

---

1. Halima Guterres, Who's Who on Schools' Review Team, South China Morning Post (21 October 1981); and ED(RB)12/259/78 pt.5.

and with the historical, cultural and language background, in a unique encapsulated environment probably found nowhere else in the world, the team would have to ask searching questions if it was to provide anything useful in such a short space of time.[1] There is no doubt, however, that the members of the team are well qualified and are able to bring a wide range of experience to bear, and their views should provide a valuable second opinion, to that of local educationalists, as a result of which the Government should be able to formulate new educational policy. Looked at in this light, the visitation by OECD members must be construed as valuable.

It is probable that the "Topley Report" will be kept confidential until the OECD report has been submitted in case of embarrassing differences of opinion between the two reports.[2]

The Vocational Training Council

Another important development is the creation of a new statutory body titled the "Vocational Training Council" (see page 7) to replace the Hong Kong Training Council, as recommended by both the Training Council itself and the Advisory Committee on Diversification.[3] The Bill for the new Council had its third and final reading in the Legislative Council on 10 February 1982 and it is expected that the new body will be established early in 1982.[4]

The new Council will have wide-ranging powers in addition to advising the Governor on manpower needs and

---

1. Joyce Symons, Headmistress Diocesan Girls School, speechday address, Hong Kong Education May Help China in Future, South China Morning Post (8 November 1981); and A Need to Stimulate our Government, editorial, South China Morning Post (29 October 1981) p.2.
2. Experts Views Cause Delay, Hong Kong Standard (6 January 1982).
3. Report of the Advisory Committee on Diversification 1979, op. cit. pp.244 and 245; and New Board Planned to Oversee Jobs Training, South China Morning Post (28 August 1981); and Governor Sir Murray MacLehose, address, opening session Legislative Council (7 October 1981) p.27, paras 74 and 75; and ED(TE)3/3307/57.
4. (28)ED(TE)3/3307/57.

measures required to ensure comprehensive schemes of technical education and industrial training.[1] Unlike its predecessor, the Training Council, which was purely advisory, it will have statutory powers to establish, operate and maintain technical institutes and industrial training centres and to institute, develop and operate training schemes for operatives, craftsmen, technicians and technologists. It will also have the power to employ staff and to engage technical and professional advisers and to engage in research.

The new Council, backed up by various committees and industrial boards, will not exceed four Government servants and 18 non-public officers, and the Chairman will be appointed from the latter group. This membership brings the new Council very much under the influence of the private industrial sector.

In this regard it is expected that at least five new industrial training centres, in addition to the technical institutes and the existing Construction Industry Training Centre and the Clothing Industry Training Centre, will be established and managed by the new statutory board. It is expected that such fields as plastics, electronics, basic engineering, textiles and hotels will be covered by the new training centres, which should commence operations from 1984 onwards. There is also a second training centre planned for the construction industry, which will open in the summer of 1982, and the probability of three more centres, one for printing another for automobile engineering and a third for welding are being studied.

The setting up of a new Vocational Training Council, and additional training centres, with more clout than the existing Training Council, must be welcomed and should contribute significantly to a better trained workforce.[2] The establishment of more training centres will have repercussions

---

1. Legal Supplement No. 3, Hong Kong Government Gazette (24 December 1981), Sup. to Gazette No. 52, volume CXXIII, passim; and New Body to Mastermind Training Gets Green Light, South China Morning Post (24 December 1981), p.9; and new council planned to oversee technical training, Hong Kong Standard (24 December 1981).
2. The Hong Kong Manager, vol. 18. no. 2 (February 1982), editorial.

on the technical institutes in that trainees undergoing full-time periods of training in the new centres will, no doubt, as in the existing centres, be expected to attend day release classes at a technical institute. It is also possible that some of the border-line work between "technical education" on the one hand and "training" on the other may be transferred from a technical institute to new training centres, possibly in the field of hotel training, for example.

Financing of industrial training

Another important development that has taken place, in line with the recommendations of the 1979 Diversification Committee Report, is that the Governor in Council has accepted that the Government should finance industrial training (for example, that conducted in off-the-job training centres) as a charge on general revenue with certain provisos.[1] The most important of these is that it will be in the form of a block-grant to the new Vocational Training Council. The intention is to achieve maximum flexibility and it is understood that commitments will be accepted by the Government to allow the Council to plan ahead, although to what extent this will be possible and whether sufficient funds will be forthcoming, at the time they are required, remains to be seen.

It is interesting to observe that the two existing centres, one managed by the Construction Industry Training Authority and the other by the Clothing Industry, Training Authority, were each given the choice of either continuing to operate, as now, on their existing industrial levy schemes (see pages 24 and 25) or being financed from general revenue through the new Council. Significantly, they both chose to retain the present levy scheme because they believe, if they are financed from general revenue, some degree of flexibility will be lost and funds may be insufficient. Only time will tell if their fears were groundless.

---

1. (43)[1] ED(RB)692/78 Pt.3.

It is provisionally estimated that, in 1982/83, funds for the Vocational Training Council of the order of $75 million and $139 million will be required for recurrent and capital subventions respectively.[1]

The Technical Education and Industrial Training Department

As a result of a recommendation made by the Advisory Committee on Diversification, in 1979,[2] as to whether greater flexibility of response to the needs of industry could be achieved if the technical institutes were moved from the Education Department, a new Government department has been announced. This is to be called the "Technical Education and Industrial Training Department" and its Director will, like the Director of Education, work to the Secretary of Education. This new department will be formed by merging the Technical Education Division of the Education Department and the Industrial Training Branch of the Labour Department. It is expected to come into being on 1 April 1982.[3] This new Department will constitute the executive arm of the new statutory Vocational Training Council and the Director of the new Department will be the chief executive of the Council. At present the Training Council is serviced by the Training Council Division of the Department of Labour but, in the future, the Vocational Training Council will be serviced by the Department of Technical Education and Industrial Training.

The establishing of a new department seems to have been generally well received by the Chinese media but the South China Morning Post English language newspaper queried whether a Government department, possibly headed by an Administrative Officer rather than by a professional, was what was needed.[4] The question of governance of the technical institutes has

---

1. Legal Supplement No. 3, op. cit. p.C605.
2. Report of the Advisory Committee on Diversification 1979, op. cit. p.233, para. 386.
3. (28)ED(TE)3/3307/57.
4. Industrial Training Needs New Impetus, South China Morning Post (5 January 1982), editorial, p.5; and New Council Should Improve Training Methods, South China Morning Post (11 February 1982); and A New Driving Spirit Needed, South China Morning Post (18 February 1982), editorial.

already been dealt with in Chapter 5. There are advantages in having a separate department of technical education and industrial training, rather than technical education being situated in a Government department where the emphasis is on general education, in that it is seen to be given more "face" and the new Department can specialise. There are, however, drawbacks, as has already been pointed out in Chapter 5. These include the fact that although it is understood attempts will be made to streamline the administrative system in order to give the Director more authority and a greater degree of autonomy, when running his department, than has been the case in the Education Department, it remains to be seen to what degree this will be possible within the inevitable bureaucratic system of government.[1] Although there are objections in that technical institute staff are not keen to leave Government service, as stated in Chapter 5, it would probably have been better, as happened in Singapore, if technical education and industrial training had been dis-established by forming an autonomous department outside the Government.

---

1. S.L. Chen and Alex Wu, speaking on Vocational Training Council Bill 1982 in Legislative Council (10 February 1982).

Definitions of the Main Levels of Technical Personnel[1] Appendix 1A

1. Craftsman - A skilled worker in a particular occupation, trade or craft, is able to apply a wide range of skills and a high degree of knowledge to basically non-repetitive work with a minimum of direction and supervision. He requires practical training (usually under apprenticeship), which is normally combined with an appropriate course of technical education.

2. Technician - Technicians and other technical supporting staff occupy a position between that of the qualified scientist, engineer or technologist on the one hand, and the skilled foreman, or craftsman, or operator on the other. Their education and specialised skills enable them to exercise technical judgement. By this is meant an understanding, by reference to general principles, of the reasons for and the purposes of their work, rather than a reliance solely on established practices or accumulated skills. In non-technical sectors the technician is one who has acquired detailed knowledge and skills in one specialist field; or knowledge and skill, to a lesser degree, in more than one specialist field; is required to exercise judgement, in the sense of both diagnosis and appraisal, and initiative in his work; is frequently called upon to supervise the work of others; and has an appreciation of the environment beyond the immediate limits of his duties.

3. Technologist - A technologist has studied the fundamental principles of his chosen technology and should be able to use his knowledge and experience to initiate practical developments. He is expected to accept a high degree of responsibility and, in many cases, to push forward the boundaries of knowledge in his particular field. A technologist has the qualifications and experience equivalent to those required for membership of a professional institution.

Definitions of the Main Levels of Technical Personnel[2] Appendix 1B

1. Operative - Operative training, sometimes known as "learnership", makes minimal demands on formal education and although literacy is usually considered preferable in developing countries it is not essential, except in the more sophisticated industries. The period of training rarely exceeds six months and is normally on-the-job. Usually no institutional training is required. Typical posts include production or process workers in electronics, plastics and wig factories and similar posts in other industries.

2. Labourer/General Worker - For labourers and general workers little or no training is required, and literacy, while preferable in a developing country, is not essential.

---

1. Extracted from Second Annual Report of the Hong Kong Training Council, April 1975 to March 1976.

2. ITAC Paper No.5/66 (72)ED(TE)3149/65[I].

Appendix 2

Information about the Proposed Technical Institute at Morrison Hill

The needs for which the Morrison Hill Technical Institute is intended to provide are as follows[1] :

(a) To enable the existing pre-apprenticeship and other low level courses at the Technical College to be moved to the Technical Institute so that the facilities at the Technical College can be employed mainly for the training of technologists and high-level technicians.

(b) To offer additional accommodation for the training of technicians on a full-time basis.

(c) To offer additional accommodation for pre-apprenticeship training in various basic trades.

(d) To offer more part-time day release courses for training craft apprentices and technicians.

(e) To provide additional accommodation for the expansion of the Technical College Evening Department for training apprentices, craftsmen, supervisors and technicians on a part-time basis.

(f) To offer other full-time or part-time vocational and commercial courses to meet the needs of industry.

(g) To provide full-time, part-time and sandwich courses for the training of instructors in technical and vocational subjects for technical schools and for industry.

---

1. Extracted from Proposal of a Technical Institute (Revised) (September 1964)

Appendix 3

Specialisms in Technical Institutes as at March 1980

Departments	Technical Institute	Specialisms
Clothing	Kwai Chung	Clothing machine maintenance
	Kwun Tong	Pattern making Light clothing manufacture Sewing operator instructor
Commercial Studies	Lee Wai Lee	Business studies Trading practices Clerical studies Administrative studies
	Morrison Hill	Business studies Insurance studies Administrative studies
Construction	Haking Wong	Civil engineering Scaffolding Masonry
	Morrison Hill	Building studies Estate and property management Building services Site surveying
Design	Lee Wai Lee	Three-dimensional design Communication design Fashion design Interior design and display Jewellery design
Electrical	Haking Wong	Power engineering Lift and escalator studies Electrical fitting and installations
	Kwai Chung	Power engineering
	Kwun Tong	Electronic engineering Digital electronic studies Radio and television servicing
	Morrison Hill	Electronic engineering Radio and television servicing Sound equipment servicing
General Studies	Lee Wai Lee	Child care Pre-technical (textiles and clothing)
	Morrison Hill	Pre-technical (engineering)

Appendix 3 continued

Departments	Technical Institute	Specialisms
Hotel-keeping and Tourism Studies	Haking Wong	Catering Tourism Hotel reception Food and beverage studies
Industrial Technology	Lee Wai Lee	Industrial engineering Clock and watch repairs Footwear manufacture Optical studies Metal finishing
Marine and Fabrication	Haking Wong	Vehicle body repairs Shipbuilding and repairs Heavy-duty welding Foundrywork Marine plant fitting Yacht and boat building
Mechanical	Haking Wong	Instrumentation and plant maintenance
	Kwai Chung	Production engineering Tool and die making Plastic mould making
	Kwun Tong	Automobile engineering Air-conditioning and refrigeration Construction plant maintenance
	Lee Wai Lee	Mechanical engineering (manufacture technology) Automobile engineering Aeronautical mechanics Sheetmetal fabrication Tool and die making
	Morrison Hill	Automobile engineering Automation Air-conditioning and refrigeration
Printing	Kwun Tong	Letterpress and offset printing Print finishing Reprographic techniques Graphic reproduction
Textiles	Kwai Chung	Spinning and weaving Printing, dyeing and finishing Textile mechanics
	Kwun Tong	Knitting and knitwear technology Knitting plant maintenance

Reference : ED(TE) 110/1

Appendix 4

Brief Details of Technical Institutes as at 27 August 1980

	Morrison Hill	Kwai Chung	Kwun Tong	Haking Wong	Lee Wai Lee
Date of Opening	1969	1975	1975	1977	1979
Location	Oi Kwan Road Wanchai	Hing Shing Road, Kwai Chung	Hui Ming Street, Kwun Tong	702 Lai Chi Kok Road, Cheung Sha Wan	30 Renfrew Road, Kowloon Tong
Site area (sq.metres)	4,120	6,820	12,080	7,900	15,330
Student capacity	On average, each technical institute has the capacity to offer courses for a mix of : 960 full-time students, 2,800 part-time day release students, and 4,000 part-time evening students (with the help of outside centres)				
Types of courses offered	(a) By mode of study : Full-time Part-time day release Block-release Evenings only (b) By discipline : Clothing industries Commercial studies Construction Design Electrical engineering General studies Hotel-keeping and tourism studies Industrial technology Marine and fabrication Mechanical engineering Printing Textile industries (c) By level : (i) Technician courses in technical disciplines and post-Form five courses in commercial and service industry fields; academic entry requirements are completion of Form five with four or five passes in relevant subjects. (ii) Craft courses in technical disciplines and post-form three courses in commercial fields; academic entry requirements are completion of Form three.				
Details of admission of students	(a) Full-time courses : Applications are invited through newspaper advertisements in July. Selection of students is either by Hong Kong Certificate of Education examination results, or technical institute entrance examinations and/or interviews. (b) Part-time day release and block release courses : Applications are invited through newspaper advertisements in July. Students are sponsored by employers and some are recruited through the Industrial Training Division of the Government Labour Department. (c) Evening only courses : Applications are invited through newspaper advertisements in May. Students are selected by grading examination and/or interviews.				

Reference : ED(TE) 125/1

Survey of Teachers in Technical Institutes with Teacher Training Qualifications

Appendix 5

Discipline	With teacher-training qualifications*	Without teacher-training qualifications	Total	Percentage without teacher-training qualifications
Academic staff				
Mechanical and marine	32	26	58	45
Electrical	19	22	41	54
Building/civil	8	9	17	53
Commercial	15	9	24	37
Hotel and catering	4	0	4	0
Textile and clothing	12	7	19	37
Printing	2	4	6	67
English	6	0	6	0
Design	3	0	3	0
Maths and science	4	0	4	0
Miscellaneous	3	0	3	0
Assistant Masters/ Certificate Masters	14	0	14	0
Sub-total	122	77	199	39
Workshop Instructors	34	24	58	41
Total	156	101	257	39

Notes : 1. *Including those who are attending full-time or part-time day courses at the Technical Teachers College. For Workshop Instructors "teacher-training" means completion of workshop instructors course.

2. Academic staff includes graduate and non-graduate teachers.

3. Miscellaneous disciplines include footwear, watch-repairs and optics.

Reference : Minute 528 of 31st Meeting of Technical Institutes/Technical Teachers College Policy Committee (17 October 1978) ED(TE) 108/2/1.

BIBLIOGRAPHY

Unless otherwise stated, the following papers, articles, books and other literature were published or drafted in Hong Kong. Many of these documents are in files in the Education Department and their circulation is restricted.

Primary Sources

Advisory Committee on the Supply and Training of Teachers for Further Education (England, June 1975)

Apprenticeship, Industrial Training Advisory Committee, Paper No.2B/66

Bleasdale, C.H., Libraries and Resources Centre in the Technical Teachers College and Technical Institutes, Hong Kong, Commonwealth Secretariat (March 1977)

Bremridge, John, Legislative Council, Official Report of Proceedings (16 January 1980), p.320

Burton, Barry, L., Lina Lam and Lawrence W.H. Tam, Libraries in the Technical Institutes and the Technical Teachers College (April 1976)

Cameron, Hugh,

(1 September 1978), (36)ED(TE) 112/2/3

(23 June 1980), LWLTI/1/1

Technical Institutes/Polytechnic Levels of Work and Division of Courses (28 August 1976)

Capacity and Enrolment of Technician Courses/Programmes in Technical Institutes 1977/78, and Capacity and Enrolment of Craft Courses in Technical Institutes 1977/78

A Career in Industry Through Apprenticeship Training, Labour Department (undated)

Categorisation of Courses in the Technical Institutes and the Technical Teachers College (26 August 1980)

Census and Statistics Department records, various

Chai Wan Social Needs Study, A Report of a Survey Carried Out Among Organisations and Residents in the Chai Wan District of Hong Kong, Hong Kong Council of Social Service (September 1967)

Chen, S.L., Hong Kong Legislative Council, Official Report of Proceedings (6 July 1978), pp.1175 and 1176

Clark, J.R., Report on the Organisation of the Education Department and Procedural Considerations (October 1969)

Class Size in Technical Institutes, Technical Institutes/ Technical Teachers College Policy Meeting, paper for discussion (12 June 1980)

Clothing Industry Training Authority, annual reports

Comments by the Committee of Principals of Technical Schools on Sir William Houghton's Report (9 February 1972)

Comments by the Director of the Polytechnic and His Senior Staff on Paper, "The Future Role of Technical Institutes" (5 January 1977)

Comments of Apprentices on Craft and Pre-Craft Courses in Technical Institutes (14 July 1978)

Construction Industry Training Authority, annual reports

Departmental Comments on Important Issues and Major Recommendations in the Momm Report (27 March 1979)

The Development of Higher Education in Hong Kong, Report of the Working Group on Higher Education (February 1980)

The Development of Senior Secondary and Tertiary Education (October 1978)

Development Plan of Technical Institutes 1978-1983 (June 1978)

Devereux, J.R.

Diversification and the Future of the Light Manufacturing Industry (18 August 1978)

The Future Role of the Technical Institutes (20 October 1976)

The Quality of Technical Institute Education (24 August 1978)

Director of Education, 1977-78 Annual Summary

Education Department and Polytechnic Liaison Complex (27 April 1978), AS735/578

Education Department and Polytechnic 30th Liaison Committee Meeting (29 May 1979), Minutes

Education Department Annual Summaries and Reports

Education Department, Half-Yearly Statistical Summary

Education Department statistics and records, various

Education Ordinance 1971

Education Policy (April 1965)

Employment Surveys of Full-time Graduates of Technical Institutes from 1975 to 1980

Enrolment Report for the Technical Institutes, 1979/80 (9 January 1980)

Establishment Records, Education Department

The Final Report of the Industrial Training Advisory Committee (March 1971)

Foulds, David, A Study of Language Requirements in Technical and Commercial Establishments in Hong Kong (1979)

The Further Development of Rehabilitation Services in Hong Kong (October 1976)

Gailer, J.W. (John),

The Development of Technical Education and Training in Hong Kong (March 1967)

Visit to Hong Kong 13 to 16 June 1971 (16 August 1971)

Grant, Ian, Morrison Hill Technical Institute (17 July 1968)

Guide to Applicants, Technical Institute Courses (1977)

Haddon-Cave, Sir Philip,

The Changing Structure of the Hong Kong Economy, paper read to the XXII Association Cambiste Internationale Congress in Singapore (6 June 1980)

The 1980-81 Budget Speech by the Financial Secretary, Moving the Second Reading of the Appropriation Bill (27 February 1980)

Hammond, H.E., Report, Morrison Hill Technical Institute (August 1968)

Haye, Colvyn, Director of Education (note) (29 July 1981)

Henderson, J.N.,

Address, Opening of Experts Meeting on Apprenticeship, Sponsored by Asian and Pacific Skill Development Programme, International Labour Organisation (19 December 1980)

Apprenticeship (Amendment)Bill 1980, Legislative Council, Official Report of Proceedings (25 June 1980), pp. 914 and 915

Hong Kong Annual Monthly Digest of Statistics, Hong Kong Government

Hong Kong, Background Country Paper presented by the Education Department on Behalf of the Hong Kong Government at the Commonwealth Regional Seminar/Workshop on Technical Education and Industry in Hong Kong (28 September to 7 October 1976)

Hong Kong Government Gazette No.16/1976 GN817, Pensions (Special Provisions)(Hong Kong Polytechnic) Ordinance (Chapter 91)

Hong Kong Hotels Association, letter to Director of Education, JSF/hk (31 January 1972)

Hong Kong Polytechnic Annual Reports

Hong Kong Polytechnic/Technical Institutes, Education Department Hong Kong Government, Joint Guidelines on a Credit-Unitary System for Technician Study Programmes at the Polytechnic and the Technical Institutes (April 1977)

Hong Kong Training Council, Chairman, Printing Industry Training Board, letter to Director of Education (129) IT/PRIN/TW (12 July 1974)

Hong Kong Training Council, Credit Units (11 March 1977) (15)HKTC/COUN/MTG/7

Hong Kong Training Council, letter to Director of Education (18 July 1979), (131)HKTC/TTI/MTG(III)

Hong Kong Training Council, Minute 244, 36th Committee Meeting Technical Training in Institutions (22 June 1979)

Hong Kong Training Council, Paper, HKTC/1-79 (27 March 1979)

Houghton, Sir William , Dr. L.W.H. Payling and W.R. Lee, Report on a Visit to Hong Kong (20 February to 2 March 1971)

Hunting, G.A. (Gordon)

Report, A/HK2 (3 August 1973), (41)ED(TE) 7/6704/72

Report on a Visit to Hong Kong (Part B) (5 to 20 September 1975)

Technical Institutes, Hong Kong (October 1975)

Industrial Training Advisory Committee, Paper No.2B/66 (undated)

Industrial Training Advisory Committee, various manpower surveys

Information Sheet on Special Education, Education Department (May 1970)

In-Service Training, Letter from Director of Education to Chairman, Hong Kong Training Council (39) ED(TE) 134/7III (3 June 1980)

Interim Report, Ad Hoc Working Party on Division and Rationalisation of Courses between the Polytechnic and the Technical Institutes (27 April 1978)

Interim Report No.1, Committee on Technical Institutes (Period Covered: 1 January 1969 to 22 July 1969), Committee on Technical Institutes, Industrial Training Advisory Committee

Labour Department Records, various

Lee, Q.W., Legislative Council Debate, Senior Secondary and Tertiary Education, Official Report on Proceedings (5 July 1978), pp.1132 to 1143 (p.1135)

Legal Supplement No.3, Hong Kong Government Gazette (24 December 1981), Sup. to Gazette No.52, Volume CXXIII

Legg, Keith, Some Initial Thoughts on Diversification (February 1978)

Letter from Chairman, Printing Industry Training Board, Hong Kong Training Council, to Director of Education (12 July 1974)

Letter to Printing Industry Employers from Director of Education (17 October 1979)

Mackey, Sean, 9th Meeting of Working Committee on Productivity (22 April 1964), para (2)V of minutes

MacLehose, Sir Murray, address Opening Session Legislative Council (7 October 1981)

Minutes, Education Department and Polytechnic Committee Meetings, various

Minute 112, 20th Heads of Departments' Meeting, Technical College (21 March 1968)

Minutes of meeting between Technical Institutes/Technical Education Division/Labour Department staffs (29 April 1977)

Morrison Hill Technical Institute (17 July 1968)

Morrison Hill Technical Institute Diplomas and Certificates Recognised by British Professional Institutions, press release 159/75 (4 September 1975)

The Morrison Hill Technical Institute, draft for discussion (June 1968)

Morrison Hill Technical Institute, draft, the Basic Pattern of Craft Courses (18 April 1969)

Morrison Hill Technical Institute, (prospectus) third edition

Motivation, Non-cognitive Aspects of Student Performance, Society for Research into Higher Education Ltd (London, 1973)

Ng, Denis Y.M., Class Size, (179) KCTI/2/28 (19 June 1980)

Numbers of Students on Roll in Technical Institutes, Education Department records

Opening Ceremony, Haking Wong Technical Institute (5 January 1978)

Opening Ceremony, Kwai Chung Technical Institute (20 February 1976)

Opening Ceremony, Kwun Tong Technical Institute (24 October 1975)

Opening Ceremony, Lee Wai Lee Technical Institute (30 May 1980)

Opening Ceremony, Morrison Hill Technical Institute (12 October 1970)

Paper HKTC/1-79, Hong Kong Training Council (March 1979)

Part-time Day Release Courses, T17/76 (13 December 1976)

The Planning of Technician Study Programmes at Certificate/Diploma Level (25 November 1978)

Polytechnic/Education Department Liaison Group (30 September 1976), AS 652/576

Polytechnic Prospectuses, various

Practical Training, memorandum, Principal, Morrison Hill Technical Institute to heads of departments (13 April 1970), TI/11/1

Proposal of a Technical Institute, Revised (March 1964)

Proposal of a Technical Institute, Revised (September 1964)

Pun, D., (10)TTC/99I/1 (24 July 1980)

Rehabilitation Programme Plan (July 1978)

Report and Certificate of Director of Audit on the Accounts of the Hong Kong Government for the Year Ending 31 March 1980

Report by Machine-Shop and Metal - Working Industrial Committee on the Manpower Survey of the Machine-Shop and Metal Trades (2 April to 11 April 1968)

Report by the Committee on Vocational Training on the Survey on Employers' Assessment of Vocational Training and Prevocational and Secondary Modern Education Conducted in August 1976, Hong Kong Training Council .

Report by the Principals of Technical Schools (28 September 1971)

Report, Hong Kong Education Commission (1963)

Report of Opinion Survey on Green Paper on Senior Secondary and Tertiary Education (10 March 1978)

Report of the Advisory Committee on Diversification 1979

Report of the Board of Education on the Proposed Expansion of Secondary Education in Hong Kong Over the Next Decade (August 1973)

Report of the Committee on Technician Courses and Examinations (England 1969)

Report of the Third Survey of Part-time Day Release Courses by the Committee on Technical Training in Institutions of the Hong Kong Training Council (August-September 1980)

Report of Working Party on the Choice of Courses of the Committee on Technical Institutes, Industrial Training Advisory Committee (December 1969)

Report on the Survey into the Views of Students on the Various Courses in which they had Enrolled at the Technical College (December 1966)

A Report on an Enquiry into Apprenticeship and Other Similar Forms of Training in Hong Kong, 1962, by an Ad Hoc Sub-committee of the Standing Committee on Technical Education and Vocational Training

Report on Careers Talks on Technical Education Given to Secondary Schools (10 October 1979 to 28 February 1980), (14 March 1980)

Report on Disabled Students Applying for Technical Institute Courses 1979/80 Session

Report on Practical and Vocational Training for Handicapped Children, Working Group on Technical Institutes and other Training Institutes (11 July 1978)

Report on Survey of Part-time Day Release Courses August 1976, Hong Kong Training Council

Report on Survey of Part-time Day Release Courses 1978, Hong Kong Training Council

Report on Technical Education and Vocational Training in Hong Kong, The Technical Education Investigating Committee (1953)

Report on Technical Manpower Demand and Supply 1977-82, Hong Kong Training Council

Republic of Singapore Government Gazette Acts Supplement No.32 (8 December 1972)

Ritzen, Jozef M. and Judith B. Balderston, Methodology for Planning Technical Education with a Case Study of Polytechnics in Bangladesh (USA, 1975)

The Role of the Technical Institutes, BOE/6/78 (November 1978)

Secondary Education in Hong Kong Over the Next Decade (16 October 1974)

Sedgewick, P.C.M., letter to Watt Hoi-Kee (7 April 1964)

Seminar for Educators and Moderators of TEC Programmes in Hong Kong (4 December 1979)

Seminar on Curriculum Development, Pre-vocational Schools (Forms I to III)(26 July 1979)

Senior Secondary and Tertiary Education a Development Programme for Hong Kong Over the Next Decade (November 1977)

Short Courses 1970-71, The Morrison Hill Technical Institute

6th Report of the Hong Kong Training Council April 1979 - March 1980

Statistics of Education, Further Education, England and Wales, Volume 3, HMSO (London)

Student Wastage in Part-time Courses of the Technical Institutes, Committee to Review Post-secondary and Technical Education, Statistics Section, (12 May 1981)

Sub-committee on Course Structure (Technical), Interim Report (19 May 1978)

Summary of Broad Objectives 1970-1980 (68)ED(GR)2/6704/67 (21 July 1972)

Summary of Comments on Views of Employers on Courses in Technical Institutes, by Principals of Technical Institutes (March 1979)

Summary of Findings of a Survey on Employers' Views on Technical Institute Courses, Hong Kong Training Council (13 November 1978)

Survey of Part-time Day Release Students Attending Technical Institute Courses (1978/79)(September 1979)

Technical Education and Industry., Report of a Commonwealth Regional Seminar/Workshop, Hong Kong 28 September-7 October 1976, Commonwealth Secretariat

Technical Education Branch Administrative Circular 1/77, Capacity and Build-up of Technical Institutes (18 January 1977)

Technical Education in Hong Kong, Handbook for the Technical Education Branch, issue No.1 (September 1976)

Technical Education Investigating Committee, Report on Technical Education and Vocational Training in Hong Kong (30 October 1953)

Technical Institutes Comparison Study for the Academic Year 1977/78 (April 1979)

Technical Institutes Comparison Study for the Academic Year 1978/79 (April 1980)

Technical Institute Courses 1975-1976, a joint institute prospectus

Technical Institutes (joint) Prospectus 1979 to 80

Technical Institutes, Policy for the Introduction of Technician Programmes of Study and Credit-unitary System (July 1976)

Technical Institutes/Technical Teachers College, minutes, 23rd Policy Committee Meeting (14 February 1978)

Technical Institutes/Technical Teachers College, minutes, 42nd Policy Committee Meeting (3 March 1980)

Technical Institutes/Technical TeachersCollege, Policy Committee Meeting, paper for discussion, Class Size in Technical Institutes (12 June 1980)

Technical Institutes/Technical Teachers College, 31st Policy Committee Meeting, minute 528 (17 October 1978)

Technical Memorandum to the Government of Hong Kong on the Development of Vocational Rehabilitation Services in Hong Kong (Bangkok 1978)

Technical Subjects in Secondary Schools (April 1980)

Thirty-sixth Committee Meeting, Technical Training in Institutions, Hong Kong Training Council (22 June 1979)

Technicians Within the Construction Industry, East Anglian Advisory Council for Further Education, Building Sub-committee (England, Autumn 1973)

Tien, Francis Y.H., Hong Kong Training Council (28 February 1978), (12)HKTC/COUN/MTG(9)

Topley, K.W.J. (Kenneth)

Address at Chinese Manufacturers' Association Scholarship Presentation Ceremony (14 December 1979)

Address, Legislative Council Meeting (2 August 1978)

Address, Shue Yan College, 2nd and 3rd Joint Graduation Ceremony (13 November 1977)

Tracer Study of Morrison Hill Technical Institute Full-time Graduates of 1973 (August 1979)

Trench, Sir David, Governor, Colony Gets Its First Technical Institute, South China Morning Post (13 October 1970)

Tsang, H.S.,

Paper for Discussion on the Provision of General Courses and Related Courses Currently Offered at the Morrison Hill Technical Institute (1980)

Report on the Department of General Studies, Morrison Hill Technical Institute (1976)

Views of Industry Training Boards on Technical Institute Courses (20 December 1978)

Vocational Training for Girls, letter, Federation of Hong Kong Industries to Committee, Vocational Training, Hong Kong Council of Social Services (5 March 1977)

Waters, D.D. (Dan),

Address, Don Bosco Secondary Technical School, Ceremony at Open Day (14 April 1980)

A Brief Description of the Present Position on Credit-Unit System (September 1977)

Design of Courses of English for Specific Purposes, talk at opening of seminar (11 June 1980)

The Development of Technical Education in Hong Kong and Opportunities for Prevocational School Leavers, paper presented at Induction Course for Newly Appointed Teachers in Prevocational Schools (30 August 1979)

Education for Industry, paper presented to Christian Employers' Association seminar (28 November 1970)

The Form Three Leaver and Opportunities in Technical Institutes, Careers Masters' Association Seminar (4 April 1979)

The Future Role of Technical Institutes (2 September 1976)

Gearing Training to the Needs of Industry, Times Educational Supplement (London, 6 January 1978)

General Levy v General Revenue for Financing Industrial Training and 'Disestablishment' of Technical Institutes (12 September 1979)

Initial Thoughts on Diversification and the Upgrading of Industry in Hong Kong (23 August 1978)

The Morrison Hill Technical Institute, Technician Level Courses (23 June 1969)

The Morrison Hill Technical Institute, The Basic Pattern of Craft Courses (18 April 1969)

Waters, D.D. (Dan), continued,

On Technical Education, Women and all That, New Horizons no.18, Journal of the Hong Kong Teachers' Association (November 1977), pp.68 to 76

The Quality of Education in Technical Institutes (19 September 1978)

School/Industry Links (10 November 1979)

A Series of Papers on the Planning, Establishing and Running of Technical Institutes in Hong Kong;
- Paper One - General (September 1972)
- Paper Two - Equipment (October 1972)
- Paper Three - Buildings (November 1972)
- Paper Four - Staffing and Manpower Plan (January 1973)
- Supplement to Paper Four - Staffing and Manpower Plan (January 1973)

Situation Report on Technical Institute Programmes Validated by the Technician Education Council (12 November 1979)

The Status of Craftsmen and the Popularity of Craft Courses in Technical Institutes (11 January 1978)

Technical Education for Girls (11 August 1978)

The Technical Institutes the First Decade, New Horizons, No.20, Journal of Hong Kong Teachers' Association, (November 1979), p.119 to 124

What Should the Future Role of the Technical Institutes Be? (11 August 1978)

Watt Hoi-kee,

TC/10059(II) Memorandum to Director of Education (15 May 1964)

Technical Education in Hong Kong Today (undated) (C.1964)

Williams, P.R.C. (Peter),

Manpower Forecasting As a Basis for Educational Planning in Hong Kong, Paper I, (14 March 1978)

Letter to D.D. Waters, (5)ED(TE)112/1/3II (6 January 1980)

Paper II, Application of Rate of Return Analysis to Educational Planning in Hong Kong (13 March 1978)

Paper III, Economic Bases for Educational Planning in Hong Kong: Some Reflections (13 March 1978)

Working Group on Higher Education Report: The Development of Higher Education in Hong Kong (8 February 1980)

Working Party on Technical Teachers College, Report (April 1978)

Working Party Report on Senior Secondary and Tertiary Education (7 May 1977)

Wu, James M.H., Legislative Council, debate on Senior Secondary and Tertiary Education, Official Report of Proceedings (5 July 1978), pp.1153 to 1157

Yeh, Warner S.Y., Hong Kong Domestic Export Growth and Skilled Manpower (7 September 1977)

Yung, H.K., Class Size, (33) KT/132/13(25 June 1980)

Secondary Sources

Aberdeen Technical School 1935-1965, 30th Anniversary Souvenir Number

Administrative History of Education Department, draft (4 October 1979)

Apprenticeship Scheme Needs More Support, The Star (9 August 1978), p.11

Beard, Ruth M., and Isabel J. Senior, Motivating Students (England 1980)

Beeby, C.E., The Quality of Education in Developing Countries (USA, 1966)

Be Somebody in British Industry Become a Technician, Technician Education Council (undated)

Bratchell, D.F., The Aims and Organisation of Further Education (England, 1968)

Bray, Robert, and Leung Kam-fong, Report on a Study Tour to Singapore, 25 May 1980 to 7 June 1980

Bristow, Adrian, Inside the Colleges of Further Education, 2nd edition (England, 1976)

Bruce, Phillip, Technical Education Reaches the Peak in Hong Kong, Education and Training, vol.23, no.1 (England, January, 1981), pp.6 and 10

Cantor, Leonard M. and I.F. Roberts, Further Education Today, A Critical Review, (London, 1979)

Chau, Sir Sik-nin, address, annual general meeting, Federation of Hong Kong Industries (8 May 1964)

Cheng, T.C., The Education of Overseas Chinese : A Comparative Study of Hong Kong, Singapore and the East Indies (University of London MA thesis 1949)

Chen, S.L., The Key to Economic Survival, seminar at Hong Kong Polytechnic (4 May 1978)

Chung, S.Y., Hong Kong's Fight Against Adversity, Hong Kong Industrial News (12 January 1977)

Comparison Between the Graduate Employment Surveys of the Technical Institutes and the Hong Kong Polytechnic (1976-1979) (9 June 1980)

Davey, W., Problems of Expansion or Growth 1960 to 1967, Association of Technical Institutions seminar, 14 to 16 June 1967 (England, June 1967)

Development of Day Release, Evidence submitted to the Henniker-Heaton Committee by the Association of Teachers in Technical Institutions (England, October 1963)

Dikko, M. Alhaji, Industrial Training Fund in Perspective (Nigeria, January 1978)

Economic Survey of Singapore 1979, Ministry of Trade and Industry, Republic of Singapore

Editorial, A Need to Stimulate Our Government, South China Morning Post (29 November 1981)

Editorial, South China Morning Post (31 October 1978)

Editorial, South China Morning Post (20 November 1980)

Editorial, The Star (6 September 1977), p.6

Editorial, Wah Kiu Yat Po, translation (11 June 1980)

An English-Chinese Glossary of Common Technical Terms, Hong Kong Training Council (June 1977)

European Apprenticeship, CIRF Monographs, vol.1, no.2 International Labour Office (Geneve, 1966)

Experts Views Cause Delay, Hong Kong Standard (6 January 1982)

Far East Flying and Technical School Ltd (prospectus) (undated)

The Future of Further Education, Coombe Lodge Report, vol.3, no.19 (1970)

Girl Torque, South China Morning Post (25 February 1980)

Going to a Technical Institute, Education Department (April 1979)

Guide to the Apprenticeship Ordinance 1976 and the Apprenticeship Regulations 1976

Guterres, Halima, Who's Who on Schools' Review Team, South China Morning Post (21 October 1981)

Harrower, N.D., Linked Courses and School Leavers, no.4 Institute of Careers Officers (England, 1973)

Hicks, J., The Planning of Further and Higher Education, Vocational Aspects of Education (Autumn 1975)

Hong Kong 1990, The Bulletin, magazine of the Hong Kong General Chamber of Commerce (September 1977)

Hong Kong : The Facts, Education, Hong Kong Government Information Services, leaflet (May 1980)

Hong Kong Government Year Books, various

Hong Kong in Figures, Census and Statistics Department, (1980)

Hong Kong 1980, A Review of 1979

Hong Kong 1981, A Review of 1980

Hong Kong Polytechnic, Prospectuses

Hong Kong Special Report on Territory's Tertiary Sector, Times Higher Educational Supplement (8 September 1978)

Hong Kong Technical College Prospectus 1970-71

Imperial Education Conference Papers, Education Systems of the Chief Colonies not Possessing Responsible Governments (Hong Kong, 1914)

Industrial Training in Turmoil, Management Today (England, January 1981), pp.105, 106, 108 and 110

Industrial Training Needs New Impetus, editorial, South China Morning Post (5 January 1982), p.5

Industrial Training Terms, English-Chinese, Hong Kong Productivity Centre (1968)

Industry Course Scores a First, South China Morning Post (11 December 1979)

King, Kenneth, The African Artisan (1977)

Kirby, E. Stuart, Prospects for Hong Kong and Its Business, Far Eastern Economic Review, vol.XIV, no.21 (21 May 1953), pp.658 to 660

Legg, Keith, Technical Education in an Industrializing Society, Report of a Commonwealth Regional Seminar/ Workshop in Hong Kong, 28 September - 7 October 1976

MacLehose, Sir Murray, address at first presentation of awards, Hong Kong Polytechnic (1 November 1973)

MacLehose, Sir Murray, speech at opening of annual British Medical Association Conference in Hong Kong, South China Morning Post (2 November 1979)

MacLehose, Sir Murray, speech at 20th anniversary dinner, Hong Kong Management Association, (20 November 1980) Hong Kong Manager, vol.17, no.1 January 1981 issue, p.8

MacLennan, A., Educating and Training Technicians, Commonwealth Secretariat (England, 1975)

Manual of Industrial Training Terms, Industrial Training Advisory Committee (November 1971)

Manual of Technical Terms for Use in Technical Institutes, Education Department, vol. 1 (January 1975), vol.II (March 1977)

McMeekin, Robert W., Jr., Educational Planning and Expenditure Decisions in Developing Countries with a Malaysian Case Study (USA, 1975)

Morrison Hill Technical Institute Diplomas and Certificates Recognised by British Professional Institutions, press release 159/75 (4 September 1975)

National Survey of Engineering Manpower 1977, Ministry of Science and Technology, Singapore

New Board planned to Oversee Jobs Training, South China Morning Post (28 August 1981)

New Body to Mastermind Training Gets Green Light, South China Morning Post (24 December 1981), p.9

New Council Planned to Oversee Technical Training, Hong Kong Standard (24 December 1981)

Ng, Denis Y.W., A Report After a Training Programme in the United Kingdom 1978/79 (February 1979)

Official Opening Ceremony of Clothing Industry Training Centre, booklet (19 October 1977)

Opening Ceremony of the Construction Industry Training Centre, booklet (17 August 1977)

Opening Ceremony of the New Technical College by His Excellency the Governor, Sir Alexander Grantham GCMG. (2 December 1957)

Opening Ceremony of the Polytechnic's First New Building (26 October 1976)

Report on Apprenticeship Systems by a Sub-Committee of the Standing Committee on Technical Education and Vocational Training (1963)

Report on Technical Manpower Demand and Supply 1977 to 82, (August 1977)

Report on the Working Party on Organisation and Administration of National Vocational Training Programmes in Australia, Philippines and Japan, Organised by International Labour Office, Asian Field Office, Report compiled by Watt Hoi-kee (1953), part -V

Report on Vocational Training for Girls in Hong Kong, Hong Kong Council of Social Service (December 1975)

Safety in Further Education (Safety Series 5) HMSO (England, 1976)

Sandwich Courses, a Memorandum on Ministry of Education Circular 6/63, Association of Teachers in Technical Institutions (March 1964)

Simpson, R.F.

The Development of Education in Hong Kong, Problems and Priorities, Parts I and II, Ph.D. thesis (London, 1967)

Schools Pay More for Small Classes, South China Morning Post (19 February 1972)

Singapore Facts and Pictures 1979, Information Division, Ministry of Culture, Singapore

Smith,C. Selby, The Costs of Further Education, a British Analysis (England, 1970)

Sonca Industries Ltd, Employment Opportunities, leaflet (November 1977)

A Survey of Technician Training in Commonwealth Countries, Commonwealth Secretariat, (London, 1976)

Symons, Joyce, Hong Kong Education May Help China in Future, South China Morning Post (8 November 1981)

Tang King-po School Speech Day and Prize-giving, (brochure) (19 November 1976)

Technical Education for Development, edited by C Saunders (Australia, 1966)

Technical Education in Africa, edited by John S McNoun (Nairobi, 1970)

Technical Institute Makes Full Use of Its Site, Far East Builder (February 1971), pp.23 to 26

TEC News, no.12 (April 1979), p.2

There is Still Room for Improvement in the Industrial Apprenticeship Training Scheme, a Mechanic Apprentice Puts Forth His Opinions, translation, Express Daily (3 November 1977)

Tipton, Beryl E.A., Conflict and Change in a Technical College, Brunel Further Education Monograph 6 (London, 1973)

Tradition Keeping Women Away from Technical Jobs, Hong Kong Industrial News (17 November 1976,) pp.1 and 2

Trench, Sir David, Colony Gets Its First Technical Institute, South China Morning Post (13 October 1970)

Venables, Ethel

Apprentices Out of Their Time : A Follow-up Study (1974)

The Young Worker at College - a Study of a Local Tech (1967)

The Vocational and Industrial Training Board (booklet) (Singapore, undated)

Vocational Training in Hong Kong, (booklet) Hong Kong Council of Social Service (C. May 1970)

Waters, D.D. (Dan)

Design of Courses of English for Specific Purposes, talk at seminar (21 June 1980)

Problems Met in the Training of Technicians, Hong Kong Manager, vol.1, no.2 (March/April 1965), pp.22 to 27

A Report on a Study Tour on Vocational Training and Technical Education (June 1968)

Technical Education and Industrial Training in the USSR, Industrial Training International, vol.3, no.12 (England, December 1968), pp.565 to 574

Technical Institutes in the 1980s (5 January 1980)

The Vocational and Industrial Training Board Singapore (18 December 1979)

Wellens, John, Girl Technicians for Engineering, Industrial Training International, vol.9 (March 1977), pp.105 to 111

World Rehabilitation Fund Day Centre, Tenth Anniversary, booklet (5 September 1968 - 1978)

Wu, James M.H., A Short Cut to Rome, speech at Rotary Club Hong Kong Island East (19 January 1977)

Yeung, Monica, Air-Minded Men Who Never Get Off The Ground, Hong Kong Standard (15 September 1974), p.19