This item was submitted to Loughborough's Research Repository by the author.
Items in Figshare are protected by copyright, with all rights reserved, unless otherwise indicated.

# Goal-orientated knowledge management

PLEASE CITE THE PUBLISHED VERSION

PUBLISHER

© Panagiotis (Peter) John Balafas

LICENCE

CC BY-NC-ND 4.0

REPOSITORY RECORD

Balafas, Panagiotis John. 2019. “Goal-orientated Knowledge Management”. figshare.
https://hdl.handle.net/2134/10707.

This item was submitted to Loughborough's Institutional Repository (https://dspace.lboro.ac.uk/) by the author and is made available under the following Creative Commons Licence conditions.

creative commons

COMMONS DEED

**Attribution-NonCommercial-NoDerivs 2.5**

**You are free:**

- to copy, distribute, display, and perform the work

**Under the following conditions:**

**Attribution.** You must attribute the work in the manner specified by the author or licensor.

**Noncommercial.** You may not use this work for commercial purposes.

**No Derivative Works.** You may not alter, transform, or build upon this work.

- For any reuse or distribution, you must make clear to others the license terms of this work.
- Any of these conditions can be waived if you get permission from the copyright holder.

**Your fair use and other rights are in no way affected by the above.**

This is a human-readable summary of the Legal Code (the full license).

Disclaimer

For the full text of this licence, please go to:
http://creativecommons.org/licenses/by-nc-nd/2.5/

Loughborough University

University Library

Author/Filing Title BALAFAS, P.J.

Class Mark T

Please note that fines are charged on ALL overdue items.

0403819210

# Goal-Oriented Knowledge Management

by

Panagiotis (Peter) John Balafas

A Doctoral Thesis

Submitted in partial fulfilment of the requirements
for the award of
Doctor of Philosophy of Loughborough University

May 2009

© by Panagiotis (Peter) John Balafas 2009

Loughborough University
Pilkington Library
Date 18/12/09
Class T
Acc No. 0403819210

# Abstract

Knowledge Management (KM) is a mystifying and multidimensional concept. Although recognised as a discipline since the mid 1990's, KM continues to produce controversial debate amongst academics and practitioners from a variety of backgrounds. The competing schools of thought in the KM field stimulate fragmentation, which has led to the development of a wide variety of KM strategies and approaches.

The literature review reveals that the majority of organisations consider KM to be strategically important, yet at the same time the majority of KM initiatives fail. One of the most fundamental reasons for the high failure rate in KM initiatives seems to be a distinct lack of focus and direction. There isn't enough attention paid to the specific objectives that each organisation is trying to deliver with the support of KM. It is often assumed, mistakenly, that managing knowledge simply pays off in the long term.

These observations provide strong indication of the need for goal-oriented thinking in KM. This notion is reinforced by lessons learnt from a pilot KM initiative that follows conventional KM thinking and, ultimately, fails. In response, the Goal-Oriented Knowledge Management (GOKM) methodology is proposed, which focuses on organisational goals and combines various KM approaches according to context and objectives.

GOKM is applied, evaluated and refined via three case studies at the Danwood Group, HSBC Bank and HBOS Bank. An overall evaluation of GOKM is presented, based on five key criteria (*bottom-line results*, *added value*, *flexibility*, *usability* and *durability*). In addition, the impact of GOKM in each participating organisation is measured against specific criteria that are set by senior management.

The research has shown that GOKM has significant potential to be applicable in a wider context and this thesis makes a sizable contribution to the development of goal-oriented KM theory.

## Acknowledgements

The help and support that I've received from so many people in order to achieve this thesis is truly humbling. Firstly, I'd like to thank my research supervisors, Dr Tom Jackson and Professor Ray Dawson, whom have equally supported me above and beyond the call of duty. I am truly grateful. I'd also like to thank Dr Chris Hinde for his very insightful feedback and advice.

The credibility of this thesis has been significantly increased by receiving the approval of my examiners, Dr Louise Cooke and Dr Maria E. Burke. I'd like to thank them for their helpful suggestions for the final version of this thesis.

Many thanks to Darren Wilson for providing the primary funding for this thesis as well as the access needed to conduct research at Danwood. I'd also like to thank Simon Sargeant for funding my membership of professional research bodies. In addition, I'd like to thank Steve Ellis for the opportunity to perform research at HSBC Bank and contribute to his book on knowledge-based working.

I'd like to thank all my family - especially my parents (Lampros Balafas and Lesley Balafa), grandparents (John and Vera Owen) and sister (Eugenia Balafa) for their undying support. Many thanks to Grigoris Roukas, Takis Balafas and Nikos Balafas for the support, advice and entertainment, and Aristeidis Balafas and Lili Balafa for the gourmet meals that gave me energy to carry on working.

There are so many dear friends, whose support and advice made such a difference. Special thanks to John Manos, George Papadopoulos and family, Elisa Gomes and family, Kyriaki Makopoulou and Florentinos Freris, George Palikaras and Nadine Geddes, Vassilis Chouliaras, Pinelopi Marinopoulou, Dimitris Nikitakis, Perrine Tripon, Tina Andreou, Liana Alevronta and Liz Makkas.

I would also like to extend my gratitude to all of my esteemed colleagues at Loughborough University, Danwood Group, HSBC Bank and HBOS Bank for their extensive support and encouragement.

For my grandmother,

*Eugenia Balafa*,

whose wish was for me to become a scholar

and

For her granddaughter, my sister,

*Eugenia Balafa*,

I hope this inspires you to achieve - in your own way

# Table of Contents

**Chapter 1: Introduction** 1
1.1 Chapter overview 1
1.2 Background 1
1.3 Research aim and objectives 5
1.4 Thesis outline 6

**Chapter 2: Literature Review** 9
2.1 Chapter overview 9
2.2 Knowledge: philosophical and epistemological perspectives 9
2.3 Knowledge Management: an overview of perspectives and approaches 14
2.3.1 Supporters and critics of KM 18
2.3.2 KM strategies, approaches and core components 21
2.3.3 KM technology 26
2.3.4 Conclusion on KM overview and approaches 27
2.4 The evolution of goal-oriented thinking in KM frameworks and methodologies 27
2.4.1 Disagreements in KM frameworks and methodologies 27
2.4.2 The evolution of goal-oriented KM 30
2.4.3 Strategic vs. operational goals for KM 32
2.4.4 Conclusion on goal-oriented thinking in KM frameworks and methodologies 35
2.5 Evaluation of KM performance 35
2.5.1 KM evaluation perspectives 36
2.5.2 Goal-oriented KM performance measurement 41
2.5.3 Conclusion on KM performance evaluation 43
2.6 Discussion 44
2.7 Summary and conclusion 45
2.7.1 Research objectives revisited 47

**Chapter 3: Research Methodology** 49
3.1 Introduction 49
3.2 Purpose of research 51
3.3 Research philosophy 51
3.3.1 Positivist (a.k.a. scientific) 51
3.3.2 Critical theorist 52
3.3.3 Social constructivist 53
3.3.4 Interpretivist (a.k.a. anti-Positivist) 54
3.4 Research approach 55
3.4.1 Constructive versus Nomothetic versus Idiographic 57
3.4.2 Quantitative versus Qualitative 58
3.4.3 Combining Idiographic with Qualitative research 59
3.5 Research Strategy 59
3.6 Chosen research methodology 61
3.6.1 Contextualism 62
3.6.2 Grounded theory 63
3.6.3 Action research 64
3.6.4 Case studies 67
3.7 Summary 72

**Chapter 4: Pilot Study of KM at Danwood** 73
4.1 Introduction 73
4.2 Company profile: Danwood Group 75
4.3 Early forms of KM at Danwood 76
4.3.1 Customer-focused KM systems 76
4.3.2 Technical forum website 76
4.3.3 "Hints and Tips" bulletin for service engineers 77
4.3.4 "Knowledge Exchange" meetings 77
4.3.5 Conclusion on existing KM-related activities 77
4.4 The pilot KM initiative at Danwood 78
4.4.1 What is a knowledge audit? 78
4.4.2 Research methods used to perform the knowledge audit 79
4.4.3 Cross-systems' analysis of CRM and CQL 80
4.4.4 The proposed solution 82
4.4.5 The problem 87
4.4.6 Key learnings from the failed KM initiative 88
4.4.7 The resulting new approach 90
4.5 Summary 91

**Chapter 5: Design of Goal-Oriented Knowledge Management (GOKM) Methodology** 92
5.1 Chapter overview 92
5.2 Factors that influence KM 92
5.3 The impact of organisational culture on KM: Adapt KM to culture or vice versa? 98
5.4 Existing KM approaches that demonstrate goal-oriented thinking 103
5.5 The GOKM methodology 109
5.6 Identifying opportunities to test GOKM in industry 110
5.7 Summary 111

**Chapter 6: Case Study of GOKM at Danwood** 112
6.1 Chapter overview 112
6.2 Goal analysis: "reducing processing time of sales orders" 112
6.3 Scoped knowledge audit with collaborative mapping technology 114
6.3.1 Scoped knowledge audit approach 114
6.3.2 Outputs of the scoped knowledge audit 117
6.4 Designing a knowledge-based solution to improve the sales order process 122
6.4.1 Approach to designing a solution 122
6.4.2 The proposed solution 123
6.5 Securing senior support and defining the success criteria 125
6.6 Implementation of the new sales order support (SOS) team 128
6.6.1 Building strategic relationships with the workforce 128
6.6.2 Coaching team leaders as KM facilitators 130
6.6.3 Reward and recognition for knowledge sharing 131
6.6.4 The HR and technical implementation to support the new SOS model 132
6.7 Evaluation of the success of GOKM and future direction at Danwood 135
6.8 GOKM methodology review after implementation at Danwood 137
6.8.1 The refinement of the GOKM methodology 137
6.9 Summary 139

**Chapter 7: Case Study of GOKM at HSBC** **141**
7.1 Chapter overview 141
7.2 Company profile: HSBC Group 141
7.3 Problem analysis: "Losing critical knowledge when employees leave" 142
7.4 Scoped knowledge audit of the key positions 145
7.4.1 Knowledge audit approach 145
7.4.2 Outputs of the knowledge audit 145
7.5 Designing a knowledge transfer initiative 148
7.5.1 Knowledge transfer methodology 148
7.6 Securing senior support and defining the success criteria 152
7.7 Implementation of the knowledge transfer initiative 153
7.7.1 The HSBC organisational culture and "KM maturity" 153
7.7.2 Securing workforce commitment 154
7.7.3 Reward and recognition for knowledge sharing 155
7.7.4 Implementation of the knowledge transfer workshops 156
7.7.5 Review of the implementation of KTWs at HSBC 158
7.8 Evaluation of the success of GOKM and future direction at HSBC 160
7.8.1 The next stage of application of GOKM at HSBC 162
7.9 GOKM methodology review after implementation at HSBC 162
7.9.1 The refinement of the GOKM methodology 163
7.10 Summary and conclusion 165

**Chapter 8: Case Study of GOKM at HBOS** **166**
8.1 Chapter overview 166
8.2 Company profile: HBOS Group 166
8.3 Problem analysis: "Aligning the IT project portfolio with the business strategy" 167
8.4 Scoped knowledge audit of business engagement and portfolio management 170
8.4.1 Knowledge audit approach 170
8.4.2 Outputs of the knowledge audit 170
8.5 Designing a knowledge-based solution to improve business engagement and portfolio management 171
8.5.1 Approach to designing a solution 171
8.5.2 The proposed solution 171
8.5.3 The business case for the new knowledge-driven engagement and portfolio management processes 179
8.6 Securing senior support and defining the success criteria 179
8.7 Implementation of new engagement and portfolio management processes 180
8.7.1 The HBOS organisational culture / KM maturity 180
8.7.2 Securing workforce commitment 181
8.7.3 Coaching the VLT (virtual leadership team) as KM facilitators 182
8.7.4 Recognition for knowledge sharing 182
8.7.5 Implementation of new knowledge-driven processes 183
8.8 Evaluation of the success of GOKM and future direction at HBOS 185
8.8.1 The next stage of application of GOKM at HBOS 188
8.9 GOKM methodology review after implementation at HBOS 189
8.9.1 The refinement of the GOKM methodology 189
8.10 Summary 192

**Chapter 9: Evaluation of GOKM** 193
9.1 Chapter overview 193
9.2 Method of evaluation 193
9.3 Evaluation of the impact of GOKM at Danwood 195
9.4 Evaluation of the impact of GOKM at HSBC 197
9.5 Evaluation of the impact of GOKM at HBOS 199
9.6 Further refinement of the GOKM methodology 201
9.7 Conclusion 204

**Chapter 10: Conclusions and recommendations for further work** 207
10.1 Chapter overview 207
10.2 Research aim and objectives revisited 207
10.3 Conclusions and further work 210
10.3.1 Research limitations and advantages 210
10.3.2 Reflections on performing research in industry and methods used 211
10.3.3 Recommendations for further work 212
10.4 Overall conclusion 214

**Bibliography** 215

**Appendices** 252
Appendix A: Outputs of previous knowledge transfer exercises at HSBC 252
Appendix B: Typical questions asked in knowledge transfer workshops at HSBC 258
Appendix C: Sample Knowledge Harvest Report from HSBC 259
Appendix D: Recommendations for process and structural improvements at HSBC 273
Appendix E: Terms of Reference for the HBOS Group IT Virtual Leadership Team 278

# List of Figures

Figure 2.1: Classification of KM approaches 24
Figure 2.2: The involvement of KM in business processes 25
Figure 3.1: Mind map of research methodologies and choices for this thesis 50
Figure 3.2: Chosen research approach 56
Figure 3.3: Chosen research strategy 60
Figure 4.1: Intelligent Query Logging System Concept Diagram 83
Figure 4.2: Intelligent Query Logging System Data Flow Diagram 84
Figure 6.1: The knowledge audit approach at Danwood 118
Figure 6.2: The knowledge mapping approach to capture the Danwood sales order process 119
Figure 6.3: The Danwood sales order process overview 120
Figure 6.4: The Danwood process for sales order communication between branches and Head Office 121
Figure 6.5: Conceptual model of new approach for sales order communication between branches and Head Office 124
Figure 6.6: Implementation model of new approach for sales order processing/communication between branches/Head Office 134
Figure 8.1: Importance and priority of IT-Business engagement 169
Figure 8.2: Proposed method for jointly managing the IT portfolio at HBOS 174
Figure 8.3: Proposed method for managing new work requests 175
Figure 8.4: Proposed method for managing the project pipeline 176
Figure 8.5: Proposed method for capturing business knowledge/requirements 177
Figure 8.6: Proposed method for running knowledge-driven requirements definition workshops 178

# List of Tables

Table 5.1: General categories of factors that influence KM 94
Table 5.2: Key KM enablers (part 1 of 2) 95
Table 5.3: Key KM enablers (part 2 of 2) 96
Table 5.4: Analysis of inclusion of KM factors in six approaches that demonstrate goal-oriented thinking 107
Table 6.1: Performance against the success criteria agreed with Danwood's senior management 135
Table 7.1: Sample of job description amended during knowledge audit at HSBC 147
Table 9.1: Summary of the evaluation of GOKM performance in three case studies 205

# Publications

The research that is presented in this thesis has led to the following publications:

1. Balafas, P. and Jackson, T.W. (2003), "Revitalising your Systems through Cross-System Analysis", in Ross and Staples (eds.), *Proceedings of Software Quality Management 2003: Process Improvement and Project Management Issues*, Springer, pp. 115-126. ISBN: 1902505530.

2. Balafas, P., Jackson, T.W., Dawson, R.J. and Wilson, D. (2003), "Accelerated Knowledge Management (AKM): Developing Rapid KM Methodology for an Adaptive Service-Oriented Business Model", in Abbot, J., Martin, L., Palmer, R., Stone, M. and Wright, L.T. (eds.), *Abstracts from the IBM Business Innovation in the Knowledge Economy Conference*, IBM Warwick & Stratford-Upon-Avon, UK, June, pp. 10-12. ISBN: 1857213563.

3. Balafas, P., Jackson, T.W. and Dawson, R.J. (2004a), "Introduction of Goal-Oriented Knowledge Management (GOKM)", in Khosrow-Pour, M. (ed.), *Innovations Through Information Technology*, Idea Group Publishing, IRMA Conference, New Orleans, USA, May, pp. 362-365. ISBN: 1591402611.

4. Balafas, P., Jackson, T.W. and Dawson, R.J. (2004b), "Deploying Knowledge Management and Securing Future Sponsorship within a Highly Hierarchical 'Role-Based' Organisational Culture", *International Journal of Knowledge, Culture and Change Management*, Vol 4, Common Ground Publishing, ISSN (Print): 14479524, ISSN (Online): 14479575. Available: http://www.Management-Journal.com

5. Balafas, P., Jackson, T.W. and Dawson, R.J. (2005), "Case Study: Facilitating Knowledge-Based Working at Danwood", in Ellis, S. (ed.), *Knowledge-Based Working: Intelligent Operating for the Knowledge Age*, Chandos Publishing, Oxford, pp. 108-117. ISBN: 1843341204.

6. Dawson, R. and Balafas, P. (2008), "What Problem Are We Trying to Solve? -A Case Study of a Failed Knowledge Management Initiative", in Harorimana, D. and Watkins, D. (eds.), *9th European Conference on Knowledge Management*, Academic Publishing Limited, Reading, UK, pp. 139-146. ISBN: 9781906638115CD. Available: http://academic-conferences.org/2-proceedings.htm

# Chapter 1: Introduction

*"Knowledge is the only meaningful resource today. The traditional 'factors of production' - land (i.e. natural resources), labour and capital - have not disappeared. But they have become secondary."*

*** Peter F. Drucker ***

## 1.1 Chapter overview

This chapter introduces the background and rationale for this research by highlighting the relatively recent impact of technology on the way people work and the methods that organisations employ to manage their complex, interdependent business processes. The need to "manage" knowledge in organisations is explained and provides the foundations on which the aim and objectives of this research are built. Finally, an overview of the thesis chapters is provided.

## 1.2 Background

Everyone in business intuitively appreciates the value of knowledge. People need access to knowledge in order to work, and as they work, they learn, or generate new knowledge (Realisation Inc., 2006). World economies are more and more service-based economies working with a huge volume information exchange. Adding value to services requires most often a human input that needs formalised and tacit knowledge, developed through experience and intuition. The "raw material" of such knowledge based services is *information* that will be transformed into *knowledge* (Debély et al., 2007).

According to Lyman et al. (2000), the world produces between 1 and 2 billion gigabytes of unique information per year. According to Lexbe (2008) this would represent between 256 and 512 trillion pages of text. More new information has been produced within the last three decades, than in the last five millennia. However, the tools to support resource identification and use have not increased in effectiveness as rapidly as the quantity of available information.

There are many places to look for information, but some resources are more valuable or easier to use than others. As the issues of information volume and accuracy become greater, the need for new and better tools to handle these problems will also increase (Nelson, 2004).

A survey of 1,300 business people in the US, UK, Australia and Hong Kong, conducted by Denton (2001), found that 40% of them believed that their ability to make important decisions was hindered by overabundance of information, while 66% were still not receiving the information that they needed.

This could be described as a kind of "information overload" that Wurman (1989, cited in Debély et al. 2007) defines as a situation where a person does not understand available information, or feels overwhelmed by the amount of information to be understood, or does not know if certain information exists or where to find it, or knows where to find this information but does not have access to it.

Information overload costs businesses and individuals valuable time, effort and additional resources and the cost is rising (Nelson, 2004). While we struggle to accommodate new web technologies and all of their implications, however, we are paying too little attention to another reality of our time: that the traditional ways of disseminating knowledge have grown well beyond our capacity to assimilate information (Coates, 2009).

So why is there a need to "manage" knowledge? The answer lies in three relatively recent major developments in corporate environments: the explosion of *communications technology*, the advent of the *knowledge worker* and the widespread adoption of *process-oriented management* (Realisation Inc., 2006).

The exponential growth of *communications technology* has led to the Internet revolution and exacerbated the problem of information overload (Debély et al., 2007). This means that misleading information will be forwarded as efficiently as true information, with an increasing number of unanticipated or unintended

side-effects (Heylighen, 2002). Clearly, this is an issue that needs to be addressed and, in fact, some of the biggest technology firms, including Microsoft, Intel, Google and I.B.M., are banding together to fight information overload (Richtel, 2008).

Another by-product of rapid technological development has been the changing nature of the workplace and the demands placed on employees. As lower-level and repetitive tasks are increasingly automated the remaining more complex work requires employees to apply greater knowledge and adapt quickly through learning - hence many have become *knowledge workers*. The average knowledge worker loses 2.1 hours a day to interruptions associated with multitasking (Bray, 2008) – which often includes the filtering of vast amounts of information. Supporting knowledge workers' enhanced needs for access to knowledge, and for capturing, cycling and leveraging the knowledge they generate, are issues that need to be managed (Realisation Inc., 2006).

*Process-oriented management* is "knowledge work" at the corporate level. It systematically generates new and better knowledge about how best to tackle the thousands of interdependent tasks that an organisation relies on in order to be effective and to improve. However, there is often a significant challenge associated with disseminating the new knowledge across the organisation and keeping the pace of change. These are problems of knowledge that need to be managed if the organisation is to get maximum benefit from its process-orientation (Realisation Inc., 2006).

Knowledge Management (KM) is a dazzling, multi-faceted, and controversially discussed concept that attempts to satisfy the aforementioned need to "manage" knowledge. Philosophers and representatives of a variety of different disciplines are debating the meaning, definitions, and dimensions of knowledge and KM (Nonaka and Takeuchi, 1995; Greiner et al, 2007). Part of the confusion that surrounds KM can be attributed to its evolution - KM is multidisciplinary and many of the terms used to describe KM activities have been adapted from other disciplines and although they have distinctly different

meanings among those who use them, they are often used interchangeably (Chase 2006; Hicks et al. 2006).

The KM discipline seems to be suffering from high levels of fragmentation. This variation appears in terms of how KM has been perceived and defined in the literature, as well as how KM approaches have been classified and KM strategies have been directed. The competing schools of thought and perspectives on KM that stimulate division in the field are mostly the result of the natural variation of background and viewpoint of researchers and practitioners who contribute to the discipline. However, this contradiction of opinions is considered necessary for any emerging discipline to evolve. In 2001, Walsham states that an attempt at knowledge sharing with others is only valuable if one's views differ from that of the other parties in the exchange, since one learns nothing from total homogeneity of view. This statement seems like common sense, but like most definitions its truth is limited by logical boundaries. The wide range of opposing views regarding KM seem to have exceeded these boundaries by far, to the point that this variety of views has become counter-productive. Lucier (2003) reports that up to 84 percent of all KM programs fail due to this existence of fragmentation and competing schools of thought in the field. KM, as an academic area, is maturing; however, there are still problems connected with both the diversity of the theoretical base and the gap between theory and its practical application (Aidemark, 2008).

A wide variety of KM strategies and approaches have been identified in the literature review, as presented in Chapter 2. However, these do not necessarily reflect a strong disagreement of opinion between authors but rather demonstrate the adaptive nature of KM. Therefore a combination of the various approaches, depending on the context and objectives of a KM initiative, would seem to have a lot of potential to be fruitful. This has provided the basis and rationale for the research aim, which is presented in the following section.

## 1.3 Research aim and objectives

*The aim of this research is to design and evaluate a pragmatic methodology that employs the most appropriate KM methods in order to address specific organisational problems.*

The following objectives will need to be met in order to achieve the aim:

1. Review and analyse published academic literature and industry-based case studies in order to:
   1.1 Understand existing KM approaches *(Chapter 2)*
   1.2 Identify key success factors and barriers for effective KM implementations *(Chapter 5)*
   1.3 Choose the most appropriate research methodology that needs to be applied in order to satisfy the research aim *(Chapter 3)*

2. Conduct a pilot study into managing knowledge in industry *(Chapter 4)*

3. Design a KM methodology, based on analysis of KM methods from the literature review as well as lessons learnt from the pilot study *(Chapter 5)*

4. Implement the KM methodology in industry and evaluate its ability to address specific organisational problems *(Chapter 6)*

5. Refine the KM methodology, based on lessons learnt from implementing in industry *(Chapter 6)*

6. Implement the refined KM methodology in other industry settings in order to test its applicability and scalability in a wider business context *(Chapter 7 and Chapter 8)*

7. Evaluate the overall effectiveness of the KM methodology and provide recommendations for future research direction *(Chapter 9 and Chapter 10)*

## 1.4 Thesis outline

This thesis consists of ten chapters. Chapter 2 presents a comparison of KM strategies and approaches as well as KM frameworks and methodologies, including agreements and disagreements about their elements, structure, terminology and emphasis. The evolution of goal-oriented thinking in KM is then analysed, followed by a comparison of setting strategic versus operational goals for KM. The challenge of how to evaluate KM performance is also discussed, along with a review of various evaluation perspectives. Finally, the need for further research in goal-oriented KM is highlighted and, subsequently, the research objectives are revisited and updated.

A variety of research approaches are discussed in Chapter 3, in order to identify those that will be most suitable to employ for this thesis. The research methods that have been chosen are presented in a mind map and take into consideration the research objectives as well as the particular environment (industry) and circumstances in which the research is to be carried out. In addition, the literature review also provides some guidance on the research methods most commonly used in previous studies that aimed to develop goal-oriented KM frameworks and methodologies.

Chapter 4 is based on two papers by the author and his supervisors (Balafas and Jackson, 2003; Dawson and Balafas, 2008) and describes the pilot study of KM at the Danwood Group, UK. The main requirement of Danwood's senior management was initially to find ways of making improvements through KM. Therefore, a conventional knowledge audit was carried out with the aim of identifying opportunities for process improvement. The standard pattern of audit, analysis and system design initially appeared to be successful, but an unwillingness of the company to prioritise the proposed changes eventually led to the failure of the initiative. Reflection on the project outcome led to further insight into the reasons for the failure and a re-evaluation of the approach taken. The conclusions reinforced the need for a goal-oriented approach to KM.

Chapter 5 presents the Goal-Oriented KM (GOKM) methodology. The three key influencers that have shaped this methodology are: the review of existing KM approaches that demonstrate goal-oriented thinking (Chapter 2), the pilot KM study that is carried out at Danwood (Chapter 4) and the review of factors that influence KM (Chapter 5). In addition, the special importance of the relationship between KM and organisational culture is discussed.

The purpose of Chapter 6 is to describe the first implementation and evaluation of the GOKM methodology, which took place at Danwood. This began with identifying a key problem at Danwood - the prolonged processing time of sales orders - and is followed by an estimation of the impact of the problem in terms of costs and other metrics. The next step was to carry out a scoped knowledge audit that focused specifically on identifying the knowledge gaps in the sales order process. A new proposal was then presented in which some of Danwood's core departments were restructured in order to create a knowledge-driven centre of excellence. Following approval by Danwood's board of directors, the implementation of the proposal was carried out and the key observations are discussed. Finally, the GOKM methodology is revisited in order to demonstrate how the lessons learnt from this case study help to refine the approach.

Chapter 7 presents the implementation and evaluation of the refined GOKM methodology in a case study that took place at HSBC Bank. The problem to be addressed was one that many organisations have in common: a loss of critical business knowledge and experience each time an employee leaves their position - especially in the case of senior management. A knowledge audit of six key positions (identified as requiring urgent attention) revealed the critical business knowledge that was at risk. This was followed by the design and implementation of a five-step knowledge transfer initiative to minimise the loss of critical knowledge. Key observations and lessons learnt from the implementation are discussed and the GOKM methodology is reviewed and further refined.

Chapter 8 details the implementation and evaluation of the refined GOKM methodology in a third case study, this time at HBOS Bank. The author was placed in the Group IT department and, following analysis, discovered a significant misalignment between the IT project portfolio and the business strategy. A knowledge audit of how Group IT engaged with business divisions and how the IT portfolio was planned and managed revealed inefficiencies in these processes. This led to the design and implementation of a KM initiative that consisted of three key components: a shared project portfolio between Group IT and other business divisions, a knowledge-driven method for managing work requests and a knowledge-based method for gathering business requirements. The key observations and lessons learnt from the implementation are discussed and, once again, the GOKM methodology is reviewed and refined.

Chapter 9 presents the overall evaluation of GOKM by using five key criteria (*bottom-line results*, *added value*, *flexibility*, *usability* and *durability*). In addition, the impact of GOKM at Danwood, HSBC and HBOS is contrasted against the specific criteria that were agreed with senior management in each case study. Hindsight gained from the three case studies leads to some suggestions for further refinement of the GOKM methodology.

In the final chapter, the research aim and objectives are revisited in order to examine whether and how they have been achieved. This is followed by a critical analysis of the limitations and advantages of performing research in industry as well as recommendations for further work. Finally, an overall conclusion on the contribution of this research to the development of goal-oriented KM theory is presented.

# Chapter 2: Literature Review

*"The word 'know' derives from the Latin 'noscere', also meaning 'to know' ... The suffix 'ledge' may have originally meant 'process' or 'action'. Knowing this knowledge can be defined as 'the capacity for effective action'."*

*** Professor John R. Searle ***

## 2.1 Chapter overview

This chapter provides an overview of philosophical and epistemological perspectives of knowledge, introduces the fundamentals of Knowledge Management (KM), provides a definition of KM and highlights the fragmentation in the KM field by contrasting the views of both supporters as well as critics of the KM discipline. This is followed by a comparison of KM strategies and approaches as well as KM frameworks and methodologies, including agreements and disagreements about their elements, structure, terminology and emphasis. The evolution of goal-oriented thinking in KM is then analysed, followed by a comparison of setting strategic versus operational goals for KM. The challenge of how to evaluate KM performance is also discussed, along with a review of various evaluation perspectives. Finally, the need for further research in goal-oriented KM is highlighted and, subsequently, the research objectives are revisited and updated.

## 2.2 Knowledge: philosophical and epistemological perspectives

Plato (427-347 BC), as a pupil of Socrates, wrestled with a wide variety of moral and philosophical questions in the form of dialogues and expressed his idealist doctrine via "Socratic questioning". He believed that "conclusions" didn't have any special status as our assumptions and beliefs are open to perpetual questioning. Plato defined knowledge as "perception" and "true judgement". There is no consensus to this day about knowledge except it is derived from perception that can provide a rational justification for it (Jashapara, 2004). Interestingly, Plato, was thought to have considered that we are born with a

certain amount of knowledge (Burke, 2003).

Aristotle (384-322 BC), Plato's star pupil, saw philosophy as an on-going attempt to explore the complexities of human experience. After a sharp reaction against Platonism, he achieved a synthesis of the natural and rational aspects of the world in *The Metaphysics* (Aristotle, 1998). In every area, his approach was to start with "appearances" (ordinary beliefs and language), work through puzzles (work through contradictions and find beliefs that were most basic and central) and come back to "appearances" with increased structure and understanding (Jashapara, 2004). In essence, it could be concluded that Aristotle laid some of the foundations of empiricism.

Around five BC, a group of Athenian "intelligent sages", who came to be known as "Sophists", advocated that it was impossible to tell if any thing was really true, and thus they developed a particular way of life. They established schools that trained people in how to debate and promote their own ideas in order to persuade, e.g. in the political arena. Sophists have been criticised for not basing their ideas on robust evidence or established knowledge and thus lack integrity and honesty. Sophists would counter argue that their epistemology was more honest than most in that they were not alluding to know anything–but freely admitting that they knew nothing for certain (Burke, 2008).

Rene Descartes (1596-1650) made a very important contribution to the principles of modern philosophy. He was concerned with what it is actually possible to know for certain (Burke, 2003) and saw "certainty" as a state of mind and "truth" as a property of statements about the external world (Jashapara, 2004). He decided that there must be starting points for philosophy other than those already proposed – many of which he found to be problematic. Descartes proposed four rules for thinking which he labelled his "Method of Cartesian Doubt" (Warburton, 1998). These can be interpreted as: first, never accept anything except clear and distinct ideas; second, divide each problem into as many parts as are needed to solve it; third, order thoughts from the simple to the complex; and finally, always check thoroughly for oversights (Burke, 2003).

This led Descartes to his first certainty: *"Cogito ergo sum"* or *"I think, therefore I am"*, which he saw as the foundation on which to base the rest of his philosophy (Burke, 2003). He aimed to *"lay the foundation of all philosophical and scientific knowledge entirely by a priori reasoning – i.e. by reasoning that does not appeal to senses, experience or observation"* (Horner and Westacott, 2000). Therefore, Descartes can be said to hold a rationalist view of knowledge (Burke, 2003) with some foundations originating in Plato's idealist perspective of knowledge.

John Locke (1632-1704), an empiricist, believed that everything we conceive or construct has come from experience. His dictum was *"Don't blindly follow convention or authority. Look at the facts and think for yourself"*. He concluded that the mind is like a "white paper" which is blank when we are born and that all understanding and knowledge comes from our experiences (Burke, 2003). Locke develops the concept of 'idea' as something sensory that has the properties of a sensory image before the mind. An 'idea' can also cover thoughts, pains and emotions. He views reasoning as a mental operation of these 'ideas' which leads to knowledge or belief. In this sense, knowledge is a perception of relationships between ideas (Jashapara, 2004). Locke's ideas could be said to have some foundations originating from Aristotle's method of reviewing and challenging "appearances".

Locke and Descartes can be thought of as *"the founding fathers of two opposing schools of philosophy – empiricism and rationalism, one considering knowledge as the experience of the senses and one trusting to the speculations of reason"* (Kenny 1984, cited in Burke 2003).

Immanuel Kant (1724-1804) approached the theory of knowledge from a different perspective by considering the limitations of what we can truly know (Burke, 2008). He saw knowledge as bounded by "possible experience" (Jashapara, 2004), i.e. *"human beings can only know of things which we are able to experience and understand"* (Burke, 2008). Although Kant advocated science as the best way to develop knowledge and understanding of the world, he also acknowledged that science cannot measure the "noumenal world" – a

non-empirical world that isn't governed by scientific laws and where humans exercise their free will. However, Kant also stated that as a race we are not yet capable of fully understanding that world (Burke, 2008).

Gilbert Ryle's (1900-1976) philosophy of mind is focused on a destruction of Cartesianism. He argues that the world of experience is composed of two entities: physical things and mental things. One of Ryle's most significant contributions is that he makes a distinction between intelligence ("knowing how") and possessing knowledge ("knowing that"). Intelligence can only have meaning in activity and is associated with the ability of a person to perform tasks (based on knowledge). It is the action that exhibits intelligence. Ryle argues against the Cartesian idealism that sees knowledge and intelligence as part of the same mental process (Jashapara, 2004).

Michael Polanyi (1891-1976) comes from a similar behaviourist background as Ryle and develops the notion of tacit knowledge from a number of experiments. His starting point of human knowledge is *"the fact that we can know more than we can tell"* (Polanyi, 1967). He uses Ryle's distinction between "knowing that" and "knowing how" but suggests that they are not distinct entities but rather are two aspects of knowing that are ever present with the other. He uses the example of riding a bicycle and the need to have tacit knowledge to stay upright. Staying upright and engaged in the activity of riding is part of "knowing how" to ride a bicycle. However, many people may find it difficult to articulate clearly ("knowing that") what keeps them upright (Jashapara, 2004).

The term "knowledge" can become confused with the terms "data" and "information" – this has been especially observed in organisations where the terms are used interchangeably. Davenport and Prusak (1998) view data as discrete objective facts about events that may take the form of structured records of transactions in organisations. Information is seen as a "message" or "flow of messages" that informs the data and makes a difference in the receiver's insight. The most dominant concepts of organisational knowledge within the current literature are the notions of "tacit" and "explicit" knowledge

(Nonaka, 1994). The foundation of these concepts can be traced back to the work of Gilbert Ryle and Michael Polanyi.

From an organisational perspective, knowledge may be viewed as an intangible asset held within the minds and actions of the organisation's employees (Nonaka and Takeuchi, 1995). Secondly, knowledge may also take the form of a tangible asset that may be manipulated through technology (Nonaka and Takeuchi, 1995). These views return to Polanyi's (1967) notion of explicit and tacit knowledge (Parsons, 2007).

Davenport and Prusak (1998) also view organisational knowledge through the "tacit" and "explicit" dimensions and define tacit knowledge as the expertise, insights and intuition of the organisation's workforce and explicit knowledge as the knowledge that is committed to storage, such as documents, words and archives (Parsons, 2007). These two hierarchical types exhibit a degree of interchange ability and the knowledge of an organisation is interpreted as a combination of both types (Davenport and Prusak, 1998). However, Nonaka et al. (2000) advocate that tacit knowledge underpins the majority of business transactions and while considerable efforts have been made to visualise and store tacit knowledge, there remains a substantial amount of knowledge that will stay within the heads of the businesses employees. This can often lead to the question of "How is knowledge created in organisations"?

The traditional view of knowledge creation championed by authors such as Nonaka (1991) typifies a chain of events that link together and allow the continuous interaction of tacit and explicit knowledge within organisations. The key actors within this process are the employees who are deemed to carry out this process on a daily basis and this in turn generates organisational and innovative knowledge (Parsons, 2007).

Nonaka and Takaeuchi's (1995) widely acclaimed model, which was based on earlier work by Nonaka (1991, 1994), proposes four "modes" of knowledge conversion and creation:

- *Socialization*: "tacit to tacit" knowledge exchange via shared experience and interaction
- *Combination*: "explicit to explicit" knowledge combination, i.e. resorting, re-evaluating and re-contextualising explicit knowledge can lead to "new knowledge"
- *Externalization*: "tacit to explicit" knowledge conversion, via the use of metaphors, figurative language and technology to make knowledge accessible on a wider scale
- *Internalization*: "explicit to tacit" knowledge creation is the reverse of Externalization and is primarily achieved via the learning process.

This section has presented some philosophical and epistemological perspectives of knowledge as well as some modern views on the role of knowledge in organisations. The following section focuses on how organisational knowledge can be "managed" and presents a critical analysis of the various approaches that have been identified in the literature.

## 2.3 Knowledge Management: an overview of perspectives and approaches

In the post-industrial economy, sometimes termed the "knowledge economy" (Drucker, 1992), KM has become an emerging discipline that has gained enormous popularity amongst academics, consultancies and practitioners (Jashapara, 2004). KM has been recognised as a discipline since the mid 1990's (Jennex, 2005; Gurteen, 2008) and yet there still seems to be a distinctive lack of a commonly accepted definition for it. KM is very difficult to define precisely due to a lack of general consensus in KM literature (Egbu 2004; Bishop et al. 2008). KM contains a much more complex meaning than the terms "management" and "knowledge" alone. Various topics in different contexts with different perspectives are discussed under this term (Gao et al., 2008). The strength and challenge of knowledge management as an emerging discipline comes from its interdisciplinary approach (Jashapara, 2004).

The many competing schools of thought have resulted in widespread division in the field, even at the fundamental level of giving a definition for KM. It is interesting to see how the definitions provided in the literature show a relatively high level of differentiation by domain and how these have evolved over time. However, it has become apparent that these definitions are in most cases closely related to the background, industry, discipline and general school of thought to which each author subscribes and in some cases even relative to the goals that they are trying to achieve. Roy (2001) supports this observation by stating that KM has been defined by management consultants, redefined by computer scientists and undefined by marketers of software products. Therefore, some sample definitions of KM that seem to be more widely accepted in the academic community have been carefully selected as follows:

*"The objectives of KM are a.) to make the enterprise act as intelligently as possible to secure its viability and overall success and b.) to otherwise realise the best value of its knowledge assets."* (Wiig, 1997)

*"KM is concerned with the exploitation and development of the knowledge assets of an organisation with a view to furthering the organisation's objectives. The knowledge to be managed includes both explicit, documented knowledge, and tacit, subjective knowledge. . ."* (Davenport and Prusak, 1998)

*"KM is the explicit and systematic management of vital knowledge and its associated processes of creating, gathering, organizing, diffusion, use and exploitation, in pursuit of organisational objectives."* (Skyrme 1999, cited in Jashapara 2004)

*"KM consists of all methods, instruments and tools that in a holistic approach contribute to the promotion of core knowledge processes"* (Mertins et al. 2000, cited in Jashapara 2004)

*"KM is the examination of mechanisms that facilitate critical organisational processes, the measurement of their performance and the development of*

*practical solutions that deliver one or more KM objectives."* (Levett and Guenov, 2000)

*"KM is mainly understood by practitioners from manufacturing and the service industry as part of corporate culture and a business-oriented method: The sum of procedures to generate, store, distribute and apply knowledge to achieve organisational goals."* (Heisig, 2001)

*"KM is improving the ways in which firms facing highly turbulent environments can mobilize their knowledge base (or leverage their knowledge 'assets') in order to ensure continuous innovation."* (Newell et al. 2002, cited in Jashapara 2004)

*"KM is meant to promote ongoing business success through a formal, structured initiative to improve the creation, distribution, or use of knowledge in an organisation."* (Lau et al., 2003)

*"KM includes all the activities that utilize knowledge to accomplish the organisational objectives in order to face the environmental challenges and stay competitive in the market place."* (Greiner et al., 2007)

*"KM comprises a range of practices used in an organisation to identify, create, represent, distribute and enable adoption of insights and experiences. Such insights and experiences comprise knowledge, either embodied in individuals or embedded in organisational processes or practice."* (Gurteen, 2008)

As previously mentioned, the definitions provided above are carefully selected samples from a plethora of definitions. For the purpose of clarity, a specific definition has been produced for this research (adapted from definitions provided by Davenport and Prusak, 1998 and Gurteen, 2008):

***Knowledge Management (KM) comprises a range of practices used in an organisation to identify, create, represent, distribute and enable adoption of insights and experiences with a view to furthering the organisation's objectives. Such insights and experiences comprise knowledge, either embodied in individuals or embedded in organisational processes or practice.***

The motivations for applying KM principles vary widely depending on where, how and why it has been applied. A representative (but not exhaustive) sample of motivations, adapted from KPMG (1999, cited in Levett and Guenov 2000) and Gurteen (2008) would be as follows:

- Facilitating and managing innovation and organisational learning
- Understanding the value and contribution of intellectual assets and increasing their worth, effectiveness and exploitation
- Improving the quality of decision making and other intelligent tasks
- Fostering collaboration, knowledge sharing, continual learning and improvement
- Solving challenging problems with new or newly acquired knowledge
- Making available increased knowledge content in the development and provision of products and services, leading to shorter new product development cycles
- Managing business environments and allowing employees to obtain relevant insights and ideas appropriate to their work
- Making it easy to find and reuse sources of know-how and expertise, whether they are recorded in a physical form or held in someone's mind
- Transforming the business strategy according to newly created or acquired knowledge.

The sample of motivations provided above demonstrates just some of the many opportunities for applying KM for organisational benefit. Nevertheless, KM has both supporters and critics, as discussed in the following section.

### 2.3.1 Supporters and critics of KM

Another level of division in KM appears in how it is actually perceived. The two most dominant notions seems to be:

a.) those who perceive it as just another management "fad" that will soon die out and be replaced by the next generation of management disciplines, these could be named as the "KM critics".

b.) those who perceive KM as essential to the future of the organisation, these could be named "KM supporters". A few examples given from both notions are discussed below.

Sangeetha and Rao (2000) seem to believe that KM is just an evolved version of Information Management. By studying the role of librarians in comparison to knowledge managers they eventually conclude that KM is not really a new concept and that simply acquiring IT and management skills would be sufficient for managing knowledge effectively. The fundamental mistake in Sangeetha and Rao's perception of KM is their narrow focus on the individual level of managing knowledge without examining the organisational or business process perspective.

Wilson (2002) examines the origins, basis and components of KM from a management consultancy perspective. Following a relatively large literature review he concludes that KM is an umbrella term for a variety of organisational activities, none of which, are concerned with the management of knowledge. Wilson also highlights problems in the distinction between knowledge and information and further concludes that focus should be set on managing information and work practices through improved communication initiatives. It seems that in this case the misconception of KM has resulted from a misunderstanding occurring at the fundamental level: knowledge versus information.

Freund (2003) discusses KM only at the individual level and believes that knowledge is simply not manageable within any context other than our own minds. He also supports the idea that as humans we do not realise how much

we know until some stimuli forces us to engage and use it. Devane and Wilson (2008) seem to agree with Freund (2003) by stating that knowledge needs to be approached as something non-manageable. Something that is inextricable from the individuals within the business, and that the best way to 'manage it' (that is, get the best use out of it) is to allow the individual to manage it themselves.

Freund (2003) also goes as far as placing KM in the same category as other management "fads" such as downsizing, total quality management, the balanced scorecard, core competencies, business process re-engineering, systems thinking and benchmarking, amongst many others, most of which he seems to disregard as consecutive failures. Wilson (2002) places KM in the same "fad list", however he underlines that not all fads were failures and that they simply got phased out by newer management disciplines and theories. He concludes that KM is just a new term for managing information, people and work process. However, what does not seem to have been taken into account is the potential power of the actual interaction of information, people and work processes that can generate new knowledge and consequently revitalise competitive advantage.

It seems that the arguments of KM critics are based on misinformed perceptions of what knowledge and managing knowledge really means and to what extent it is different from previous management theories. What KM critics perhaps need to be shown is that managing knowledge is a fundamentally different approach to the established managerial concepts. A change has happened at the most fundamental level: the resource. Wiig (1997) reports how the economic focus has shifted over time starting with the pursuit of operational excellence (making the most of limited resources), then moving to acquiring product leadership with clever products, later on nurturing customer intimacy and finally leading to the "knowledge economy". Knowledge has replaced natural resources (such as machinery or even financial capital) and operational efficiency as the number one provider of competitive advantage. Shariq (1997) explains how we are entering an era where the future is going to be determined by our ability to use knowledge wisely and recognise it as a key strategic resource. Like other

resources, knowledge needs to be created, transferred and deployed through comprehensively designed processes. Also in line with this notion, Skyrme and Amidon (1998) explain how knowledge and its management have become a "core competence" that companies must develop in order to succeed in the dynamic global economy.

This new economy has been entitled as the "knowledge economy" where, according to KPMG's "KM Research Report" in 1998, organisational knowledge is becoming more important than the traditional sources of economic power. Stewart (1997) extends this notion by explaining how knowledge has actually become the most important factor in economic life. Stewart characterises knowledge as the chief ingredient of what we buy and sell and the raw material with which we work and also underlines its most beneficial attribute: indispensability.

In addition to the KM supporters' versus KM critics' views of managing knowledge, there seems to be a middle ground also appearing where KM is viewed optimistically but only if applied under specific conditions. For example, Lambe (2002) argues that KM may be useful to large corporations but is not necessary for SMEs (Small and Medium Enterprises):

*"Small and Medium Enterprises mostly do not need KM, beyond common sense stuff like having regular internal meetings, soaking up lots of close knowledge about customers and competitors, having a decent records management system, and being able to communicate their identity and their services effectively. We are, with our SMEs, in danger of swamping an industrious, motivated and extremely practical force in the economy with too many trendy ideas."*

Arguably, the largest success stories in implementing KM have indeed surfaced from examples given by large corporations. Ahmed et al. (2002) report how Xerox developed "Eureka", a system for engineers and technicians to share technical knowledge that was proven to successfully cut costs and decrease the

re-inventing of solutions. Skyrme (1997) provides examples from a variety of successful KM initiatives. Dow Chemical focused on the active management of their patent portfolio, which resulted in generating over $125 million in revenues from licensing and other ways of exploiting their intangible assets. Skandia Assurance developed new measures of Intellectual Capital (IC) and guided their managers on increasing IC value. As a result, revenues grew much faster than their industry average. Texas Instruments shared best practices between their semiconductor fabrication plants and saved the equivalent of investing in a new plant. A similar approach was pursued by Hewlett-Packard (HP), by sharing expertise that already existed in the company, but not known to their development teams, HP now brings new products to market much faster than before. Although all of the examples given are in fact sourced in the KM efforts of large corporations, this does not prove that KM is not suitable to smaller business models. Lambe's arguments for the unsuitability of KM to SMEs seem quite weak. His perception of KM seems to be entirely focused on aiding the improvement of organisational efficiency. However, there are many other important potentials of KM that have not been taken into consideration when making this judgement such as innovation, transforming the business strategy and more, as mentioned in section 2.2.1. There are many authors who believe that a well-designed implementation of KM can contribute significantly to the efficiency and competitiveness of an enterprise irrespective of its size (e.g. Bullinger et al. 1997, cited in Wildner 2008; Salöjärvi et al. 2005; Wildner 2008).

### 2.3.2 KM strategies, approaches and core components

Many practitioners and researchers in the field have examined the strategic aspects of KM. Some of the most widely accepted strategies (e.g. O'Dell et al., 1999; Chase, 1997b; McElroy, 2000) have been identified as:

- *Transfer of Knowledge and Best Practices*
- *Innovation and Knowledge Creation*
- *Intellectual Asset Management*
- *Customer-Focused Knowledge*
- *Personal Responsibility for Knowledge*

- *KM as a Business Strategy*

These strategies are closely related to the motivations for applying KM, as described in section 2.2.1. The first two of these strategies, i.e. "*Transfer of Knowledge and Best Practices*" and "*Innovation and Knowledge Creation*" seem to have received the most attention in the literature and are often associated with the management of *explicit* and *tacit* knowledge respectively.

Tacit knowledge represents internalised knowledge that an individual may not be consciously aware of how he or she accomplishes particular tasks. At the opposite end of the spectrum, explicit knowledge represents knowledge that the individual holds consciously in mental focus, in a form that can easily be communicated to others (Gurteen 2008). Two different KM strategies have been discussed in the literature for sharing tacit and explicit knowledge: the *codification* strategy and the *personalisation* strategy (Greiner et al., 2007).

The objective of the codification strategy is to collect knowledge, store it in databases, and provide the available knowledge in an explicit and codified form (Greiner et al., 2007). The codification approach focuses on amalgamating individual knowledge in a firm, putting it in a cohesive context, and making it available to organisational members. Such an approach entails separating the knowledge from its creator (Desouza, 2003). According to Gao et al. (2008), KM that follows the codification strategy is an advanced level for discussing technology, R&D, or product/service innovation and development, data mining or knowledge discovery from databases, MIS, IT infrastructures or supporting software, expert systems, decision-support systems, or knowledge repositories (Davenport, 1993; Stewart, 1997; Boisot, 1998; Davenport and Prusak, 1998).

The personalisation strategy involves individuals making knowledge requests of experts associated with a particular subject on an ad hoc basis. In such an instance, expert individuals can provide their insights to the particular person or people needing this (Gurteen 2008). Knowledge sharing is fostered through people-to-people interactions and dialogue. Knowledge is not separated from its

source, because of the need to identify that source in requesting the required knowledge (Desouza, 2003). The personalisation strategy concentrates on facilitating or enabling a "good" space for knowledge creation like "Ba (space)", "community of practice" or a knowledge-creating/sharing culture (Nonaka and Takeuchi, 1995; Sveiby, 1997; Wenger 1998, cited in Gao et al. 2008). Information Technology still has a role to play in helping to find the people with the relevant expertise and/or communicate knowledge via electronic means, e.g. discussion forums (Greiner et al., 2007).

Some companies deploy both approaches – codification and personalization – within the same KM initiative. This supports propositions that codification and personalization are not two extremes but rather dimensions that can be combined (Gammelgaard and Ritter, 2005).

Choi and Lee (2003) categorise KM approaches in accordance to explicit and tacit oriented perspectives that corporate companies have demonstrated in case studies and present four categories: *passive*, *system-oriented*, *human-oriented* and *dynamic* (see Figure 2.1). According to Choi and Lee (2003), organisations that demonstrate a passive KM approach are those that have hardly any comprehension of managing knowledge systematically and do not utilize organisational structure, culture or IT explicitly for this purpose. As a result they are criticized for reducing their own effectiveness in the current and future turbulent business environment. Companies of a system-oriented style put more emphasis on codifying and reusing explicit knowledge through the exploitation of advanced IT solutions leading to faster response times to the customer and lower cost per "knowledge transaction". These firms also believe that they can eliminate the need for further communication and coordination among organisational members. On the other hand, those subscribing to the human-oriented style focus on acquiring and sharing tacit knowledge through forming informal social networks. In this approach, communication, trust and informality overrule database retrieval systems and procedural documentation because better ways can be potentially discovered through interaction. Choi and Lee (2003) recommend that the dynamic KM approach should be the one

to be adopted by firms if they want to succeed in managing knowledge. This approach integrates system- and human- oriented characteristics by using technology as a support tool for interactive social groups over unlimited geographical span. This provides the opportunity to exploit existing knowledge and create new knowledge with innovative potential.

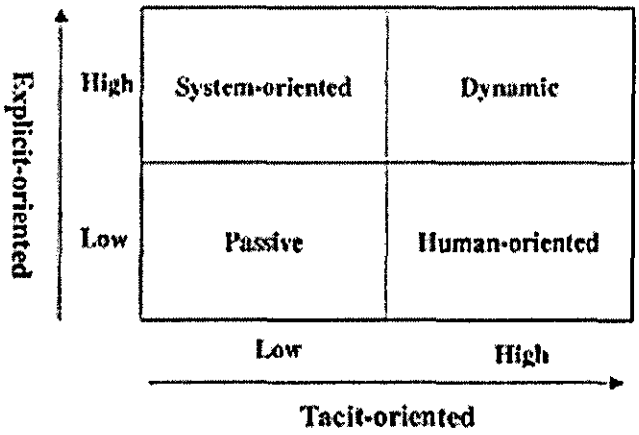


Figure 2.1: Classification of KM approaches according to Choi and Lee (2003)

So far, the KM strategies and approaches presented have mainly focused on "technology" or "people" or both. However, the missing element seems to be "process". There are many authors who believe that the core components of KM consist of *People*, *Process* and *Technology* (e.g. Shaw et al. 2007, Ahmed et al. 2002, Massey et al. 2002).

KM initiatives need to focus first and foremost on nurturing the people who have the knowledge, with technology playing a supplementary role only (Robertson and Hammersley, 2000). Furthermore, the organisation needs to foster appropriate processes by which the knowledge of its individual members can interact for the benefit of the whole organisation (Hammer et al. 2004, cited in Shaw et al. 2007). Maier and Remus (2003) suggest that a process focus is a way of bridging this apparent dichotomy between the people- and the technology-oriented approaches. However, the business should not nurture business processes whilst stifling that informal knowledge sharing between

people by which much organisational work is performed (Brown and Duguid 2000).

Oldigs-Kerber and Sorensen (2002) refer to People, Process and Technology in KM as *Human Capital, Social Capital* and *IT Capital* respectively and present an interesting diagram of the various KM dimensions in Figure 2.2.

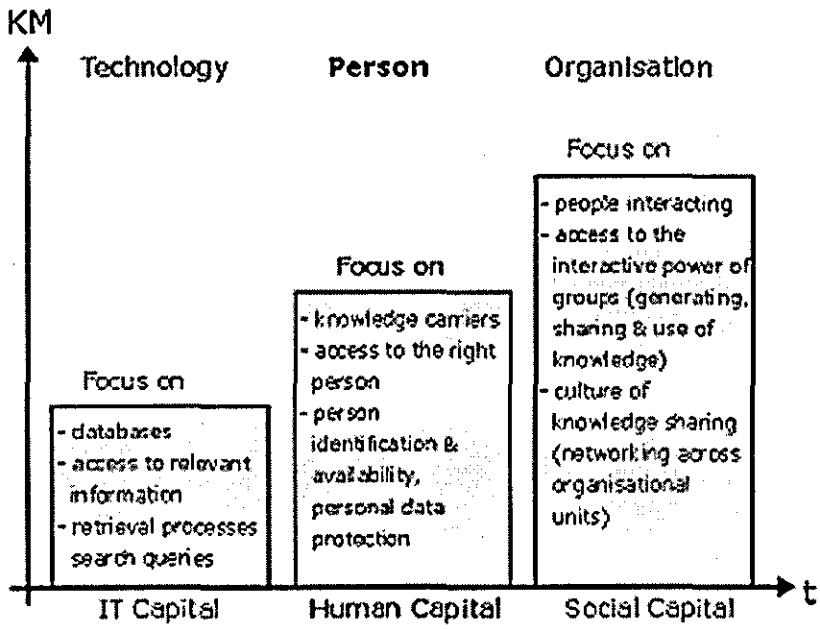


Figure 2.2: The involvement of KM in business processes
(according to North et al. 2001, cited in Oldigs-Kerber and Sorensen 2002)

McElroy (2000) classifies KM approaches as *supply-side* and *demand-side*. Supply-side KM focuses on providing the appropriate on-demand knowledge to the individual. The emphasis is on knowledge sharing from a top-down perspective. It is also usually technology-centric in its orientation (capturing, codifying and sharing explicit knowledge). Demand-Side KM focuses on satisfying organisational demand for the production of new knowledge. The emphasis in this approach is on knowledge creation from a bottom-up perspective. It is usually people and process-centric in its orientation (collaboration, organisational learning and innovation).

The variety of KM strategies and approaches that have been identified in the literature does not necessarily reflect a strong disagreement of opinion between authors but rather demonstrate the adaptive nature of KM. Therefore a combination of these strategies seems appropriate, depending on the context and objectives of a KM initiative. For the purpose of this research, McElroy's classification is favoured, simply because it combines the tacit/explicit focus with the core KM components of People, Process and Technology.

### 2.3.3 KM technology

A wide variety of systems and technologies have been developed in order to support KM activities (e.g. Milton et al., 1999; Reimer et al., 2000; Liao, 2003; Gurteen, 2008). Luan and Serban (2002) define the main categories of KM systems as: business intelligence, knowledge base, collaboration, content and document management, portals, customer relationship management, data mining, workflow, search, and e-learning. The literature review also highlighted additional systems that support KM, such as virtual workspaces, people-finder tools, knowledge network enablers, on-demand knowledge providers for business processes, knowledge modelling tools, resource planning tools and social computing tools that support communities of practice (e.g. blogs and wikis).

In 2005, Wong states: *"it is indisputable that one of the key enablers for implementing KM is IT. In essence, it can certainly play a variety of roles to support an organisation's KM processes. However, it is noteworthy to recognise that IT is only a tool not an ultimate solution"*. Call (2005) agrees and extends this notion by stating: *"the tools used for capturing, analyzing and distributing knowledge do not have to be very high tech at all. While technology surely facilitates all of these actions, KM should not be undertaken for the sake of technology. Rather the technology should address the needs of the KM system's goals"*.

In agreement with Wong (2005) and Call (2005), one of the main assumptions of this thesis is that technology is a support tool rather than a main driver for

KM. In other words, the choice of KM strategy would drive the choice of KM technology, whether simple or complex, depending on the requirements. Thus, a wider review of literature that has a specific focus on KM technologies would be considered out of scope for the purpose of this thesis.

### 2.3.4 Conclusion on KM overview and approaches

This section has introduced the fundamentals of KM, highlighted the fragmentation in the KM field, contrasted the views of both supporters as well as critics of the discipline; and provided a definition of KM for this research. In addition, KM strategies and approaches have been compared and the relationship between technology and KM has also been discussed. The fundamental conclusion of this section is that a combination of the various KM strategies identified, depending on the context and objectives of a KM initiative, seems like an approach that has a lot of potential to be fruitful. This has prompted further examination of goal-oriented thinking in KM, as presented in the following section.

## 2.4 The evolution of goal-oriented thinking in KM frameworks and methodologies

This section demonstrates the evolution of goal-oriented thinking in KM by first examining the main disagreements in existing frameworks and methodologies, followed by an analysis of how the need for a goal-oriented approach gradually became apparent and finally leads to a comparison of goal-oriented KM approaches that have a strategic focus versus those that demonstrate an operational focus.

### 2.4.1 Disagreements in KM frameworks and methodologies

In general, a framework is a concise description of the major elements, concepts and principles of a particular domain. The main aim of a framework is to explain the domain and define a standardised schema of its core content as a reference for future design implementations. A KM framework names the major KM elements, their relationships and the principles that define the way in which

these elements interact. In this way, it provides the reference for decisions about the implementation and application of a KM system/project within an organisation or an enterprise (Metaxiotis et al., 2005). The KM frameworks can be classified as either prescriptive, descriptive or a combination of the two (Holsapple and Joshi 1999, cited in Metaxiotis et al. 2005).

Prescriptive frameworks provide general directions about the types of KM procedures, without providing specific details of how those procedures can/should be accomplished, while descriptive frameworks characterise or describe KM. To date, the majority of frameworks presented in the literature are prescriptive. Many researchers have tried to review the KM frameworks that have been presented in the literature, to compare and analyse them, as well as to give general directions on what a KM framework should include and in what order (Metaxiotis et al., 2005). The main and generally accepted finding seems to be that a codified, universally accepted framework has not been established for KM (Weber et al. 2002, cited in Metaxiotis et al. 2005; Rubenstein-Montano et al., 2001; Maier and Remus, 2003;). However, after reviewing the literature, this is not necessarily viewed as a problem, because different organisational goals are likely to require a different approach and focus.

It seems that the fragmentation of the KM field also extends to how KM frameworks and methodologies are constructed at the fundamental level, i.e. core components, emphasis etc. Although someone can find some commonalities among the frameworks, a brief review can reveal the variations that exist between them (Liao 2003, cited in Metaxiotis et al. 2005).

Metaxiotis et al. (2005) provide a representative summary of the main streams of disagreements regarding KM frameworks. These relate to:

- **The necessary elements of a KM framework**

There is confusion about what should be included in a KM framework, irrespective of being prescriptive or descriptive. According to Holsapple and Joshi (2002) this disagreement is the main reason that many research efforts

are orientated towards the direction to standardise what a KM framework should contain.

- **The ordering or structuring of KM frameworks**

This concerns mainly the prescriptive frameworks, since they usually include some tasks that must be followed in a particular flow. In many cases, the same elements can be found in the opposite order in different frameworks (Rubenstein-Montano et al. 2001).

- **The terminology used on KM frameworks**

In many cases different KM frameworks include the same elements, but different terms are used for the same (or similar) activities or processes (Apostolou and Mentzas 1998, cited in Metaxiotis et al. 2005; Liebowitz and Megbolugbe 2003; Lytras and Pouloudi 2003). This inconsistency, regarding the used terminology, is a phenomenon that is also common in other KM aspects and it is considered among the most relevant issues for standardization (Weber et al. 2002 and Ergazakis et al. 2004, both cited in Metaxiotis et al. 2005).

- **The emphasis that is given in the different KM aspects**

The KM frameworks presented in the literature tend to emphasize different aspects of KM. The majority of frameworks do not address KM in an equal way (e.g. People, Process and Technology). For example, many of the KM frameworks focus only on the knowledge cycle process or tasks, and consequently, other critical elements of KM such as integration of KM with the strategic goals of the organisation, the people involved in KM activities, and the cultural context within which KM is developed are neglected (Davenport 1995, cited in Metaxiotis et al. 2005, Rubenstein-Montano et al. 2001).

Rather than trying to analyse the myriads of frameworks, it is important to pay attention to why there are so many disagreements and, more importantly, why there seems to be so much failure associated with a large proportion of KM initiatives. Therefore, the rest of this section will focus on how the idea of goal-oriented KM has evolved while existing KM frameworks and methodologies that

demonstrate elements of goal-oriented thinking will be specifically addressed in Chapter 5.

### 2.4.2 The evolution of goal-oriented KM

"An InformationWeek survey indicated that 94 percent of companies considered KM to be strategically important to their business" (Kleindl 2003, cited in Call 2005) yet it is "reported that at least half of all KM initiatives fail; some peg the failure rate as high as 70 percent" (Rossett 2002). How can so many companies fail at something that is obviously so important to them? After all "this is not rocket science . . . its good sense and managerial basics" (Harvard Business School Press 1998, cited in Call 2005).

Al-Ghassani et al. (2004, cited in Bishop et al. 2008) propose two broad categories of KM perspectives: the outcome perspective, which examines the benefits an organisation gets from managing its knowledge, and the process perspective, which considers the process of controlling the creation, dissemination and utilisation of knowledge. It appears that a large proportion of KM efforts have followed the latter of these perspectives and not paid enough attention to the former, i.e. "what is the expected outcome from applying KM?". This could qualify as one of the most fundamental reasons for the high rate of failure in KM initiatives - a distinct lack of focus and direction, because not enough attention is paid to the specific objectives that each organisation is trying to deliver with the support of KM. Many authors seem to agree with this notion (e.g. Kalling 2003; Call 2005; Wong 2005; Greiner et al. 2007; Bishop et al. 2008; Gao et al. 2008; Wildner 2008).

The lack of specific direction for KM often seems to occur because managing knowledge is being applied "for the sake of managing knowledge", i.e. with the expectation that managing knowledge simply pays off in the long term. For example, Rowley (1999, cited in Ray 2008) defines the objectives of KM as to *"create knowledge repositories to store knowledge and information"*, *"improve knowledge access"* through connectivity, *"enhance the KM environment"* in order to allow its effective creation, transfer and use, *"manage knowledge as an*

*asset"* and value to the firm. Another example is provided by Honeycutt (2000, cited in Ray 2008) who states that every successful KM design has goals to focus on which are *"filtering, integration, sharing, and offline access"*. However, simply trying to manage knowledge as a resource without a specific goal is unlikely to bring improvement to performance, unless it is by chance rather than by design. This notion seems to be supported by a number of authors (e.g. Morey 2001, Kalling 2003, Call 2005, Wong 2005, Greiner et al. 2007, Bishop et al. 2008, Wildner 2008).

In 2003, Kalling states that KM research indicates a strong focus on knowledge itself: what is it and how can we manage it? Knowledge is a resource, and we know a lot about the nature, the attributes of knowledge, and we do know about how to develop knowledge, i.e. to learn. But the factors that convert knowledge into improved performance are not well studied, especially not the management implications. Kalling leads to the conclusion that the link between KM and performance, which so frequently is taken for granted, might not always exist. Morey (2001) seems to agree by stating that many KM programs operate under the implicit assumption that all improvements from KM-enabled learning are equally beneficial. Because of this, organisations spread their KM investments too thin on organisation-wide initiatives that consequently do not produce near-term business results. Another example of support for this idea is provided by Greiner et al. (2007) who state that not all KM activities have been shown to positively influence business performance or to result in a competitive advantage. They also state that: *"depending on the business strategy a different KM strategy is more or less adequate and results in a positive business performance"*.

Al-Ghassani et al. (2004, cited in Bishop et al. 2008) suggest that due to the differences between organisations' business objectives and cultures it is impossible for one KM system to suit every organisation, and that the key is to align the initiative with economic performance and strategy. Wong (2005) extends this idea by asserting that successful KM focuses on supporting the critical success factors (CSFs) that have been defined by managerial planning

in order to maximise the effectiveness of the business. Wong continues to assert that a suitable KM strategy is one that is well adjusted to the situation and context of the organisation in hand. In order to attach more significance to a KM strategy, it should support an imperative business issue of an organisation. Wildner (2008) agrees by highlighting that one of the key requirements of successful KM is an orientation towards dealing with actual problems.

Call (2005) provides a good summary of the notions discussed above by stating: *"Those in the know realise that KM is different at every turn; it is continually changing and evolving. What constitutes a successful KM project at one company may not spark the faintest interest at another. The key to successful KM is not to get caught up in any one aspect of it. Begin with a specific goal in mind".*

One of the key conclusions that has been reached so far in this section is that KM should be framed as a business enabler that contributes to the achievement of goals, i.e. "it is a means to an end rather than an end in itself". In fact, this conclusion is a reaffirmation of a similar notion expressed by the author and his supervisors in a paper published in 2004, which introduced the principles of goal-oriented KM (Balafas, Jackson and Dawson, 2004a), before many of the previously discussed papers were published. These initial principles were based on a combination of operations theory with business process improvement and KM for faster bottom-line results (Goldratt, 1994; Wiig, 1997; Armistead, 1999; Heisig, 2001; Magnani, 2001; Morey, 2001).

### 2.4.3 Strategic vs. operational goals for KM

According to Shaw et al. (2007), as KM is such a fundamental activity which impacts upon most areas of the business, organisations need to take an overarching strategic approach to align KM with business strategy, rather than KM existing as random and isolated pockets of activity. There are quite a few authors that seem to agree with this notion (e.g. McCann and Buckner 2004; Snyman and Kruger 2004).

Davenport et al. (1998, cited in Greiner et al. 2007) as well as Zack (1999, cited in Shaw et al. 2007) appear to support a similar notion by agreeing that KM should be tightly related to objectives and business strategies of the organisation or subunit of the organisation. The reference to "subunit of the organisation" recognises that the subunit can act independently and even though it will subscribe to the overall organisational strategy, it is very likely to have its own strategy and operational goals to achieve with the support of KM. This could hardly be considered as "random and isolated pockets of activity", as previously mentioned. This further implies that although there are many benefits to taking a wider strategic view of KM it does not always have to be implemented as a company-wide initiative.

There is also the issue of having to deal with problems (e.g. at the operational level) that are outside the normal boundaries of following organisational strategy. Spence (1999, cited in Shaw et al. 2007) asserts that one only needs to talk to a range of managers to discover that, in many organisations, strategic thinking and strategic planning are often replaced with "fire-fighting" and the reliance on emergent solutions. Storey and Barnett (2000) present a case study of an organisation that is forced by an external crisis into "fire-fighting" for survival. In this case they conclude that the KM initiative was "dropped" because it was not viewed as a mission-critical activity. The issue here was that KM was viewed only in its capacity to support long-term strategy, while ignoring the possibility that smaller-scale KM solutions can actually assist with the "fire-fighting".

In 2008, Wildner uses a problem-oriented approach to KM in order to deal with local problems and reports success in terms of bottom-line results. He also accepts that his approach can lead to local solutions disregarding a holistic consideration of the organisation. However, Wildner goes on to state that this is accepted – relinquishing a comprehensive view of KM in favour of a broader acceptance of the approach and quick solutions for urging problems. Using KM to deal with urgent problems seems to also be the focus of Morey (2001), who combines a process-oriented KM approach with operations theory in order to

achieve faster bottom-line results. Morey proposes that KM needs to be viewed as a continuous process that first discovers where KM-enabled learning will address a restriction on the performance of critical business processes and then implements an appropriate intervention in the knowledge development cycle that will accelerate the transfer and application of knowledge to the business process that requires it. The approaches described by Morey (2001) and Wildner (2008) seem to be successful at achieving rapid results. However these results are more likely to have an impact at a local level rather than at a wider organisational level. There is still a place for strategic rather than operational KM.

In 2007, Shaw et al. describe some of the crises that, based on the study of 16 organisations, have encouraged the taking of a strategic view of KM. These include:

- Becoming swamped with data and unable to forecast accurately as a result
- Merging of three organisations which necessitated the new organisation to act differently
- Needing process change to remain competitive
- Retaining essential knowledge during site relocation.

Although these issues can be addressed by taking a strategic view of KM, it is important to recognise the impact of scope. If the scope of the crises affects the whole organisation then clearly a more strategic approach would probably be most appropriate (assuming that the organisation in not in "fire-fighting" mode). However, any of these crises could become an operational rather than strategic issue if the scope of the problem is limited to a more local level, in which case a more localised KM effort might bring faster results and face less risk of being "dropped". It is also important to highlight that the examples of crises presented by Shaw et al. (2007) could be made more specific. The generic description of the problems makes it more difficult to decide and measure how KM can contribute to their solving. The measurement of KM performance seems to be a much wider issue and will therefore be addressed separately in section 2.4.

### 2.4.4 Conclusion on goal-oriented thinking in KM frameworks and methodologies

The key conclusion of this section is that KM does not need to have an exclusively strategic or exclusively operational orientation. The goals to be supported by KM can be either strategic or operational or both, depending on many dynamic factors (e.g. organisational priorities, market conditions, etc.). Therefore, a truly holistic goal-oriented approach would need to be able to support an organisation in all conditions and for goals of variable size and scope.

## 2.5 Evaluation of KM performance

In 2000, Chong et al. performed a survey of senior managers at 25 international organisations to tackle the key question: "Where does KM add value?". The findings indicated that the majority were not able to determine the business value of their investment in KM. At the same time, most respondents agreed that they had lost business opportunities as a result of poor knowledge practice.

Measuring performance of KM initiatives has been a hot topic for many practitioners and researchers (e.g. Edvinsson, 1997; Bontis et al, 1999; Dekker and de Hoog, 2000; Holsapple and Singh, 2001; Ahn and Chang, 2003; Chen and Chen, 2006; Tseng, 2008), especially in relation to the corporate domain. Nevertheless, it is still considered by many authors to be a heavily under developed aspect of KM (e.g. Ruggles 1997, cited in Chen et al. 2008; Holsapple and Singh, 2001; Bose, 2004), despite the fact that attempts to measure the value of KM date back to the beginnings of the discipline (Chen and Chen, 2006).

According to Holsapple and Singh (2001), KM measurement involves the valuation of knowledge resources and knowledge processors, including quantitative methods, qualitative assessment, performance review, and benchmarking. It is a basis for evaluation of control, coordination, and leadership; for identifying and recognising value-adding processors and

resources; for assessing and comparing the execution of KM activities; and for evaluating the impacts of an organisation's conduct of KM on bottom-line performance. Kankanhalli and Tan (2004, cited in Scarso et al. 2008) define the objectives of KM measurement as: providing funds, setting targets, giving feedback for implementation, and deriving lessons for future initiatives. Demonstrating results to senior management in order to maintain their support is perhaps one of the most important objectives of KM measurement, especially because executives who feel that KM investments do not pay off may prematurely cut those initiatives (Bose 2004; Desouza and Raider 2006).

Many companies today continue to invest substantially in KM while still encountering substantial difficulties in measuring the value generated by KM. Actually, how KM-related costs and benefits can be effectively measured is still a puzzling problem (Zboralski and Gemünden, 2006) both at the conceptual and operational level. This is due to the intangible nature of such activities, as well as to their very long-term horizons. Even though several methods and approaches have been proposed in the literature, they are still far from becoming an established practice (Kim, 2006). In particular, they are very heterogeneous, often derive from techniques formerly developed for other goals (for instance: traditional accounting), and combine ad hoc elements. Also, they are generally poor in usability (Scarso et al., 2008).

In recognition of the issues discussed above, the following section will present the various perspectives of KM performance evaluation and will seek to identify an approach that fits with goal-oriented KM theory (as described in section 2.3).

### 2.5.1 KM evaluation perspectives

There have been many studies that attempt to classify KM evaluation perspectives (e.g. Bontis et al., 1999; Holsapple and Singh, 2001; Kankanhalli and Tan 2004, cited in Scarso et al. 2008; Loermans and Fink, 2005). However, it appears that Chen and Chen (2006) provide one of the most comprehensive classifications of KM evaluation perspectives, following a literature review of 108 KM papers from 1995 to 2004. They identify six broad approaches to KM performance evaluation:

- Quantitative analysis
- Qualitative analysis
- Internal performance analysis
- External performance analysis
- Organisation-orientated analysis
- Project-orientated analysis.

*Quantitative analysis* in KM evaluation includes traditional financial indicators (e.g. Return-On-Investment) as well as non-financial indicators that tend to be related to behavioural factors and system usage (e.g. the number of topics on a knowledge sharing discussion board). One of the key benefits of quantitative analysis in KM evaluation is that it avoids subjective judgement, in contrast to qualitative analysis (Chen and Chen, 2006). Scarso et al. (2008) provide an example of the quantitative approach to KM evaluation by describing a case study where the value of a central KM team in an organisation is determined by comparing the cost of the team (i.e. wages etc.) with the monetary value of the services and deliverables that the team produces in one year. The calculation revealed that the central KM team produced ten times more value than the cost of the team. They explain that although this approach provides financial data that is familiar to senior management, it is a method that is difficult to apply and can also be inappropriate in many situations where employees are involved in KM but not as a full-time role. In the case of quantitative analysis for KM evaluation, it is perhaps more likely to be useful in a wider scope when combined with other approaches (e.g. qualitative), so as to contribute towards a more holistic view of performance.

*Qualitative analysis* in KM evaluation generally includes typical non-quantitative techniques (e.g. questionnaire, expert interviews, etc.). It is usually proposed as a way to "measure" the tacit components of knowledge. Traditionally, most scholars have suggested financial indicators to display the value of KM; now, more and more scholars are insisting on evaluating KM performance using non-financial indicators, in a social and behavioural sciences approach (Chen and Chen, 2006). Levett and Guenov (2000) defined qualitative metrics for KM performance evaluation according to:

- Motivation (how well the employees are motivated to work productively)
- Knowledge capture (the ability to capture important knowledge)
- Stored knowledge (the usefulness of captured knowledge in solving new problems)
- Personnel training (the effectiveness of employee learning mechanisms)
- Knowledge transfer (the effectiveness of sharing important knowledge)
- Creative thinking (the ability of employees to create new solutions)
- Knowledge identification (the effectiveness of identifying relevant knowledge)
- Knowledge access (the effectiveness of accessing important knowledge).

Although these measures seem to cover a comprehensive range of KM angles, they seem difficult to apply in practice and some appear to subscribe to the idea of "managing knowledge for the sake of managing knowledge", as previously discussed in section 2.3. Qualitative analysis in KM evaluation could perhaps be more effective when linked to specific organisational goals. In addition, it is also more likely to be more effective when combined with more objective methods, e.g. quantitative, in order to, as previously mentioned, be able to build a more holistic view of performance.

*Internal performance analysis* in KM evaluation focuses on process and goal achievement efficiency, and evaluates the performance of KM processes by measuring the gap between targets and current values. Methods proposed include: balanced scorecard, performance-based evaluation, activity-based evaluation, and so on (Chen and Chen, 2006). Dekker and De Hoog (2000) present an example of activity-based evaluation in a case study concerning loan revision performed in a large bank. The model that is illustrated in the case study calculates the return on a knowledge asset (its value) as the difference between the costs incurred for using the knowledge asset in activities to produce products minus the revenues generated by these products. In the particular case study, the application of this model led to the unexpected result that the return on most knowledge assets for loan revision was negative. Dekker and De Hoog (2000) also make the observation that strategically distributing product revenues over activities, resources and knowledge areas is

probably the hardest part. Perhaps one way to counter or at least reduce this problem would be to distribute revenues over groups of similar activities, resources and knowledge areas rather than individual entities. Overall, these measures seem quite complex and time-consuming, but nevertheless seem useful in applications of KM that have a particular focus on process efficiency.

*External performance analysis* in KM evaluation consists of comparing a firm's KM performance with benchmark companies, primary competitors, or industry average. Benchmarking is seen as a tool for identifying, understanding, and adopting best practices to increase the operational performance of knowledge assets (Chen and Chen, 2006). Carpenter and Rudge (2003) present a KM benchmarking exercise that took place at British Energy Power and Trading (BEPET). The benchmarking criteria were sourced from the *British Standard Guide to Good Practice in KM* as well as from the *Most Admired Knowledge Enterprises (MAKE)* awards – as designed by a web-based community of leading knowledge-based organisations. These were namely: creating an enterprise knowledge culture, top management support for managing knowledge, developing and delivering knowledge-based products and solutions, maximizing enterprise intellectual capital, creating an environment of knowledge-sharing, establishing a culture of continuous learning and managing customer knowledge to increase loyalty/value. The primary methods of data collection used to perform the benchmark were interviews and surveys. This approach seems quite subjective and indeed Carpenter and Rudge (2003) do reach the conclusion that there is a significant amount of bias that has an impact on the benchmark results. One of the main reasons for this bias is the apparently exclusive use of qualitative methods. Therefore, the suggestion would be to use both qualitative as well as quantitative methods of data collection in benchmarking, in order to produce results that are more credible.

*Organisation-orientated analysis* in KM evaluation considers the entire organisation and focuses on its multidimensional aspects. The primary objective is to estimate the KM performance at the various levels of the whole organisation (Scarso et al., 2008). In the horizontal perspectives, KM

performance evaluation is focused on leadership, cultural, technological and process dimensions. In the vertical perspectives, KM performance evaluation is focused on strategy, management, and implementation layers. Intellectual Capital (IC) measurement models are often used in this category of KM evaluation. Edvinsson (1997) and Sveiby (1998) present some of the most highly acclaimed examples of Intellectual Capital measurement, with the first application being performed in a case study at Skandia (a large insurance company). Such models are designed to measure human, innovation, process, and customer capital, and represent a major step toward providing precisely the information that firms and their stakeholders need to foresee the future (Chen and Chen 2006). This approach seems quite effective, although it seems restricted to the strategic rather than operational view of KM and would therefore only be suitable for a subset of KM approaches. It is also likely to require a significant amount of time and effort in order to provide significant results. The amount of effort could perhaps become more manageable by taking a targeted (e.g. focus on knowledge-centric organisational units) rather than holistic approach (e.g. review entire organisation) to intellectual capital measurement.

*Project-orientated analysis* in KM evaluation aims at evaluating the outcomes of individual KM projects seen as a means towards the solution of specific business problems. Measurement of the entire organisation's KM performance is very difficult from process, leadership, culture or technology perspectives; it is obvious that better efficiency and effectiveness in KM performance can be reached through a project-orientated approach (Chen and Chen, 2006). Del-Rey-Chamorro (2003) develops a framework to assess the contribution of KM projects within a business against its corporate objectives. The framework uses a set of key performance indicators (KPIs) that are developed in line with the business strategy. Business processes receive particular attention in Del-Rey-Chamorro's (2003) framework because they play a key role in developing KPIs. Del-Rey-Chamorro (2003) explains this by stating: *"by knowing the environment in which the measurement is taking place, practitioners can develop suitable KPIs for each specific environment. The measurement of the knowledge*

*captured and located in database for a product development department is not comparable to that of a marketing department".* Although this approach is practical in the sense that it provides relevant measures against specific goals, it is worth noting that KPIs can be quite laborious to develop and tend to not be reusable.

In the case of goal-oriented KM, it would appear that the project-oriented approach from Chen and Chen's (2006) classification of KM evaluation perspectives would be the most appropriate model to adopt. However, this would be based on the assumption that the goals of KM are only operational rather than strategic in nature. As previously argued in section 2.3, goal-oriented KM can support strategic as well as operational purposes, depending on context. Therefore, simply following the project-oriented approach to KM evaluation would not be sufficient in all circumstances. After having reviewed Chen and Chen's (2006) classification of KM evaluation perspectives, Scarso et al. (2008) lead to the conclusion that the *"toolbox of the KM evaluation methods is well equipped"* and that the key question seems to be: *"how can practitioners decide which method is more suitable to their situation?".* Indeed this is a very important question and will therefore be examined, from a goal-oriented perspective, in the following section.

### 2.5.2 Goal-oriented KM performance measurement

Some studies argue that knowledge cannot be measured, but that activities or outcomes associated with applying knowledge can be measured (Ruggles, 1998). This way of thinking about KM evaluation seems to be compatible with goal-oriented KM thinking. Greiner et al. (2007) use "organisational impact" as a method of measuring the performance and sustainability of KM initiatives. The key questions that they propose so as to measure KM performance are:

1.) Was the identified problem resolved by the KM initiative?

2.) Can the companies report monetary or non-monetary success stories?

3.) Is the KM system used and can it survive without strong support by management?

This method seems more compatible with goal-oriented thinking; however, the questions seem quite restricted in scope. For example, a KM initiative will not necessarily resolve a problem in its entirety, but it can contribute towards the solution. In this case, the extent of that contribution is what would need to be measured, or at least estimated. Another restriction seems to be the use of success stories as a measure of success. Whilst success stories are surely a useful tool, they are not the only way of measuring KM success, as described in section 2.4.1. Finally, a KM system is likely to always need support from senior management because this nurtures and maintains a culture that is KM friendly, which is critical to KM success – this will be discussed in more detail in Chapter 5. If organisational impact were to be used as one of the methods to measure goal-oriented KM, the questions to be answered would, most likely, need to be less restricted in scope and adapted to the particular context of what is being measured.

Lehner et al. (2008) present a similar, but less restricted, method of measuring KM performance to that of Greiner et al. (2007), by using *success factor analysis*. One of the most significant advantages of this approach seems to be the multi-dimensionality of the way in which success can be defined. This enables a systematic creation of improvement programmes and clearly indicates where the highest priorities in the enterprise are. This approach also seems quite similar to that of Del-Rey-Chamorro's (2003) framework of KPIs (previously discussed in section 2.4.1) and therefore demonstrates similar advantages (e.g. practical, relevant measures) and disadvantages (e.g. laborious process, generally non-reusable measures). The issue of non-reusable measures could perhaps be partially addressed by attempting to develop measures that are in part context-specific and in part generic, or at least applicable in more than one situation.

From the review of the various KM evaluation perspectives, approaches and frameworks, it has become apparent that there is not a clear choice or "single winner" in the competition to define a standard model for KM evaluation. However, the urgency for a standard model is questionable. Scarso et al. (2008)

state that a clear "one best approach" has not emerged yet. The implementation of KM systems strongly depends on the specific organisational context of application, which makes it even harder to adopt standard measures. Several methods can thus be used - and need to be used - even in the same organisation. Scarso et al. (2008) predict that organisations, aware of the difficulty to measure KM in a standard way, are likely to adopt a "pragmatic" approach, based on experience, where mixed approaches are used as a way of taking into account their own goals and particular context. They characterise this approach as sensible but also warn that there are some disadvantages. For example, the integration of different sources of data in a consistent way could be quite a difficult exercise. Nevertheless, this could be identified as a fair "trade-off" between relevance of metrics and the effort needed to measure them. Another problem that Scarso et al. (2008) present with the pragmatic approach is that it may lead to a highly heterogeneous environment where any company can adopt somewhat idiosyncratic and "local" approaches, which can hinder the development of common KM practices. However, for KM in practice, organisations are more likely to be interested in a KM evaluation framework that yields significant results for them, and less likely to be concerned with whether the framework is commonly used or ad hoc. Still, it is nevertheless important to recognise that a common framework for KM evaluation seems to be pursued by many authors in the KM field and is likely to continue that way. For example, Lehner et al. (2008) state that there are still significant areas of academic research to be covered in this area and that not only is the base for definition of success in the context of KM in need of additional work, more work is now necessary in the refinement of the assessment instrument – from a first prototype to an empirically validated measurement instrument.

### 2.5.3 Conclusion on KM performance evaluation

Goal-oriented thinking in KM seems more aligned with the "pragmatic" approach to performance evaluation and the intention is to develop a KM methodology that is applicable in industry, where organisations tend to require practical solutions. It was therefore concluded that the development of a common measurement tool for KM evaluation would be out of scope for the purpose of

this thesis. This, however, is not meant to devalue the efforts of the many authors who seem to be pursuing this goal. It is simply a question of compatibility with goal-oriented thinking as well as recognition of logical limits for the scope of the thesis. Therefore, this thesis will aim to demonstrate KM evaluation via a pragmatic mix of approaches, depending on the particular context and goals of each organisation studied.

## 2.6 Discussion

The KM field has demonstrated a fragmented image where no commonly accepted framework or methodology exists. However, this is not necessarily a problem. It may simply mean that the focus of KM research should shift from attempting to provide a generic KM solution to pursuing a more adaptive, goal-oriented KM approach. The variety of motivations for applying KM, as previously discussed in section 2.2.1, are a testament to the need for a more goal-oriented approach. Organisations' different cultures and different business goals make it impossible that one KM system or tool would suit every organisation and developing methods and strategies for implementing KM needs the integration of several issues such as people, culture, and technology (Al-Ghassani et al. 2004, cited in Bishop et al. 2008).

There are a large number of success factors and barriers to effective KM. These are discussed in detail in Chapter 5. However, it is worth mentioning at this point that one of the most important barriers that seems to be emerging from the literature is a lack of strategic alignment of KM with business objectives (Shaw et al. 2007; Chinowsky and Carrillo 2007, cited in Fuller et al. 2008; Ray 2008). Each organisation has its mission, and the achievement of organisational objectives requires the assistance from different domains of knowledge (Chang et al., 2008). For a KM initiative to be effective, it must fit into the organisation's missions and objectives. Also, it is equally important to set a priority for these objectives (Woods and Sheina 1999, cited in Chang et al. 2008).

The lack of strategic alignment of KM with business objectives often results in a lack of project funding for KM initiatives. This lack of funding has also been identified as a significant barrier to successful KM implementation (e.g. Carrillo et al. 2004, cited in Fuller et al. 2008; Ray 2008). Many authors (e.g. Wong, 2005; Shaw et al., 2007; Bishop et al., 2008; Chang et al., 2008; Ray, 2008;) highlight the importance of gaining support for a KM initiative from senior management. This can often be quite a challenging task. A goal-oriented approach that is aligned to business objectives is considered to be more likely to gain support from "sceptical" senior management and therefore also receive the necessary project funding.

As discussed in section 2.3, KM does not always have to be applied to the entire organisation. There are often problems, goals, challenges that need to be addressed in different ways at a localised level. An adaptive, goal-oriented approach is more likely to be able to satisfy such KM requirements, rather than a generic company-wide KM strategy. Also, as discussed in section 2.4, existing KM performance frameworks tend to be complex and difficult to apply in practice. Therefore, there is a strong case for following a more pragmatic approach to measuring the performance of KM. A goal-oriented KM approach provides the necessary focus to identify and measure a variety of success criteria according to the particular goals that are being pursued.

## 2.7 Summary and conclusion

This chapter introduced the fundamentals of KM, provided a definition of KM for this research and highlighted the fragmentation in the KM field by contrasting the views of both supporters as well as critics of the KM discipline. In addition, KM strategies and approaches were compared and the relationship between technology and KM was also discussed. The focus then moved onto investigating KM frameworks and methodologies, including agreements and disagreements about their elements, structure, terminology and emphasis (e.g. people, process and technology). The evolution of goal-oriented thinking in KM was then analysed, followed by a comparison of setting strategic versus

operational goals for KM. The challenge of how to evaluate KM performance was also discussed, along with a review of various evaluation perspectives as well as specific evaluation methods for a goal-oriented KM approach. Finally, the need for a goal-oriented approach to KM was discussed, along with the expected benefits, such as improved strategic alignment and higher probability of gaining senior management support and sponsorship.

The key conclusions of this chapter can be summarised as:

- A combination of various KM strategies, depending on the context and objectives of a KM initiative, seems like an approach that has a lot of potential to be fruitful
- KM does not need to have an exclusively strategic or exclusively operational orientation. The goals to be supported by KM can be either strategic or operational or both. Therefore, a truly holistic goal-oriented approach would need to be able to support an organisation in all conditions and for goals of variable size and scope.

- Goal-oriented thinking in KM seems more aligned with the "pragmatic" approach to performance evaluation and, hence, this research will aim to demonstrate KM evaluation via a pragmatic mix of approaches, depending on the particular context and goals of each organisation studied.

Although there are some studies that demonstrate elements of a goal-oriented approach (e.g. Dataware Technologies Inc., 1998, cited in Rubenstein-Montano et al. 2001; Robinson et al, 2004; Call, 2005; Chang et al., 2008; Bishop et al., 2008), these appear to be either theoretical in nature or applied but only in a limited scope. Therefore, there is still plenty of scope for developing and applying a goal-oriented KM approach with pragmatic metrics via case studies in industry and contributing to the development of goal-oriented KM theory. This has prompted the review and update of the research objectives in the following section.

### 2.7.1 Research objectives revisited

Following up from the literature review and the relevant conclusions, as described above, the research aim and objectives have been updated as follows (**amendments appear in bold font**):

*The aim of this research is to design and evaluate a pragmatic methodology that employs the most appropriate KM methods in order to address specific organisational* ***goals or*** *problems.*

The following updated objectives will need to be met in order to achieve the aim:

1. Review and analyse published academic literature and industry-based case studies in order to:
   1.1 Understand existing KM approaches *(Chapter 2)*
   1.2 Identify key success factors and barriers for effective KM implementations *(Chapter 5)*
   1.3 Choose the most appropriate research methodology that needs to be applied in order to satisfy the research aim *(Chapter 3)*

2. Conduct a pilot study into managing knowledge in industry *(Chapter 4)*

3. Design a **goal-oriented** KM methodology, based on analysis of KM methods from the literature review as well as lessons learnt from the pilot study *(Chapter 5)*

4. Implement the **goal-oriented** KM methodology in industry and evaluate its ability to address specific organisational problems with **pragmatic metrics** *(Chapter 6)*

5. Refine the **goal-oriented** KM methodology, based on lessons learnt from implementing in industry *(Chapter 6)*

6. Implement the refined **goal-oriented** KM methodology in other industry

settings in order to test its applicability and scalability in a wider business context *(Chapter 7 and Chapter 8)*

7. Evaluate the overall effectiveness of the **goal-oriented** KM methodology and provide recommendations for future research direction *(Chapter 9 and Chapter 10)*

This chapter completes Objective 1.1 (*understand existing KM approaches*), while also laying some of the foundations for the achievement of Objective 1.2 (*identify key success factors and barriers for effective KM implementations*). In addition, this chapter also provides some of the groundwork for the achievement of Objective 3 (*design a goal-oriented KM methodology, based on analysis of KM methods from the literature review...*). Both Objective 1.2 and Objective 3 are fully addressed in Chapter 5. Finally, this chapter has also made a contribution towards the achievement of Objective 4 (*... and evaluate its ability to address specific organisational problems with pragmatic metrics*), which is further addressed in Chapter 6. The following chapter focuses specifically on addressing Objective 1.3 (*choose the most appropriate research methodology that needs to be applied in order to satisfy the research aim*).

# Chapter 3: Research Methodology

*"If politics is the art of the possible, research is surely the art of the soluble. Both are immensely practical-minded affairs."*

*** Sir Peter Medawar ***

## 3.1 Introduction

A variety of research approaches are discussed in this chapter, in order to identify those that will be most suitable to employ for the proposed research. The research methods that have been chosen for this thesis are highlighted in Figure 3.1 and take into consideration the research objectives as well as the particular environment (industry) and circumstances in which the research is to be carried out. In 2000, Moore provides a guiding principle by stating that it is vital that the research design be kept simple and clear with methods selected that are most likely to achieve the objectives of the research. The mind map in Figure 3.1 is a fusion and adaptation of classifications of research methodologies (e.g. Firestone, 1987; Strauss and Corbin, 1990; Galliers, 1992; Alavi, 1994; Yin, 1994; Cornford and Smithson, 1996; Myers, 1997; Klein and Myers, 1999; Healy and Perry, 2000; Järvinen, 2001; Sekaran, 2003) and each dimension is explained in one of the following sections. The literature review also provided some guidance on the research methods most commonly used in previous studies that aimed to develop goal-oriented KM frameworks and methodologies (e.g. Rubenstein-Montano et al., 2001; Robinson et al., 2004; Call, 2005; Bishop et al., 2008; Chang et al., 2008). Many of these studies start with a literature review of existing KM methodologies and analyse critical success factors of KM, based on previous KM implementations. In addition, the majority of these studies demonstrate the use of action research and qualitative analysis (e.g. case studies, interviews, workshops and surveys) as their primary research methods. These methods, among others, are discussed in the following sections and their suitability for this research is examined.

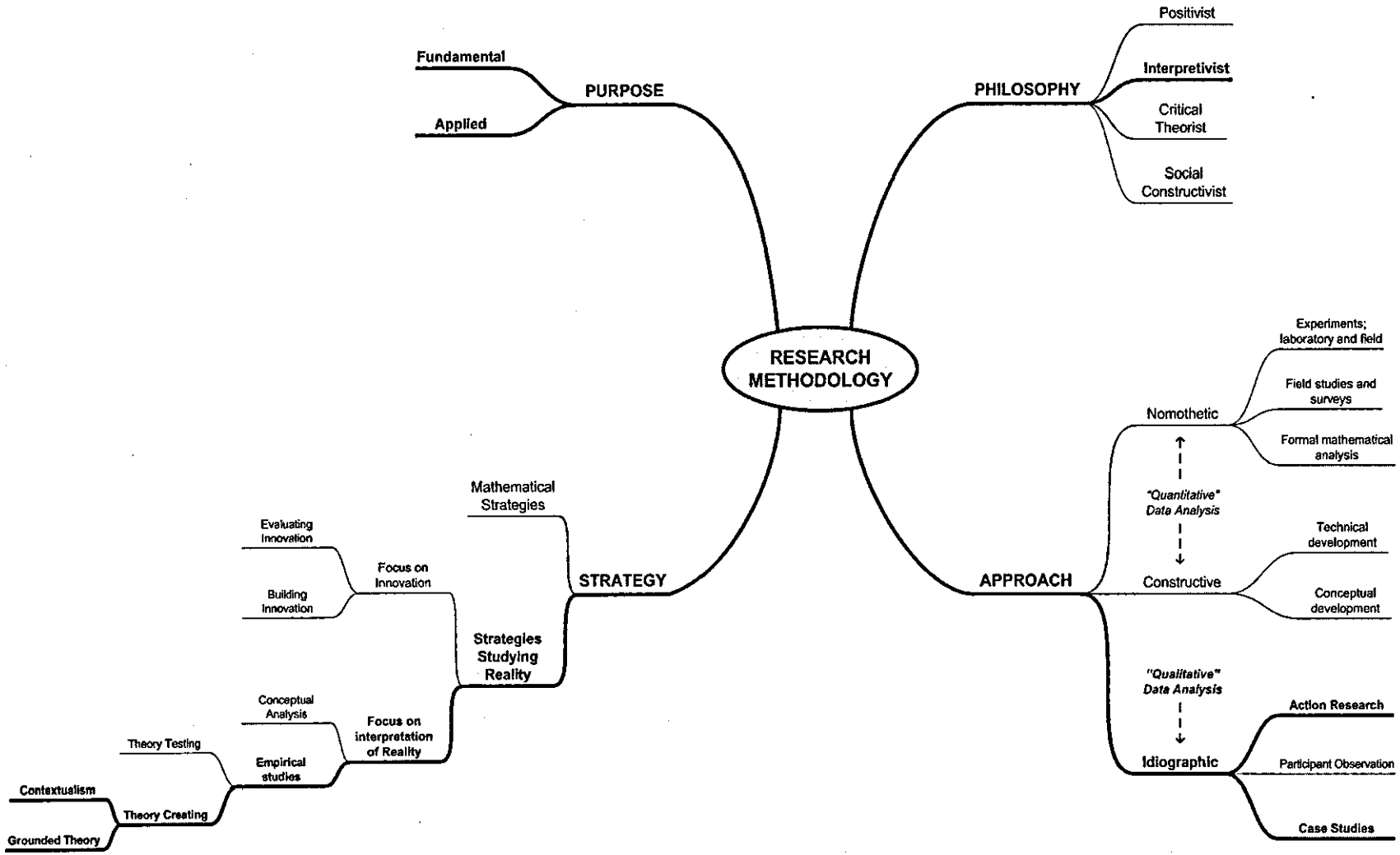


Figure 3.1: Mind map of research methodologies and choices for this thesis (in bold font)

## 3.2 Purpose of research

According to the particular purpose of carrying out a piece of research, it can be classified as either *Applied* or *Fundamental* (Sekaran, 2003). Applied research is undertaken to address a specific problem whereas fundamental research is carried out with the purpose of enriching an academic body of knowledge. Both of these types are relevant to the context of this research because the applied aspect will aim to deal with specific problems in industry, while the anticipated impact of the findings would also give a fundamental aspect on a wider scale.

## 3.3 Research philosophy

A research philosophy is a belief about the way in which data about a phenomenon should be gathered, analysed and used. The term "epistemology" (what is known to be true) as opposed to "doxology" (what is believed to be true) encompasses the various philosophies of research approach. The purpose of science, then, is the process of transforming things believed into things known: "doxa" to "episteme" (Jackson, 2001). The three most widely discussed and accepted philosophical approaches for research are *Positivist*, *Interpretivist* and *Critical* (Orlikowski and Baroudi, 1991; Wood-Harper, 1992; Myers, 1997; Klein and Myers, 1999; Shah, 2005; Wapakabulo-Thomas, 2006). However, there are quite a few authors that also highlight a fourth philosophical approach, namely *Social Constructivist* (e.g. Stringer, 1996; Healy and Perry, 2000; Makopoulou, 2008). All of these approaches will be discussed in the following sections.

### 3.3.1 Positivist (a.k.a. scientific)

The fundamental premise of the Positivist approach seems to be that observing or experiencing events in the real world can produce knowledge that is objective and unaffected by the passage of time. According to Popper (1959), all observations are measurable and repeatable and the correct analysis will lead to the "single truth". The pure Positivist approach is often preferred in "hard" sciences (e.g. mathematics, physics and engineering) and has been endorsed by many leading scholars in ancient and modern times.

Hirschheim (1985, cited in De Chazal 2003) highlights the debate on the suitability of the Positivist approach to social sciences, while Remenyi and Williams (1996) demonstrate the increasing demand for a more pluralistic approach.

The Positivist philosophy has not been identified as suitable for this research because there will be a large focus on the social science perspective of KM in industry.

Themistocleous (2002, cited in Wapakabulo-Thomas 2006) explains that the Positivist approach assumes that knowledge consists of facts that are independent. However, the literature highlights a wide variety of complex and interrelated organisational, cultural, social, political and technical factors that will surely affect any facts that can be discovered about KM during research. This provides further evidence of the unsuitability of the Positivist approach for this thesis.

Finally, the Positivist approach relies on large amounts of quantitative data whereas this study will primarily use qualitative data as the basis for analysis. The rationale behind this choice is explained in sections 3.4.2 and 3.4.3.

### 3.3.2 Critical theorist

According to Jackson (2001), the Critical research approach views reality in terms of its historical influences and the affects of power relationships. Such research aims to provide a social critique, surfacing restricting and alienating conditions in a particular situation through a focus on opposites, conflicts and contradictions. Makopoulou (2008) explains that Critical theory assumes the existence of multiple realities that are situated in historical, social, and cultural structures. The researcher holds the role of emancipator in employing the research process as a vehicle to elicit, liberate and transform research participants from their historical, cultural and social constraints, injustices or misunderstandings (Guba and Lincoln, 1994). In Critical thinking, the assumption is that people can consciously act to change their social conditions

and realize their potential (Alvesson and Wilmott, 1992; Klein and Myers, 1999). The research process itself is subject to political, ethical and ideological influences and needs to be read within the societal organisational climate in which it is carried out. The research methods used within a Critical approach should be selected with an awareness of their social consequences to maximize the potential of all those involved (Jackson, 1990).

The Critical research approach has not been deemed appropriate for this thesis because it seems to focus on wider social impact whereas the primary purpose of this research is to focus on specific organisational settings and the actions and experiences of participants of this study.

### 3.3.3 Social constructivist

According to Makopoulou (2008), Social Constructivism is a theoretical framework that assumes multiple socially constructed realities - i.e. that individuals and groups are deeply involved in constructing the social reality of which they are a part. Therefore, Social Constructivism holds that there is no one single reality; instead there are multiple truths that are situated in specific contexts and particular belief systems (Healy and Perry, 2000). Stringer (1996) explains that the aim of the Constructivist researcher is not to establish the 'truth' or to describe what 'really' is happening, but to reveal the different truths and realities held by different individuals and groups. In other words, Social Constructivism aims to construct an in-depth understanding of individual perceptions in interaction with the research participants (Makopoulou, 2008).

It could be argued that the Social Constructivist approach could offer a suitable framework for this research, due to the multiple socially constructed realities that exist in an industry environment. However, the Interpretivist approach seems more suitable for this research for reasons that will be explained in the following section.

### 3.3.4 Interpretivist (a.k.a. anti-Positivist)

Interpretivists contend that only through the subjective interpretation of and intervention in reality can reality be fully understood. Key to the Interpretivist philosophy is the study of phenomena in their natural environment together with the acknowledgement that scientists cannot avoid affecting those phenomena. They admit that there may be many interpretations of reality, but maintain that these interpretations are in themselves a part of the scientific knowledge they are pursuing (Jackson, 2001). In Interpretivism, researchers tend to allow concepts (constructs) to emerge from field data rather than entering the field with pre-conceived theories (Galliers, 1992; Miles and Huberman, 1994; Wapakabulo-Thomas, 2006).

Pure Interpretivists also tend to strongly oppose the Positivist approach and therefore are also known as "anti-Positivists". In 1979, Burrell and Morgan define anti-Positivists as a group of thinkers that refute some or all of the basic tenets of Positivist thought. De Chazal (2003) cites Kant (1781) and Hegel (1821) to explain that the notion of anti-positivism seems to originate from the hypothesis that it is impossible to know anything *a priori* about the world, as it is not independent of our cognitive apparatus. Our perception of an event, known as *phenomenon*, is separated from the event itself, known as *noumenon*. The recording of an event is a phenomenological act and therefore biased in the existence of the observer.

In 1999, Irani et al. explain that the Positivist approach dictates that the researcher takes the role of an observer, whilst the Interpretivist approach dictates that the researcher gains knowledge by participating in the subject of the empirical study.

The Interpretivist approach has been identified as the most appropriate philosophy to subscribe to for the purpose of this research. This choice is based on the fundamental premise that this research aims to create a KM methodology by developing and testing in "real world" industry settings, influencing those settings and observing the impact of that influence.

## 3.4 Research approach

There is a wide variety of research approaches in the literature that could be used as a framework to carry out the research for this thesis. The following list has been adapted from Myers (1997) and Wapakabulo-Thomas (2006):

- Focusing on developing frameworks or refining concepts (Constructive) versus focusing on the discovery of general laws (Nomothetic) versus focusing on the uniqueness of each situation (Idiographic)
- Qualitative versus Quantitative
- Objective versus Subjective
- Taking an Outsider versus an Insider perspective
- Aimed at prediction and control versus aimed at explanation and understanding.

The first two distinctions seem to be more commonly found in the literature and also seem to be interrelated. Therefore the focus of the rest of this section will be on these distinctions. The chosen research approach is demonstrated in Figure 3.2 and will be explained in the following sections.

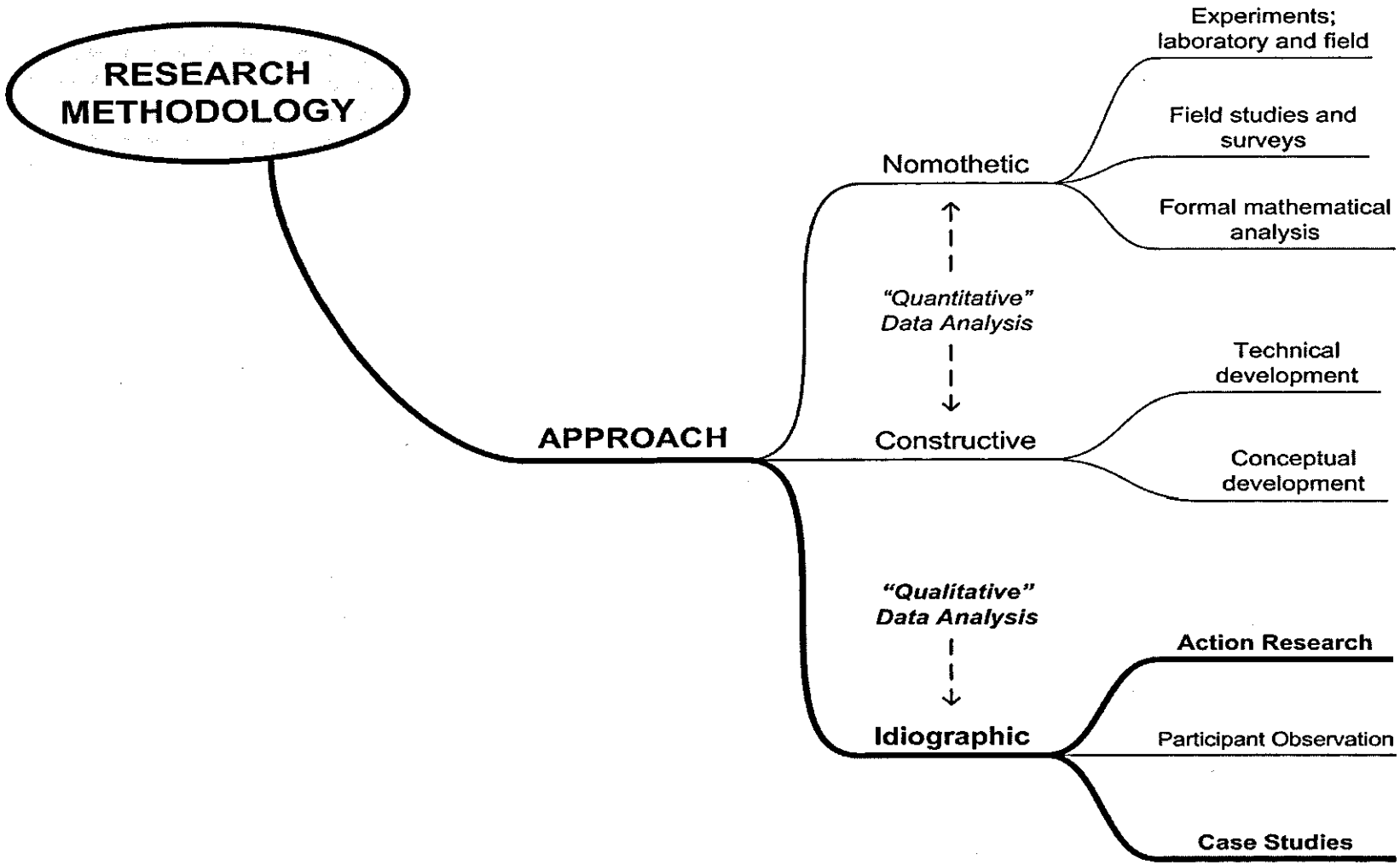


Figure 3.2: Chosen research approach (in bold font)

### 3.4.1 Constructive versus Nomothetic versus Idiographic

Based on definitions provided by Burrell and Morgan (1979), Iivari (1991) and Cornford and Smithson (1996) research approaches can be defined as:

- *Constructive research*, which is concerned with developing frameworks, refining concepts or pursuing technical developments. The approach allows models and frameworks to be created that do not describe any existing reality or do not necessarily have any "physical" realisation.

- *Nomothetic research*, which is concerned with exploring empirical data in order to test hypotheses of a general character about phenomena studied. Nomothetic research is concerned with a search for, and evidence to support, general laws or theories that will cover a whole class of cases. Such research emphasises systematic protocols and hypothesis testing within the scientific tradition.

- *Idiographic research*, which is concerned with exploring particular cases or events and providing the richest picture of what transpires. The aim is to understand a phenomenon in its own, particular, context – the essence of the Interpretivist approach. Idiographic research emphasizes the analysis of subjective accounts based on participation or close association with everyday events.

The Constructive approach does not seem like the appropriate choice for this thesis because the research is to be carried out in "real world" industry settings, as opposed to an "artificial" environment that would be created by the researcher.

The Nomothetic approach also does not seem like the appropriate choice because the creation of a rigid KM methodology would have to be so generic that it would be less likely to add value to the organisation applying it, as each organisation operates within its own particular circumstances. The Nomothetic approach could also be characterised as belonging to the Positivist philosophy.

Therefore the choice of this approach would be inconsistent with the decision to adopt the Interpretivist philosophy.

The Idiographic approach has been identified as the most appropriate option for this thesis because it is highly focused on participation. The amount of "subjectivity" that is present in this approach can, to a reasonable extent, be justified by the adoption of the Interpretivist philosophy. In addition, Cornford and Smithson (1996) explain that the Idiographic approach is the most suitable framework when planning to make extensive use of case studies, due to their non-restrictive variable approach.

### 3.4.2 Quantitative versus Qualitative

Quantitative research methods were originally developed in the natural sciences to study natural phenomena and qualitative research was developed in the social sciences to enable researchers to study social and cultural phenomena (Myers, 1997).

Quantitative research collects data that can be 'quantified' and measured precisely without being refuted. Such data allows hypotheses to be tested following the application of statistical techniques (Burgess, 2006). Qualitative data provides a richer more meaningful picture to the reader than pages of summarised numbers and can be described as a source of well-grounded, rich descriptions and explanations of processes in identifiable local contexts (Miles and Huberman, 1994; Burgess, 2006). Where measurement is sought then a quantitative approach is required; where rich and personal data are sought, then a word-based, qualitative approach might be more suitable (Cohen et al. 2007, cited in Makopoulou 2008).

On the one hand, quantitative studies "persuade" the reader through de-emphasising individual judgement and stressing the use of established procedures, leading to more precise and "generalisable" results. On the other hand, qualitative research persuades through rich depiction and strategic comparison across cases, thereby overcoming the 'abstraction inherent in

quantitative studies (Firestone 1987). Qualitative research is associated more with the Interpretive rather than the Positivist perspective and involves the use of methods such as interviews and participant observation to understand and explain phenomena (Burgess, 2006).

### 3.4.3 Combining Idiographic with Qualitative research

As previously mentioned in section 3.4.1, the Idiographic research approach has been identified as the most suitable to adopt in order to carry out the research for this thesis. However, it is also important to recognise that the distinction between quantitative and qualitative data analysis is of equal importance and not mutually exclusive with the distinction of the Constructive / Nomothetic / Idiographic approaches. In fact, these two distinctions could be combined.

It would appear that Constructive and Nomothetic approaches would be well supported by quantitative data analysis whilst the Idiographic approach is more likely to work effectively with qualitative data analysis. It is the latter combination that is proposed to be used for this thesis, as demonstrated in Figure 3.2.

## 3.5 Research strategy

Numerous publications were found in the literature that focus on approaches to research strategy, for example Iivari (1991), Galliers (1992), Alavi (1994), Yin (1994), Cavaye (1996), Remenyi and Williams (1996) and Järvinen (2001). Yin's (1994) classification of research strategies for empirical studies seems to have been widely adopted in the past. However, Järvinen (2001) finds Yin's approach somewhat limited, especially when compared to Iivari's (1991) classification of research strategies. Therefore, Järvinen (2001) proceeds to propose a hierarchy of research strategy groups, based on particular classifying principles, as demonstrated in Figure 3.3.

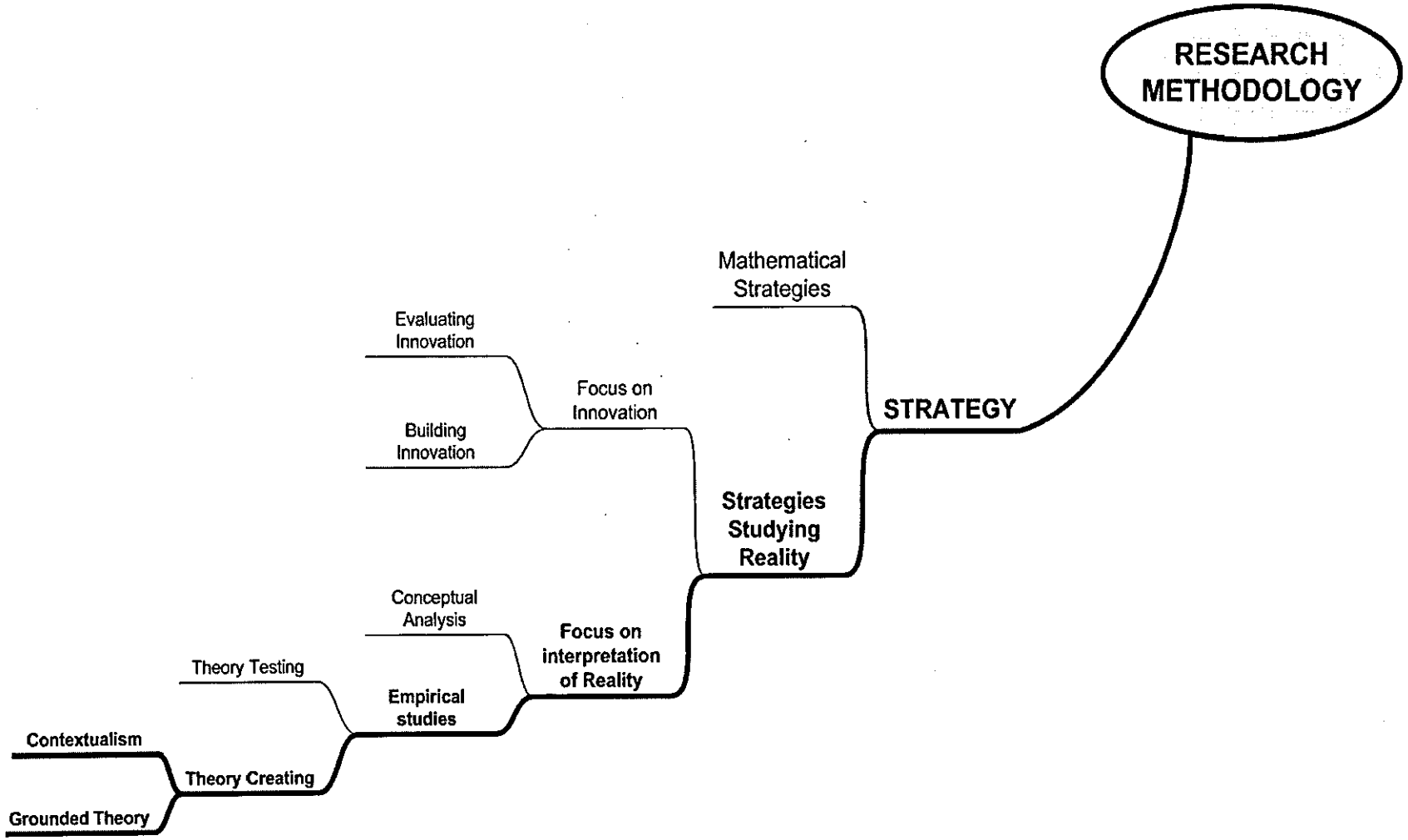


Figure 3.3: Chosen research strategy (in bold font)

The following definitions of research strategies have been adapted from Järvinen (2001) and De Chazal (2003):

- *Mathematical research strategies* attempt to prove or disprove a theorem, lemma or assertion.
- *Conceptual analytical strategies* analyse theories, models and frameworks that have been used previously in other empirical studies, study their underlying assumptions and then attempt to produce results that can be generalised.
- *Theory testing* attempts to test theories via such methods as laboratory experiments, field studies and some types of case studies.
- *Theory creating* appears to encompass all other strategies, e.g. standard case studies, grounded theory, contextualism, participant observation, action research, ethnographic methods, etc.

KM is not a mathematical concept and therefore the mathematical strategy is not relevant for this thesis. Conceptual analytical strategy is only partially relevant because, despite studying previous KM models in the literature, the focus will be on specific case studies in unique organisational settings. Theory testing could also be partially relevant due to the use of case studies and field testing, however the theory creating strategy seems more appropriate for this thesis because the primary research aim is to develop and evaluate an original methodology for KM.

## 3.6 Chosen research methodology

This chapter has demonstrated, so far, that the purpose of the research is both Applied and Fundamental, the chosen research philosophy is Interpretivist, the chosen research approach is Idiographic with qualitative data analysis and the chosen research strategy is Theory-creating empirical study. This combination of choices has led to contextualism and grounded theory as the key theoretical basis and action research and case studies as the key research tools. These choices have been demonstrated in Figure 3.1 and are discussed further in the following sections.

### 3.6.1 Contextualism

Järvinen (2001) defines the basic principles of contextualism as:

*1. The mutual nature of inquiry*

*2. The balance between the researcher's involvement and distance*

*3. The notion that knowledge is created through a process of making rather than discovered through a process of knowing*

*4. The importance of the situational and multifaceted character of meanings in research settings*

*5. The holistic study of emergent processes in particular and changing contexts.*

Earlier work by Schön (1983) highlights that practitioners demonstrate variation as well as constancy in their working patterns. Schön defines the constants as:

*1. The media, languages and frameworks that the practitioners use to describe reality and conduct experiments*

*2. The appreciative systems they bring to the problem definition, to inquiry development and evaluation, and reflective conversation*

*3. The overarching theories by which they make sense of phenomena*

*4. The role frames within which they set their tasks and define boundaries.*

It appears that there is a parallel between Schön's (1983) identification of the constants of practitioner research and Järvinen's (2001) definition of contextualism. Indeed, Pettigrew (1985) defines the parallel between Schön's (1983) work and contextualism as the *"situational nature of the inquiry"*. Pettigrew then continues to highlight the importance of understanding the emergent and situational features of a system within context and advises contextualist researchers to place themselves in a position where they can use a variety of data gathering techniques and act as consultants to the organisations being studied. The research for this thesis will be carried out in industry, with a significant focus on the particular context for applying KM in each case. Therefore the Contextualist approach seems like a suitable theoretical basis to adopt, along with grounded theory, which is discussed in the following section.

### 3.6.2 Grounded theory

Grounded theory is widely attributed to the pioneering work of Glaser and Strauss (1967), who argue that theories should be 'grounded' in an empirical reality, providing an iterative loop for theory, checking and refinement (Denscombe, 2002). Grounded theory could be described as a pragmatic approach to the analysis of qualitative data that aims to discover theory from data that can explain and understand the data (Pidgeon and Henwood 2004, cited in Makopoulou 2008).

In 1967, Glaser and Strauss highlight that grounded theory is based on the assumption, which is parallel to that made in contextualism, that research is carried out in variable settings and by researchers who apply their personal and professional qualities. Therefore, it would not be realistic to try and enforce a "standard" set of methodologies in every study. It is with this in mind that Glaser and Strauss also state that their intention is to present guidelines rather than an inflexible methodology that is to be strictly followed. Layder (1993) states that it is the flexibility of interpretation of ideas across a broad range of research approaches that yields the significant impact of grounded theory.

Strauss (1987) highlights that the analysis of qualitative data should be geared towards the generation of new concepts and theories. Denscombe (2002) agrees with Strauss and highlights that a researcher employing grounded theory should not set out to test a theory, but should instead approach the situation without a rigid set of ideas that shape what he or she focuses on during the investigation. Strauss (1987) describes this approach as *"a voyage of discovery"*. Given the fact that no assumptions are made, the selection of people, instances, and tools to be used will reflect the developing nature of the research and cannot be predicted at the start. The "voyage of discovery" will force the researcher to iteratively create, implement, and analyse new angles of investigation and enquiry. The lack of assumptions makes defining sample sizes somewhat difficult (De Chazal, 2003). Strauss (1987) deals with the problem of defining appropriate sample sizes with by developing the concept of "theoretical saturation". Essentially, this concept could be explained as the

researcher continuing to sample and analyse until reaching the point where analysis no longer contributes to further understanding of a phenomenon or situation.

Grounded theory usually involves a methodical approach to analysis of data, e.g. coding, memo writing, constant comparison, conceptual categories and theory building. Although the process of data analysis is frequently described in a linear fashion in order to facilitate understanding, in reality, researchers must move backwards and forward in these different steps in order to compare and contrast their interpretations of the data and gradually build, rework or refine the 'workable' theory (Glaser and Strauss, 1967).

Grounded theory seems like a very suitable approach to be adopted for this research, especially due to the dynamic and unpredictable nature of the various organisational settings in which the research is to take place. This is a choice that is consciously made, despite the fact that grounded theory has received some negative criticism. For example, Denscombe (2002) argues that grounded theory has been devalued because many researchers use it to justify their research methods without paying enough attention to the original ideas of Glaser and Strauss. Despite this criticism, the grounded theory approach is still considered very suitable in its original form. It is also worth mentioning that theoretical saturation is not expected to be achieved in this thesis, due to the unrealistic number of case studies that would need to be performed in a relatively short timeframe. Nevertheless, all efforts will be made to get as close as possible to theoretical saturation, within the time constraints of this research, before making recommendations for future research to complete the process as appropriate.

### 3.6.3 Action research

Rapoport (1970) defines Action Research as the method which aims to contribute both to the practical concerns of people in an immediate problematic situation and to goals of social science by joint collaboration within a mutually acceptable ethical framework. Jackson (2001) provides a similar definition by

describing Action Research as a form of applied research where the researcher attempts to develop results or a solution that is of practical value to the people with whom the researcher is working, at the same time developing theoretical knowledge. Through direct intervention in problems, the researcher aims to create practical outcomes while also aiming to inform existing theory in the domain studied.

Denscombe (2002) provides four defining characteristics of Action Research:

- *Practical* – aimed at dealing with real-world problems and issues, typically in work and organisational settings
- *Change* – Change is regarded as an integral part of the research, providing both a way of dealing with practical problems, and as a means of discovering more about an event.
- *Cyclical process* – the research involves a feedback loop to itself, in which initial findings generate possibilities for future investigation
- *Participation* – practitioners are crucial to the research program, and their participation is active not passive.

Action Research does not specify constraints by which data should be gathered, nor does it specify the analysis to be performed. Indeed, it seems to borrow from grounded theory a kind of pragmatism in approach, allowing a wide variety of different data and analyses to be performed (Susman and Evered, 1978; Denscombe, 2002).

Action Research is often considered as identical to Practitioner Research. This seems to be a mistaken belief because there are indeed some differences. In 1994, Edwards and Talbot argue that practitioner research can only be defined as action research when the professional conducting the research engages in frequent reviews and self-reflection on aspects of their own practice as they engage in that practice.

Boutilier et al. (1997) argue that Action Research differs from many other approaches because the researcher is considered to be the primary agent for change, often in partnership with others. Kemmis and McTaggart (1988, cited in De Chazal 2003) state that all actors involved in the research process are equal participants and must be involved at every stage of the research. Elliot (1991) disagrees and argues that there are cases where the responsibility for a successful outcome lies solely with the action researcher. Most action research lies somewhere between these two extremes (Denscombe, 2002).

Three cumulative levels of action research have been identified by Zuber-Skerritt (1996):

1. *Technical*: participants depend on the researcher as the key facilitator and the aim is to improve effectiveness of managerial practice
2. *Practical*: in addition to the characteristics of technical action research, aims to expand participants' knowledge and foster professional development
3. *Emancipating*: as practical, but also aims to achieve organisational transformation and improvement by expanding existing boundaries of performance.

The advantages and disadvantages of Action Research could be summarised as follows (adapted from Jackson, 2001, Denscombe, 2002 and De Chazal, 2003):

**Advantages of action research**

- Addresses practical problems
- Instigates positive change
- Gives personal benefits for the practitioner – professional development
- Gives benefits for the organisation through a continuous cycle of development and change via on-site research
- Involves participation in research from many actors

**Disadvantages of action research**

- The practitioner and organisational environment can limit the scope and potential scalability of the research
- The integration of research with practice limits feasibility of exercising controls over factors of relevance to the research
- The nature of the research is constrained by what is permissible and ethical within the workplace setting
- Ownership of the research process becomes contestable within the framework of the partnership
- The personal ethics of the researcher are critical, since the opportunity for direct intervention is ever present.

The advantages of Action Research seem to outweigh the disadvantages to a reasonable degree. Action Research, and more specifically the Emancipating type, has been identified as a very suitable method for this thesis due to the fact that the participating organisation will most likely expect to see real changes and benefits delivered as a result of their participation in the study. In addition, it has been stated in section 3.1 that the purpose of this research is both Fundamental and Applied, so Action Research is expected to make a significant contribution towards the latter.

### 3.6.4 Case studies

Case studies involve an attempt to describe relationships that exist in reality, very often in a single organisation. Case studies may be Positivist or Interpretivist in nature, depending on the approach of the researcher, the data collected and the analytical techniques employed (Jackson, 2001). It has been argued that case studies, as a methodological tool, offer the potential of gaining access to deeper insights about contexts, situations and experiences (Eisenhardt, 1989; Sturman, 1999).

There are numerous definitions of case studies available in the literature (e.g. Stone, 1978; Benbasat, 1984; Bonoma, 1985; Benbasat et al. 1987; Yin, 1994).

Jackson (2001) proposes a working definition, compiled from the aforementioned sources as well as other frequently cited sources:

*"A case study examines a phenomenon in its natural setting, employing multiple methods of data collection to gather information from one or a few entities (people, groups or organisations). The boundaries of the phenomenon are not clearly evident at the outset of the research and no experimental control or manipulation is used."*

As indicated in the definition above, case studies require multiple data collection methods in order to cross-reference the results and establish theory that is more likely to be valid. Yin (1994) identifies these methods as including:

- Direct observation of activities and phenomena and their environment
- Indirect observation or measurement of process-related phenomena
- Interviews –(structured or unstructured)
- Documentation, such as written, printed or electronic information about the company and its operations
- Records and charts about previous use of technology relevant to the case.

According to Makopoulou (2008), the crucial question in case study research that may seem trivial at first glance is: "what is the case"? According to Yin (1994), the "case" can be virtually anything; it can be an individual person, or a group of individuals, it can be a school or an organisation; it can be a programme, an innovation, an event, a concept, a general phenomenon, or a happening. Despite this apparent simplicity, there is still much controversy about what, precisely, a case study is, and what features are within or outside the boundaries of any specific case (Lincoln and Guba, 1985; Sturman, 1999; Stake, 2005). What seems to be undisputed is that each researcher must establish and clarify what is to be studied (Makopoulou, 2008). In the present study, the "case" is at the organisational level with the development and evaluation of an original KM methodology.

According to Benbasat et al. (1987), case studies are a viable option for three main reasons:

- It is necessary to study the phenomenon in its natural setting
- The researcher can ask "how" and "why" questions, so as to understand the nature and complexity of the processes taking place
- Research is being conducted in an area where few, if any, previous studies have been undertaken.

The main advantages and disadvantages of case studies can be summarised as follows (compiled and adapted from Galliers, 1992, Cornford and Smithson, 1996, Jackson, 2001 and Burgess, 2006):

**Advantages of case studies**

- Reality is captured in considerably greater detail than other approaches
- A higher-than-average number of variables is available for analysis
- The researcher is empowered to collect rich data by a number of means.

**Disadvantages of case studies**

- It is difficult to make generalisations or draw meaningful conclusions from a single case study
- Researchers may have different interpretations of the same data, thus adding the risk of bias.

There are numerous classifications of case studies in the literature, depending on the purpose of the research. Eisenhardt (1989) argued that case studies could be used to accomplish various aims: to provide description, test theory or generate theory. One of the most cited classifications is provided by Yin (1993, cited in Makopoulou 2008):

- *Exploratory* case studies aim at defining the questions and hypotheses of a subsequent study
- *Descriptive* case studies present a complete description of a phenomenon within its context

- *Explanatory* case studies present data bearing on cause-effect relationships-explaining which causes produced which effects.

Another popular classification seem to be that provided by Stake (2005):

- *Intrinsic* case studies are employed when the researcher has an inherent, intrinsic interest in, and seeks a better understanding of, a particular or unique 'case'
- *Instrumental* case studies are those where a case is examined with the aim of providing insights into something else; i.e. the phenomenon under investigation. In this type of research, although the case itself is of secondary interest, *"it is examined in depth, its context are scrutinized, and its ordinary activities are detailed to help the researcher to pursue the external interest"*
- *Multiple* or *Collective* case studies are instrumental studies extended to several cases. The researcher studies a number of cases in order to learn from these cases about a phenomenon, population or general condition.

It is worth noting that Stake saw these three categories as heuristic more than determinative since, as he argued, not all case studies can fit neatly into them (Makopoulou, 2008).

A key feature of the design of case study research is the number of case studies that can be included in a project. Generally speaking it is better, i.e. more valid and "generalisable", to include multiple cases, though there are instances where a single case is instructive (Lee, 1989; Jackson, 2001). Exploratory studies are generally better served by single cases, i.e. where there is no previous theory. A single case can also be used to test an existing, well-formed theory. Multiple cases are preferable when the purpose of the research is to describe phenomena, and to develop and test theories. Multiple cases also permit cross-case analysis, a necessary feature for widespread generalisation of theories (Jackson, 2001).

Jackson (2001) and De Chazal (2003) highlight that when deciding whether to use the case study approach or not, there are a number of factors to consider. If there is a need to focus on contemporary events or phenomena in a natural setting, clearly the case study is advantageous. The same is also true if there is no strong theoretical base for the research, i.e. if it is a theory building research project. A rich and natural setting can be fertile ground for generating theories (Benbasat et al. 1987).

The case study approach has been identified as very suitable for this thesis because it can support the development and evaluation of a new KM methodology in dynamic industry settings, where the boundaries are not clear from the start. It is also useful for theory building in topics, such as KM, which are in a relatively new area of research. As previously mentioned in section 2.2, KM has only been recognised as a discipline since the mid 1990's (Jennex, 2005; Gurteen, 2008). Furthermore, the aforementioned methods for data collection, such as direct and indirect observation, interviews, documentation etc. can all be arranged in the industry settings in which the research is to take place. Finally, based on the case study classifications discussed above, the most suitable approach to be adopted has been identified as *multiple descriptive case studies* in order to gather evidence from multiple sources and build a methodology that can be as generic as possible, within the time constraints of this research.

## 3.7 Summary

This chapter has presented a review of choices for following an appropriate research methodology. The key considerations are the purpose of the research, the research philosophy, the research strategy and the research approach. The purpose of this thesis has been identified as both Applied, because it aims to provide a solution to a specific problem, i.e. the KM needs of the participating organisations, and Fundamental because it also seeks to define guidelines that can be applied on a wider scale and inform KM theory. The research philosophy follows the Interpretivist roadmap because it will be very heavily based on interpretation of phenomena within "real world" industry settings. The research strategy will focus on studying and interpreting "reality" with the purpose of creating new theory. The research approach will be Idiographic while contextualism and grounded theory will underpin the methods used.

In summary, the primary research methodology to be used in this thesis will be action research case studies, in conjunction with qualitative analysis of data that will be gathered via interviews and direct observation in industry.

This chapter has addressed Objective 1.3 (*choose the most appropriate research methodology that needs to be applied in order to satisfy the research aim*). The following chapter focuses specifically on addressing Objective 2 (*conduct a pilot study into managing knowledge in industry*), while also making a contribution towards the achievement of Objective 3 (*design a goal-oriented KM methodology, based on ... as well as lessons learnt from the pilot study*).

# Chapter 4: Pilot Study of KM at Danwood

*"It isn't that they can't see the solution. It is that they can't see the problem."*

*** G. K. Chesterton ***

## 4.1 Introduction

This chapter is based on two papers by the author and his research supervisors (Balafas and Jackson, 2003; Dawson and Balafas, 2008) and describes the pilot study of KM at the Danwood Group, UK. The research undertaken used an action research approach as the author was employed by the company to carry out various project management tasks while actively taking part in the research project. This arrangement was made via the *Inside Industry Initiative*, a scheme setup by the author's research supervisors to facilitate the collaboration of Loughborough University with organisations in order to produce academic research, while simultaneously brining tangible benefits to the participating organisations. This arrangement enabled the examination of all aspects of Danwood's data and processes from an internal perspective and this eventually gave the opportunity to try new initiatives in the working environment.

It is commonly advocated that a first step to gauge the effectiveness of an organisation's information and knowledge strategy is to carry out a knowledge audit (Liebowitz et al., 2000). This should enable inefficient and ineffective knowledge and information mechanisms and processes to be identified and any shortfalls determined.

The main requirement of Danwood's senior management was initially to find ways of making improvements to business operations through KM. Therefore, a conventional knowledge audit was carried out with the aim of identifying opportunities for process improvement. The motivations for carrying out the knowledge audit were: to observe, in industry settings, the conventional approach to initiating KM; to identify potential improvements to this approach;

and to identify potential improvements to the particular Danwood processes that were being reviewed as part of the knowledge audit.

A knowledge audit was therefore carried out at Danwood and the result was that an area of inefficiency was indeed identified where two systems overlapped in their functionality. A proposal was put forward to the company to merge the two systems to create greater efficiency. The company board considered this proposal and accepted it in principle.

At first sight this had been a competent, systematic analysis of the KM supporting systems within the company, where a logical step-by-step methodology had produced a significant business improvement, and the author and one of his supervisors felt able to congratulate themselves and publicise their achievement (Balafas and Jackson, 2003). Unfortunately, the reality of the situation was not as expected. A follow up investigation showed that the change had never been funded and no employee or contractor had been assigned to carry out the software development necessary. The initiative had effectively been abandoned.

This disappointing result for an initiative, which had followed standard KM methods, led to the re-evaluation of the methods used in an effort to understand the problem and ensure this failure would not be repeated. In this respect, the pilot study was successful because a major flaw was discovered in the conventional approach to initiating KM.

It is worth noting that in section 2.2.3 it has been stated that technology is a support tool rather than the main driver of KM. However, in the context of this pilot study, knowledge sharing was hindered by poor *technology*, rather than *people* or *process*. Therefore, there is a strong focus on technology in this chapter, whereas the three main case studies of this research, which are presented in Chapter 6, Chapter 7 and Chapter 8, demonstrate a primary focus on the people and process aspects of KM.

## 4.2 Company profile: Danwood Group

Established in 1971, the Danwood Group is one of the largest independent suppliers of total office solutions in the UK and Ireland, with over 1000 employees in 32 regional sales and service centres (Danwood, 2008) and a turnover in excess of £120 million (Dover, 2008). Danwood's business support services span four core areas: consultancy, advice and guidance on print effectiveness and cost reduction; hardware, software and systems for the print, management, processing, storage and retrieval of documents; servicing and maintenance of equipment and systems; consumables for print, copy and fax technology (Danwood, 2008).

The Danwood Group comprises the following companies (Danwood, 2008):

- *Danwood Scotland, Danwood Highland and Danwood Ireland* are territory focused
- *Danwood Consumables* is an online print consumables business
- *Insatsu Chosa* is Danwood's print audit consultancy team, specialising in print cost reduction savings and improving efficiency across large organisations
- *Printware* sells desktop printers and consumables online or over the phone
- *Danwood Trade and Export* is the largest UK exporter of used photocopiers and provides new products, parts and consumables to markets worldwide.

Danwood's Service Division is an ISO-accredited National Authorised Service Provider that is responsible for the maintenance of 70,000 machines that produce in excess of 250 million prints per month (Danwood, 2008). Danwood benefits from strong business partnerships with established suppliers such as Sharp, HP, Ricoh, Panasonic and Konica Minolta for printing and copying products; and Inter-Tel Europe, Panasonic and Samsung for high-end telecommunications and networking products. Danwood also holds a strong client base in government, education and corporate sectors, e.g. Commonwealth Secretariat, DEFRA, The House of Commons, Loughborough University, Manchester University, Nottingham University, Cadbury Schweppes, Countrywide Assured Group and Huntsman Corporation (Danwood, 2004).

## 4.3 Early forms of KM at Danwood

Participant observation of Danwood's day-to-day operations revealed five business activities that could be linked to the concept of KM. These were: the Customer Relationship Management (CRM) system, the Customer Query Logging (CQL) system, a monthly "knowledge exchange" meeting in the IT department, an unofficial website that provided a technical forum for service engineers and a "hints and tips" bulletin for service engineers in a quarterly magazine. Each of these activities is discussed in the following sections.

### 4.3.1 Customer-focused KM systems

Customer Service at Danwood was initially supported by two IT systems: CRM and CQL. The CRM system had been developed in-house and had recently "gone live" as an Intranet-based solution that provided a support tool to Sales staff. The focus of the CRM system was on supplying knowledge about customers to sales managers in order to support business and marketing decisions. The CQL system stored information about customer queries that had been logged in the Customer Services department. The focus of the CQL system was on retrieving expert knowledge from sales and service staff in the field, in order to respond to customer enquiries at head office. However, Customer Services staff seemed unsatisfied with using the CQL system due to the lack of interactive and intuitive features that would support their business objectives.

### 4.3.2 Technical forum website

One of Danwood's Service Managers decided to setup and administer an external website by his own means. This website provided a technical forum for all Danwood engineers to exchange ideas on how to deal with technical problems when servicing photocopiers and printers. Interestingly, the website had not been advertised within the company and was discovered only by word of mouth. However, this initiative was abandoned after a short length of time due to a shortage of the founder's time and available resources.

### 4.3.3 "Hints and Tips" bulletin for service engineers - quarterly magazine

The "Hints and Tips" bulletin was a similar concept to the technical forum website that was discussed in section 4.3.2, but the initiative was centrally driven and the exchange of ideas was published in a quarterly magazine. This scheme was also abandoned mainly because the publications took too long to be produced, due to the slow process of gathering enough material to "justify" a publication. This also caused another problem – the content was often out-of-date or only relevant for a machine that was no longer on the market and had been replaced by a new machine (with new problems). There were also a high number of repeating hints being submitted which was an indicator of the lack of regular usage of the bulletin by the service engineer population.

### 4.3.4 "Knowledge Exchange" meetings

The "knowledge exchange" meetings were informal in nature and took place on a monthly basis in the IT department. Each month a member of the IT team would give a short presentation on their current work and especially in areas of individual expertise. An open forum discussion would usually follow. The main goal was to exchange knowledge to such a level that any critical technical operations could still be carried out by another member of the IT team in the absence of the relevant expert. It is worth noting that this scheme was abandoned within six months. The reasons given by members of the IT team were that they were running out of content to share (partially due to limited scope) and were also under a lot of pressure to focus on their daily activities and deadlines (short-term goals).

### 4.3.5 Conclusion on existing KM-related activities

The CRM and CQL systems, amongst the five KM-related business activities that were described in sections 4.3.1 through to 4.3.4, appeared to demonstrate the highest potential for improvement and positive impact at Danwood. The other three activities appeared to be of less significance, although it is worth noting that they had received less support and resource allocation and may become more important to Danwood in the future. Therefore, the pilot KM initiative at Danwood has focused on bringing process and system

improvements to CRM and CQL, starting with a knowledge audit, as described in the following section.

## 4.4 The pilot KM initiative at Danwood

As concluded in section 4.3.5, CRM and CQL have been identified as the most appropriate focal points for the pilot KM initiative at Danwood. As initially described in section 4.1, a knowledge audit is commonly advocated as a first step in a KM initiative and will, therefore, be the first topic to be discussed in this section. This will be followed by a description of the research methods chosen to carry out the knowledge audit in the context of analysing CRM and CQL. The cross-systems analysis of CRM and CQL is then described, followed by an analysis of their inefficiencies and the proposed solution: to integrate the systems into a single solution for customer relationship management at Danwood. Finally, the lack of actual implementation of the proposal is discussed, followed by a description of lessons learnt, a re-evaluation of the methods used and a recommendation for a new approach to initiating KM.

### 4.4.1 What is a knowledge audit?

A knowledge audit involves examining what explicit knowledge and information is held in documents and electronic systems and also the tacit knowledge and information held in the heads of employees (Burnett et al., 2004). The audit also concerns the identification of the capabilities of these systems and employees, and where and how the knowledge and information are used. Other aspects could concern the communication channels and flows of information and knowledge in an organisation (Dawson and Balafas, 2008). The first step in developing a KM system involves information discovery through completing a KM audit (Ray, 2008). The knowledge audit should reveal: information glut or lack of information; lack of awareness of information elsewhere in the organisation; inability to keep abreast of relevant information; significant reinventing the wheel; common use of out-of-date information; and not knowing where to go for expertise in a specific area (Liebowitz et al., 2000). These audits use questionnaires, surveys, interviews, and group discussions in order to

capture these sources of knowledge and information (Ray, 2008). However, in this pilot study it was not necessary to cover every possible aspect of a knowledge audit at the Danwood Group as a straightforward examination of the capabilities and information held in CRM and CQL was enough to highlight the overlap between these two systems.

### 4.4.2 Research methods used to perform the knowledge audit

The key method of capturing data for the knowledge audit was through interviewing members of staff within the Customer Services department. As the research was based at the company and the author was working within this department, interviews could be carried out using both informal as well as formal methods with some interviews being unstructured and some being structured. The first method employed was the use of unstructured, informal interviews. As the author was working alongside the users of CRM and CQL, colleagues were often asked about how they carried out their work and how the systems supported their role. This built a general appreciation and understanding of the functionality and use of the systems that could then be used to design a set of questions to carry out structured interviews. The initial informal interviews also helped to identify the principal customer liaison experts in the department that were later invited to participate in the structured interviews. However, the informal approach was used continuously throughout the research period, as it was often useful to seek clarification or seek expansion on points raised in earlier interviews. The informal approach also proved useful when trying to convey motives and solicit collaboration from colleagues by explaining how the research could lead to benefits for all employees working in the Customer Services area.

A second source of useful information was provided by attending strategic meetings within both the IT and Customer Services departments. The Danwood Group provided the author with "open access" to any meeting or seminar that was deemed beneficial for the research. It was discovered that networking with people from many areas of the business played a very important role, as it

provided a multi-angle view to shared problems and it gave a better insight into how a holistic solution could be designed.

A third source of data was the company documentation relating to the systems under investigation – CRM and CQL. System documents, such as user manuals, helped identify all the functionality of the systems and were particularly useful for identifying underutilised facilities. Other documents provided insight into the specific customer data that was being held, which helped identify how the systems were being used.

Despite the usefulness of the system documentation, there were cases where documents were out-of-date and no longer represented current working practices and the way in which users interacted with CRM and CQL. It was therefore necessary to observe/job shadow staff in Customer Services in order to understand how the systems were actually used on a day-to-day basis.

As diagrammatic representations of concepts can often form the basis for a better understanding, diagrams of the CRM and CQL system structures were produced. These diagrams were then presented to the system development team, as well as the system users, for review and amendment, in order to ensure an accurate diagrammatic representation of CRM and CQL.

### 4.4.3 Cross-systems' analysis of CRM and CQL

The CRM system at the Danwood Group, as with all CRM systems, served the purpose of keeping records of customer details and contacts to support the building of strong relationships with new and existing customers. The system was relatively new and functioned reasonably well in giving the functionality expected of it by the company agents using it.

The CQL system supported existing customers by logging and tracking any problems and queries customers had with the products or services they had purchased. Customer queries took, on average, two to five days to close, because resolving the problem involved identifying a suitable specialist who

then had to liaise with the customer. However, some of the more difficult problems could take a number of weeks to resolve. There were a number of immediate problems identified with this system as its use was mainly confined to logging the process. As the delays in responding to customers were often caused by the slow communication between staff in the company, it would have been useful if the system could have played its part in speeding up communications perhaps by highlighting where communication problems occurred and sending reminders where necessary. However, the system lacked any such proactive abilities.

The two systems clearly had an overlap in their data and functionality. Both had to record customer data and both recorded interaction with the customer, though the type of interaction was not the same. It was immediately obvious that the systems had enough in common to warrant an in depth analysis so this was carried out over a period of three months.

The first stage of the cross-system analysis of the CRM and CQL systems was to assess their current functionality in order to compare this to the functionality that was actually desired by Danwood and would best serve its business objectives. This "gap analysis" also confirmed that there was some commonality in the functionality of the two systems. In addition, it was important to identify what were the critical changes that needed to be made to both systems, while bearing in mind that a common glossary of terms had to be defined in order to avoid confusion about terms that may have different meanings in each system. The critical changes were identified firstly by examining any existing requirements that had been documented and secondly by interviewing staff in Customer Services. At the time of the pilot study, Danwood held a backlog of more than one hundred desired alterations to their IT systems, one third of which were related to the domain of customer relationship management. The interviews with staff also provided insight into desired functionality that had not been documented, based on the knowledge and expertise of those who worked on the "front-line" of customer service and had a more accurate notion of what features would be able to increase work efficiency.

The functionality analysis that took place pinpointed several weaknesses in the systems, especially in the case of CQL. It was therefore determined that CQL would have to be redesigned before being integrated with the CRM system. During the re-designing of CQL, any desired functionality that was already available in CRM was taken into consideration.

The main criticism of the CQL system, which was highlighted during interviews with ten members of Customer Services staff, was that it did not provide enough interactive features or significant reporting tools. If CQL were able to report the status of customer queries in a statistical manner, this would aid in highlighting potential problem areas within the business. More automation to be built into CQL in order to relieve staff members of unnecessary manual procedures was also high on the agenda.

### 4.4.4 The proposed solution

The analysis undertaken enabled the specification of improved systems for Danwood. Two phases of improvement were suggested. The first phase involved the specification of a new, enhanced version of the CQL system. Having taken into account the current structure of CQL, the user requirements for improvement and the available budget, the CQL system was redesigned and renamed, due to its revitalised functionality, to IQLS (Intelligent Query Logging System). The IQLS specification was informally presented to the Danwood IT Director, as well as to the system development team, all of which added their own input into how the system could be best implemented. A diagrammatic representation of the new IQLS concept is demonstrated in Figure 4.1, while the main data flow diagram of the software solution is represented in Figure 4.2.

In the new IQLS system, a typical scenario for dealing with a customer query would be:

1. Customer Services person logs the customer query that they have just received on the phone.
2. IQLS sends an automated problem specification message to the Sales or Service person responsible for the customer account.

3. Should there be no response within a defined timeframe (e.g. 3 working days), IQLS would generate another automated reminder message to be sent to the same member of staff.
4. If once again there is no response within a given timeframe (e.g. 7 working days), IQLS could also generate an automated priority message to be sent to the corresponding line manager, who can investigate the issue further.

In most cases it would be expected that the line manager would not have to get involved. However, if a line manager does receive a priority message from IQLS, this could raise the flag for problems such as staff absence or workload that may require urgent resource reallocation.

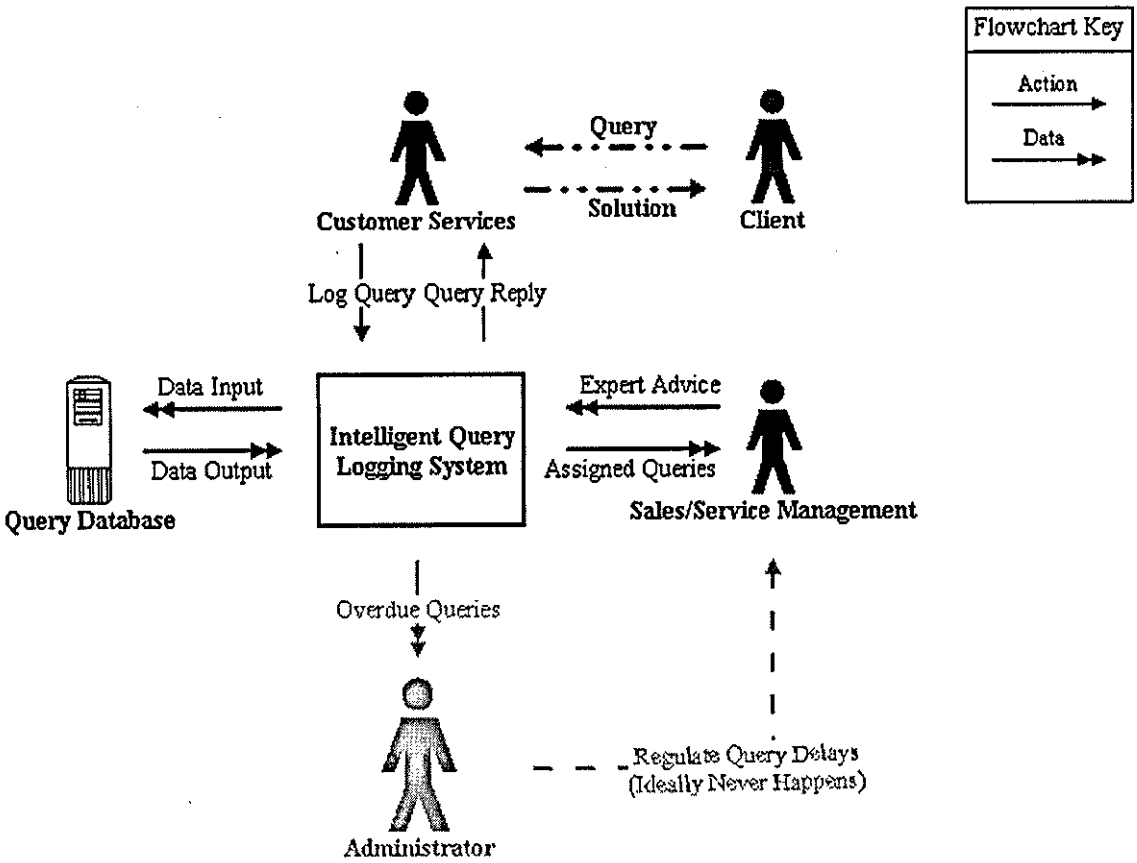


Figure 4.1: The IQLS concept diagram

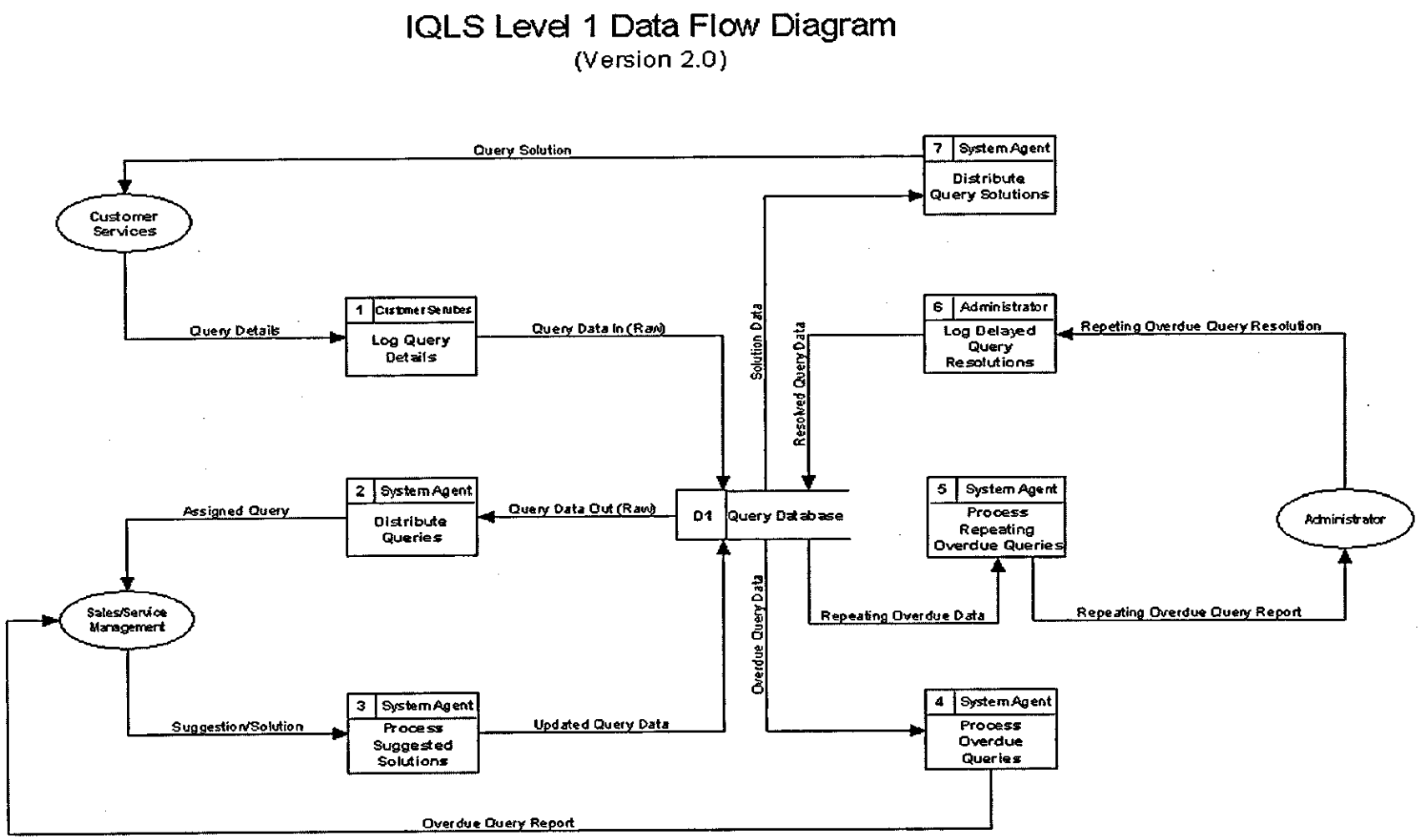


Figure 4.2: The IQLS Main Data Flow Diagram

Some of the improvements that IQLS was expected to bring in comparison to CQL were:

- Increased automation and therefore savings in terms of man-hours
- Better reporting facilities to take advantage of all the query data
- Increased cash flow as staff members in Customer Services will have more time to chase debts
- Increased customer satisfaction due to faster response times.

The new IQLS system could be applied at numerous levels of monitoring in order to be able to adapt to the changing requirements of an organisation. Ideally, the system would eventually act as a form of "benchmarking" and could also generate league tables with average response times that would enable problem areas to be identified with possible resource implications. The primary goal of IQLS was to act as a shared resource for logging and responding to queries, with many actions being automated by its own in-built "intelligence".

The second phase of suggested improvements was the merging of CRM and IQLS (formerly CQL). This seemed like a sensible choice and a logical next stage of KM development because both systems had been created to serve a common purpose – to support customer relationship management. After performing the analysis on the two systems it was determined that by connecting them together, the resultant "hybrid" system would form the holistic solution that the Danwood Group required, as all the functionality and essential customer information would be available through a single, centralised system. In addition, there were also some additional, practical motivations for integration: reducing the overall cost of developing and maintaining the systems; reducing the risk of functionality overlap/conflict; and reducing data repetition.

The merging of CRM and IQLS would require a major investment of effort to develop and implement the new system in a smooth switchover that would not have any negative impact on the users in the Customer Services department. As can be expected in any commercial environment, the size of the investment

required justification.

Ideally, to demonstrate return on investment, quantitative metrics that demonstrate the effect of improved systems on an organisation's business success are often sought. However, these metrics would need to focus on defining values for the intangible as well as the tangible benefits that can result from the implementation. In this pilot study, tangible benefits, such as increase in revenue and profit levels, and cost cutting in man-hours and product costs, were not available, as the values after implementation were not expected to be available to compare with the values before implementation, as the initial period of research activity with Danwood was only planned for three months (it was only after this initial "trial period" that Danwood's management agreed to fully sponsor the research for three years). The intangible benefits, such as improved customer satisfaction, staff job satisfaction, quality improvement, enhanced confidence, future business, teamwork and intellectual capital, that organisations need to maintain competitive advantage were also not available for the same reason. To overcome this problem, benchmark figures were identified for the tangible benefits, such as revenue and man-hours used, and surveys were designed to attempt to give some qualitative value to many of the intangible benefits based on the users ratings of aspects such as customer satisfaction. These metrics could then be collected both before and after the systems improvements were implemented to enable a full evaluation of the return on investment to be determined. Unfortunately, this evaluation could only take place after the improvement implementation, so the business case for the improvements put to the company board had to rely on rather speculative projections for the return on investment.

Despite the lack of concrete figures to show a return on investment, the logic of the proposals put forward was clear, with the identified duplication of data and the overlap in functionality between CRM and IQLS being clearly undesirable features of the current systems. Indeed, Danwood's senior management had no problem in seeing this logic and they accepted the changes suggested - in principle. The author and his supervisors were obviously pleased that their

efforts in the pilot study had yielded such an early success and turned to other aspects of the research at the company with enthusiasm.

### 4.4.5 The problem

The fact that the opportunity arose to continue to work and carry out research at Danwood beyond the original agreed period of three months was, perhaps, fortunate, as it was possible to observe the longer-term effects of the CRM-IQLS merger proposal. The problem was that, in essence, the effects were non-existent. As time progressed it became clear that the success of this initial research was not as it first seemed. Although the company had accepted the proposals in principle, it never approved the funding to carry out the changes required and no employee or contractor was ever assigned the task of implementing the changes. Eventually it became clear that the proposals had, in effect, been abandoned.

This outcome was a surprise and indeed an important reality check. For the proposals to be abandoned amounted to a failure of the pilot study to produce something of significant value to the organisation. What had gone wrong? If the company had accepted the value of the proposals, why did the company not follow through with the implementation? This problem led to a re-evaluation of the whole research approach and an investigation into why an apparent project success had turned into such a clear failure.

The first aspect examined was the author's own role in working with the company. Had Danwood simply lost faith in the author and his supervisors and had become no longer interested in their ideas? Fortunately the continued work carried out at Danwood showed that this was not the case. Indeed, the company continued to be very supportive of the work undertaken, showing interest in the research and the ideas generated. Therefore, this was not identified as the cause of the problem.

The fact that the author continued to be employed by the Danwood Group proved to be invaluable in getting to the bottom of the problem encountered.

Informal discussions took place with colleagues at all levels from the lowest level employee up to the directors. This close contact with the company meant that information could be acquired without the problem becoming a major issue. This method of gathering information proved to be very successful and before long a full picture began to emerge showing why the proposed changes had not been implemented.

### 4.4.6 Key learnings from the failed KM initiative

There were a number of reasons discovered for the lack of implementation of the proposed changes:

The Danwood Group is not adverse to change. On the contrary, it is a dynamic, forward-looking company and hence its involvement with Loughborough University to carry out research on KM and process improvement. However, this does present problems as, at the time the proposals were made, there was, as previously mentioned in section 4.4.3, a backlog of over one hundred IT change requests waiting for action at the company. While this would account for some delay, it would not cause the change to be abandoned completely. Further enquiries showed that the proposals put forward were designated the lowest priority. This had the effect that, in a dynamic company where improvements are continually being requested, the proposal would be unlikely to ever rise up the list of outstanding tasks far enough for action to be taken. There was always a task deemed more important. This does explain why the proposals were never implemented, but it does not explain why they were not considered important enough to be designated a higher priority.

There appeared to be a negative attitude towards KM. Some of the senior management team regarded KM to be little more than a fad. The problem is that the term "KM" is often surrounded by hype (Malhotra, 1998) and can sometimes be the subject of exaggerated claims that it is "essential for survival", the "key to prosperity" or that it will "revolutionise a business". Senior managers at Danwood had heard such claims before and had often been disappointed by the actual outcomes of previous initiatives. An example would be the hype that once

surrounded TQM (Total Quality Management) (Kemp, 2006). In reality, total quality management has not gone away, but rather, many of its ideas and principles are now incorporated into most companies' standard procedures. This means that, despite the common use of its philosophy, the term "TQM" is not used as often today and certainly the hype that surrounded it has faded away. The same could well happen to KM as its ideas are accepted and internalised, the term could eventually become less prominent. Despite the reality, therefore, it is very possible for managers to mistakenly view these initiatives as a fad. In the case of the proposals made at the Danwood Group, this phenomenon may account for the proposals having been received less enthusiastically than would have occurred if they had not been described as "KM proposals". In practice, however, the KM terminology had not been over stressed and the proposals were generally seen as being an effort for process improvement. Therefore, the attitudes to KM did not seem to really account for the low priority status that the proposals obtained. Nevertheless, this finding did ensure that the author and his supervisors were more careful with the use of terminology in future collaboration with the company.

The fact that it had not been possible to put figures on the return on investment for the CRM-IQLS proposal had clearly reduced the enthusiasm for the changes required. Although attempts were made to obtain "fully costed" details of the expected returns, these counted for little at the time of requesting funding, as the cost estimates were simply not available. The lesson from this is simple: a means has to be found to show some form of payback for an investment while it is still in the planning stage, regardless of how difficult it might be to achieve this.

All the above problems, however, faded in significance when compared with the main reason found for the research proposal's failure. The main reason found was simply that the company did not "own" the problem. They had been unaware that they had a problem before the knowledge audit and analysis was carried out and, although they could see the logic of the resulting proposals, they also knew that it had not stopped the company from functioning. Although

the Customer Services department encountered some inconvenience in using the two current systems, they were still able to undertake their work and had far more urgent and significant problems to attend to than this inconvenience. No one from the company was inspired enough to champion the changes required. From their point of view, like any senior manager, they had many problems to deal with but could not see that they were solving any of these with the CRM-IQLS merger proposal, so why should they invest in it?

### 4.4.7 The resulting new approach

It was interesting to note that the only part of the proposal that was, in due course, acted on, were the relatively minor upgrades to the CQL system to turn it into the IQLS system. This had suffered the same disadvantages of having to compete with over one hundred other IT change requests, being labelled a "KM" improvement and having no figures for a return on investment. The difference was that the users in the Customer Services department recognised that the system did not fully match their needs and therefore wanted some improvements to that system before the research project was ever undertaken. In other words, they "owned" the problem, they had already "bought in" to changes being made and were prepared to apply pressure to get the necessary changes financed.

This experience led to a questioning of the starting point of the research, the knowledge audit. The objective of the audit was to identify inefficiency and ineffectiveness and, potentially, to identify ways to address these problems. However, every organisation has its problems and most employees will be aware of at least one aspect of the company processes that inconveniences them or hinders them in some way. These are the problems that the workforce understands and recognises and it is for these that they want to see some form of solution. Why then, should an initiative start with an activity to look for other problems? It was concluded, therefore, that the starting point for such research should be a problem audit rather than a knowledge audit. The first step should be to talk to employees to discover what problems are giving them concern and the extent that these problems are impacting employees and the company as a

whole. Those problems with the greatest impact should then be the focus for improvement. This key observation is one of the cornerstones of Goal-Oriented KM (GOKM), which is presented in Chapter 5.

## 4.5 Summary

The pilot study at Danwood helped to identify some of the existing KM activities that were demonstrated in the use of the CQL and CRM systems. To be more specific, the use of the CRM system indicated an early form of customer-focused KM and the CQL/IQLS system demonstrated a basic expertise-locating system. A standard pattern of audit, analysis and system design initially appeared to be successful, but an unwillingness of the company to prioritise the proposed changes eventually led to the failure of the initiative. Reflection on the project outcome led to further research into the reasons for the failure and a re-evaluation of the approach taken. In this respect, the close working relationship with the company proved invaluable as it enabled informal enquiries to be made about the reasons for failure without the problem being seen as a major issue. This gave a much better insight into the reasons behind the failure, underlining the appropriateness of the action research approach taken.

It was concluded that the initial starting point of a knowledge audit was not appropriate and that it was better to start with a "problem audit" to identify what problems were of particular concern to managers in an organisation. This is the basis of the Goal-Oriented KM methodology, which is presented in Chapter 5.

This chapter has addressed Objective 2 (*conduct a pilot study into managing knowledge in industry*), while also making a contribution towards the achievement of Objective 3 (*design a goal-oriented KM methodology, based on ... as well as lessons learnt from the pilot study*), which is fully addressed in the following chapter. In addition, Objective 1.2 (*identify key success factors and barriers for effective KM implementations*) is also addressed in the following chapter.

# Chapter 5: Design of Goal-Oriented KM (GOKM) Methodology

*"Knowledge is not very productive unless it moves in response to an issue, a problem or an opportunity. Then, it can create magic."*

*** Bob Buckman ***

## 5.1 Chapter overview

The literature review (Chapter 2) as well as the pilot study at Danwood (Chapter 4) revealed the need for further research into goal-oriented KM in industry – especially one that can cope with both strategic as well as operational goals. Therefore, the fundamental aim of this research is to develop and evaluate a novel goal-oriented KM methodology in industry. This chapter presents the Goal-Oriented KM (GOKM) methodology. The three key influencers that shape this methodology are: the review of existing KM approaches that demonstrate goal-oriented thinking (Chapter 2), the pilot KM study that was carried out at Danwood (Chapter 4) and the review of factors that influence KM (Chapter 5). In addition, the special importance of the relationship between KM and organisational culture is also discussed.

## 5.2 Factors that influence KM

It was deemed important to study the literature in order to identify the key categories of factors that influence KM as well as the key enablers that ensure a successful KM implementation. In order to achieve this, a wide variety of papers were reviewed, both theoretical and applied, which had a special focus on KM success factors as well as barriers. A comparison and cross-reference of these papers was then performed, in order to produce a more holistic view of the factors that influence KM. In some cases, particular attention had to be given to terminology, as many authors used different terms to describe similar notions. For the purpose of consistency, a term has been proposed for each factor identified. The results of this analysis are presented in three tables. Table 5.1 presents eleven general categories of factors that influence KM, while tables 5.2

and 5.3 present sixteen KM enablers that have been derived from the analysis of success factors and barriers.

| APQC (1999) | Holsapple and Joshi (2000) | Hasanali (2002) | Wong (2005) | Lehner et al. (2008) | Author's proposed term |
|---|---|---|---|---|---|
| strategy | | | strategy and purpose | application of knowledge | **goals & priorities** |
| leadership | leadership | leadership | management leadership and support | top management support, communications | **leadership & sponsorship** |
| culture | culture | culture | culture | enterprise culture, social networks and relationships | **organisational culture** |
| | organizational adjustments | structure, roles and responsibilities | organisational infrastructure | delegation and participation | **organisational structure** |
| | coordination & control | | processes and activities | architecture of KM processes | **organisational processes** |
| technology | technology | IT infrastructures | IT | information and communications technology, KM systems | **IT support for KM** |
| measurement | measurement | measurement | measurement | | **performance measurement** |
| | knowledge, human, material and financial resources | | resources | | **resources** |
| | | | HRM, training and education | personal development | **HR management & development** |
| | employee motivation | | motivational aids | employee motivation | **motivational aids for knowledge sharing** |
| | external factors: competition, markets, governmental and economic climates | | | external conditions | **external conditions** |

Table 5.1: General categories of factors that influence KM

| Skyrme and Amidon (1997) | Davenport et al. (1998) | Liebowitz (1999) | Carrillo et al. (2004) | Chinowsky & Carrillo (2007) | Horner-Reich (2007) | Bishop et al. (2008) | Chang et al. (2008) | Lehner et al. 2008 | Wildner (2008) | **Author's proposed term for KM enabler** |
|---|---|---|---|---|---|---|---|---|---|---|
| *compelling vision and architecture, strong link to a business imperative* | *clear purpose* | *KM strategy* | | lack of focus | | lack of knowledge vision, lack of a clear purpose, *defining KM, establishing the right focus for KM, integrating with the organization* | *organizational goals, objectives and priorities* | *linkage of KM targets to the strategic targets of the enterprise, shared vision* | lack of systematic approach, dominant operational (rather than strategic) focus | **clear goals (strategic or operational) for KM** |
| *knowledge leadership* | *senior management support* | *a chief knowledge officer (CKO) or equivalent with support from senior leadership* | | | | *designated manager for the KM initiative, or "KM champion", top-level support* | *leadership style, top management support & commitment* | *senior support for KM, communication of KM strategies and targets, clarity of accountability for KM at all levels of the organisation* | | **KM leadership & sponsorship** |
| *knowledge creating and sharing culture* | *knowledge-friendly culture* | *a supportive culture* | organizational culture | organizational culture | | lack of information sharing culture and climate, *creating the right environment for knowledge sharing* | *organisational core values* | *culture of mutual trust and knowledge sharing, tolerance for learning from mistakes* | | **KM-friendly culture** |
| | | | | | volatility in governance | inflexible organisational structures | | *adequate empowerment for employees to undertake KM activities* | dominant role of managers/owners | **organisational structure that is conducive to KM** |
| *systematic organisational knowledge processes* | *standard and flexible knowledge structure* | *KM infrastructure* | lack of standard work processes | lack of standard work processes | | inadequate standardised processes | *critical knowledge for the organization must be identified* | *standardized, systemic knowledge processes are defined, integration of knowledge activities into essential work processes* | low standardisation and formalisation | **integrated knowledge & business processes** |
| *continuous learning* | *multiple channels for knowledge transfer* | | | | problems in integrating and transferring knowledge, failure to learn from past projects | | | *institutionalised KM, access to new knowledge, exchange of knowledge in the network is sufficiently possible* | preservation of knowledge is unstructured | **embedded infrastructure for transfer & integration of knowledge** |
| *well-developed technology infrastructure* | *technical and organisational infrastructure* | *KM systems and tools* | poor IT infrastructure | poor IT infrastructure | | | | *suitable and user-friendly KM information technology is present* | | **KM-focused IT infrastructure** |
| | *linking KM to economic performance or industry value* | | | poor business case financial benefits | | lack of appreciation of knowledge as asset, inappropriate methods for valuing knowledge, *demonstrating benefits* | | *awareness/understanding of the utility of KM, KM activities are regularly benchmarked internally and externally* | | **clear business case for KM initiative with regular performance reporting** |

Table 5.2: Key KM enablers (part 1 of 2) – derived from success factors (in italic font) and barriers (underlined)

| Skyrme and Amidon (1997) | Davenport et al. (1998) | Liebowitz (1999) | Carrillo et al. (2004) | Chinowsky & Carrillo (2007) | Horner-Reich (2007) | Bishop et al. (2008) | Chang et al. (2008) | Lehner et al. 2008 | Wildner (2008) | **Author's proposed term for KM enabler** |
|---|---|---|---|---|---|---|---|---|---|---|
| | | | lack of finance | lack of finance | | *allocation of sufficient resources and funds* | | *sufficient funding for KM activities* | | **secure funding via demonstration of business case to senior management** |
| | | | not enough time | not enough time | | time constraints | | *free time to engage in KM activities* | lack of time | **"making time for KM" (by aligning to business goals and with help of motivational aids)** |
| | | | | unstable workforce | competence of the project team | fear of the use of IT for KM (technophobia), *gaining workforce commitment, recognition of the behavioural types of those involved* | *core competence* | *sufficient qualifications for interaction with technology of KM activities* | lack of management skills, lack of human resources for KM | **KM-focused HR resourcing, management & development** |
| | *change in motivational practices* | *incentives to encourage knowledge sharing* | employee resistance | employee resistance | | "knowledge is power syndrome", *ensuring that the staff members recognise the value of KM, rewards for knowledge sharing* | | *employees are motivated towards knowledge transfer and sharing, e.g. through quickly visible success, suggestion schemes* | | **proactively managed motivational aids for KM** |
| | | | | | | pressure on knowledge "experts" | | *direct communication and knowledge exchange for collaborative problem solving* | few experts have the know-how | **proactive management of "key-man" dependencies** |
| | *clear language* | *knowledge ontologies and repositories* | | | | lack of shared language and communication | | | | **integration of KM ontology with organisational language** |
| | | | | | lack of a knowledge map | | | | | **production of knowledge map, where appropriate** |
| | | | | | | | *project feasibility* | | | **KM project feasibility check** |

Table 5.3: Key KM enablers (part 2 of 2) – derived from success factors (in italic font) and barriers (underlined)

Seven out of the eleven categories of KM factors have been previously discussed in Chapter 2 and Chapter 4. These are namely: *goals and priorities, leadership and sponsorship, organisational structure, organisational processes, IT support for KM, performance measurement* and availability of *resources.*

*Organisational culture* has been highlighted by many authors as one of the most significant KM factors (e.g. Chase, 1997a; Davenport et al., 1998; Pan and Scarbrough, 1998; Liebowitz, 1999; Martensson 2000, cited in Wong 2005; Hammer et al. 2004, cited in Shaw et al. 2007) and will be discussed further in section 5.3.

*HR management and development* has an important role to play in successfully implementing KM. Many authors have highlighted the significance of the relationship between HRM and KM (e.g. Brelade and Harman, 2000; Garavan et al., 2000; Robertson and Hammersley, 2000; Soliman and Spooner, 2000; Chang et al., 2008; Lehner et al., 2008; Wildner, 2008). While it is vital to KM for many reasons, the main focus is on the issues of employee recruitment, development and retention. Training and education is another important consideration for successful KM. In a basic sense, organisational members need to be aware of the needs to manage knowledge and to recognise it as a key resource for the viability of a company. Training for individuals to understand their new roles for performing knowledge-oriented tasks might be needed (Wong, 2005). An example of this is presented in Chapter 6. Another central issue in KM is how to retain knowledge and prevent it from being lost (Wong, 2005). This will be specifically addressed in Chapter 7.

Finally, many authors have highlighted *motivational aids for knowledge sharing* as a significant catalyst for KM success (e.g. Davenport et al., 1998; Liebowitz, 1999; Holsapple and Joshi, 2000; Bishop et al., 2008; Lehner et al., 2008). If individuals are not motivated to practise KM, no amount of investment, infrastructure and technological intervention will make it effective. Hence, one of the important factors is to establish the right incentives, rewards or motivational aids to encourage people to share and apply knowledge (Wong, 2005). In order

to gain enthusiasm for KM, staff will want to see that their knowledge contributions have been acknowledged and rewarded, through financial or non-financial means. However, some authors have advised against financial rewards, recommending intangible rewards instead, such as peer recognition, learning opportunities and greater autonomy (Bishop et al., 2008). Yahya and Goh (2002) state that such systems should reward risk-taking attitudes and emphasise group-based compensation. In particular, rewarding employees with a focus on group performance will instigate a higher level of knowledge exchange between them. In addition, approaches to motivate employees and recognise their contributions could also be tied to their annual job performance review (Wong, 2005). This implies treating KM practices as important criteria in evaluation (e.g. Buckman, 1998; Trussler, 1998;). The development and application of motivational aids for knowledge sharing will be discussed further in Chapter 6.

As highlighted by Holsapple and Joshi (2000) and Lehner et al. (2008), *external conditions* such as competition, markets and governmental / economic climates can influence the success of a KM initiative. It would perhaps be unreasonable to expect a KM methodology to be able to influence external conditions, however it would seem sensible to take them into consideration when prioritising KM efforts.

## 5.3 The impact of organisational culture on KM: Adapt KM to culture or vice versa?

This section is partially based on a paper by the author and his supervisors (Balafas, Jackson and Dawson, 2004b) and focuses on the impact of organisational culture on the design and implementation of KM.

According to Wong (2005) organisational culture defines the core beliefs, values, norms and social customs that govern the way individuals act and behave in an organisation. In general, a culture supportive of KM is one that

highly values knowledge and encourages its creation, sharing and application. Janz and Prasarnphanich (2003) explain that organisational culture is believed to be the most significant input to effective KM and organisational learning in that corporate culture determines values, beliefs, and work systems that could encourage or impede learning (knowledge creation) as well as knowledge sharing (e.g. Alavi and Leidner, 2001; Gold et al., 2001; Leonard, 1995; Slater and Narver, 1995), and ultimately, decision making (Kettinger and Grover, 1995; Schein, 1985).

Jashapara (2004) also recognises the fundamental impact that organisational culture has on the deployment of KM and that it is, therefore essential to provide an assessment and, if possible, to identify which broad category it belongs to. He explains that these categories are classifications for different configurations of culture found in organisations, but also that it is not expected that organisations will necessarily fall into one of these idealised types. However, these characteristics may help organisations to understand their social environments. Jashapara seems to favour Handy's (1985) typology of organisational culture:

*Power culture* is characterised as a web with a person or small group of people at the centre. There are few rules and people tend to act politically and are more concerned about ends rather than means. Such organisations can react quickly to environmental changes but may suffer from high turnover rates if suitable people are not recruited.

*Role culture* is characterised by bureaucracy where rules, procedures and job descriptions tend to predominate. These organisations are successful in stable environments but may have difficulties adapting to more turbulent environments.

*Task culture* is characterised by project or matrix organisations that bring together the appropriate resources and competence required for effective team functioning. Mutual respect is based on ability rather than status or age. These cultures can be highly effective for innovative projects but are less successful where there is an emphasis on cost rationalisation and economies of scale.

*Person culture* is characterised by individual autonomy and collective action based on fulfilling individual self-interests. Individuals decide on their work allocations rather than a central body. Examples of person cultures may be found in academia, among architects or barristers.

There are numerous methods for assessing organisational culture. Some of the most commonly used are survey-based and fall into the following two categories (Ashkanasy et al., 2000; Jashapara, 2004):

*Typing surveys* classify organisations into particular typologies such as Handy's (1985). Such instruments attempt to generate a number of organisational culture 'types' that have certain behaviours and values linked with them. These surveys can provide senior managers with snapshots on their current positions and their desired outcomes from a cultural change management programme. The drawbacks with these typing surveys is that they assume that organisations fit neatly into strictly defined categories rather than conforming to a number of different types that demonstrate their uniqueness. The different types do not assume any continuity between the different typologies.

*Profiling surveys* aim to develop a profile of the organisation on multiple categories of norms, behaviours and values. There are three types of profiling surveys, namely, effectiveness surveys, descriptive surveys and fit profiles. Effectiveness surveys tend to assess organisational values associated with high levels of performance. Descriptive surveys purely measure organisational

values. Fit profiles tend to assess the level of fit between an individual and an organisation.

McDermott and O'Dell (2001) explain that, from a KM perspective, it is not necessary to perform an in-depth analysis of organisational culture. It is sufficient to identify those core values that will have the most potential to shape the KM effort. Essentially, McDermott and O'Dell (2001) support the notion that a KM initiative has to adapt to the culture, style and core values of an organisation. However, there are quite a few articles in KM literature that encourage the implementation of a change management program that aims to make an organisation's culture more KM-friendly, prior to deploying any kind of KM initiative (e.g. Gurteen, 1999; Rajan and Chapple, 1999; Balogun and Jenkins, 2003). Wong (2005) asserts that the biggest challenge for most KM efforts actually lies in developing such a culture. Owing to the highly influential nature of culture to the success of KM, Davenport et al. (1998) assert that companies should ensure that their KM initiatives fit into their organisational culture, or else they should be prepared to change it. So which is the best route? Should KM adapt to culture or vice versa?

Call (2005) provides strong support for the notion of changing the culture first, by stating that no organisation can successfully implement KM without first changing the culture of the organisation. Carpenter and Rudge (2003) seem to follow a similar way of thinking and provide five steps to achieve cultural change for KM:

1. *To create a knowledge sharing culture, make a visible connection between sharing knowledge and practical business goals, problems or results.*

2. *It is far more important to match the overall style of your organisation than to directly copy the practices developed by other organisations. To make knowledge sharing a natural step, think how effective change happens in your organisation.*

3. *Link sharing knowledge to widely held core values.*

4. *Human networks are one of the key vehicles for sharing knowledge. To build a sharing culture, enhance the networks that already exist. Enable them with tools, resources and legitimisation.*

5. *Recruit the support of people in your organisation who already share ideas and insights. Ask influential people and managers to encourage and even pressurise people to share their knowledge. Build sharing knowledge into routine performance appraisal.*

The five-step approach presented by Carpenter and Rudge (2003) appears to be quite laborious and time-consuming. Also, some of the recommended steps seem rather impractical, e.g. *"... and even pressurise people to share their knowledge"*. If so much effort needs to be provided before a KM initiative can kick off, it is suspected that most senior managers would not approve. In a commercial environment it would probably be quite hard to secure time and investment for such an exercise. Ellis (2003) confirms this and suggests that it is important to adapt the KM effort in accordance to the existing culture in order to achieve business-term results. McDermott and O'Dell (2001) agree with this notion and add that even when knowledge sharing is being used as a means of changing the organisation, it is more effective to first match the design of the KM scheme to the core values and style of the organisation. By building on these core values, there are more chances of creating a culture that supports knowledge sharing. Most of the organisations that they studied, including Ford, Lotus and AMS, did not describe sharing knowledge as a "new direction", a "change program" or a shift in values, even when they did engender a shift in values and behaviour. Instead, they described it as a way to enable people to pursue a core value of the organisation more fully.

Adapting the KM effort to the particular organisational culture is a useful method for quickly attracting interest and support. Organisational culture continually evolves and once a KM initiative is up and running it will be able to gradually influence that culture as well as adapt accordingly to how the culture changes in

the longer term. The size and scope of a KM initiative, i.e. if it is trying to address a short-term operational problem or support a long-term strategic objective, will also influence the approach to managing the relationship between KM and organisational culture.

## 5.4 Existing KM approaches that demonstrate goal-oriented thinking

The literature review indicated that there is a large number of KM frameworks and methodologies already present in the literature. However, it appears that only a small subset of these demonstrate elements of a goal-oriented approach. Some are theoretical in nature, while others have been derived from case studies in industry. Six of these approaches seem to make a more explicit reference to goal-oriented thinking. These are presented below (in chronological order):

***A.)** Dataware Technologies Inc. (1998, cited in Rubenstein-Montano et al. 2001) define seven main steps for KM:*

1. Identify the business problem
2. Prepare for change - obtain executive support and make the shift to a sharing culture
3. Create the team (of people responsible for leading KM)
4. Perform a knowledge audit - identify what knowledge is missing and organize the knowledge
5. Define key features required for the technological infrastructure
6. Phase in KM activities in seven sub-steps:
   - 6.1 Improve the return on investment on existing knowledge assets
   - 6.2 Enhance the process of locating applicable knowledge
   - 6.3 Increase the accuracy and speed of classifying knowledge
   - 6.4 Provide substantially enhanced functionality, security and performance for the growing knowledge-management activity in the organisation
   - 6.5 Start capturing valuable " tacit knowledge" that was previously lost to attrition
   - 6.6 Enable faster access to critical knowledge
   - 6.7 Quickly find people in the organisation who have specific knowledge
7. Link people to knowledge - knowledge directory and content management.

***B.)** Nesbitt (2002) defines six steps for successful KM:*

1. Define the business goals the KM system will address
2. Perform a knowledge audit to identify any duplication, gaps, and overlaps in an organisation's knowledge base
3. Create a visual map that describes units of knowledge and the relationships between them
4. Develop a KM strategy based on the content management, integration, search mechanisms, information delivery, and collaboration
5. Purchase or build appropriate tools for capturing, analysing, categorizing and distributing knowledge
6. Periodically re-asses the value of the KM system and make necessary adjustments.

***C.)** Robinson et al. (2004) present a three-phased approach to KM design, implementation and evaluation:*

Phase 1: Business improvement plan

1.1 Choose a business problem with a knowledge dimension

1.2 Place the business problem in a strategic context by relating it to your external business drivers, strategic objectives and critical success factors

1.3 Select measures to monitor progress towards achieving your strategic objectives, and performance measures identify the business processes they relate to

1.4 Identify current and target scores for various measures and establish the performance gaps

Phase 2: KM and transformation plan

2.1 Clarify the knowledge dimension of your business problem by identifying the KM process(es) involved

2.2 Develop specific KM initiatives to address the business problem/objectives

2.3 Select tools to support the KM process(es) identified and the implementation of the KM initiatives

2.4 Prepare an Action Plan, identify change management and resources required

2.5 Identify relationships between KM initiatives and performance measures

and show how they relate to the strategic objectives

Phase 3: KM evaluation strategy

3.1 Use the cause-and-effect map in 2.4 to assess the likely contribution of the KM initiatives

3.2 Assess the probability of success of your KM initiative in improving your performance measures (effectiveness measure)

3.3 Choose an appropriate method to assess the impact of each KM initiative on your business performance

3.4 Identify the cost for each KM initiative and the possible benefits (efficiency measure)

3.5 Prioritize your KM initiatives based on the two measures of performance.

***D.)*** *Kondo (2006) proposes five steps to a successful KM initiative as follows:*

1. Understand key business drivers – focus on bottom line; develop business case; develop and measure suitable metrics
2. Get executive sponsorship – utilise senior management support to transform the organisational culture and make it more KM friendly
3. Analyse knowledge – identify and collect only the knowledge that affects the business drivers
4. Provide rewards and recognition – for example, use a balanced scorecard approach for employee performance assessment that includes knowledge contributions as a criterion
5. Implement in phases – this helps to manage and measure employee adoption of the initiative as well as identifying best practice in each phase that can be leveraged in the next phase.

***E.)*** *Bishop et al. (2008) present eight steps for effective KM, based on critical success factor analysis:*

1. Establish a high level of understanding and a clear definition of KM throughout the organisation
2. Ensure that the KM initiative fits with the needs of the individuals and the organisation's business objectives
3. Integrate the initiative seamlessly into the organisation and the daily lives of

employees

4. Implement KM champions and a supporting team

5. Establish top-level support

6. Clearly demonstrate and communicate the benefits and initial successes of the initiative

7. Determine the suitability of financial and non-financial rewards

8. Achieve a balance between people and IT.

*F.) Chang et al. (2008) suggest six steps for organisational KM:*

1. Ascertain the mission of the KM project and set up the priority and schedule of a KM working group

2. Identify the critical knowledge items: find out the map of core competence and critical essential terms in each relevant business subject from interior and exterior experts

3. Identify the owners of critical knowledge: work out whom these knowledge items belong to and how to transfer them from exports

4. Set up one or multiple knowledge structures for a business: set up the ontology model and keywords of the organisational thesaurus

5. Set up incentives for knowledge creation and provide efficient mechanisms for knowledge sharing

6. Set up appropriate information systems to streamline KM processes: suggest a specific framework to be one of the common protocols for information transfer and integration.

The six approaches presented above were analysed and compared so as to identify which KM factors (as presented in section 5.2) they seem to take into consideration. The results of this analysis are presented in Table 5.4.

| KM approach / KM factor | Dataware Technologies (1998) | Nesbitt (2002) | Robinson et al. (2004) | Kondo (2006) | Bishop et al. (2008) | Chang et al. (2008) |
|---|---|---|---|---|---|---|
| goals & priorities | ✓ | ✓ | ✓ | ✓ | ✓ | ✓ |
| leadership & sponsorship | ✓ | | | ✓ | ✓ | |
| organisational culture | ✓ | | | ✓ | | |
| organisational structure | ✓ | | | | ✓ | ✓ |
| organisational processes | ✓ | ✓ | ✓ | | ✓ | ✓ |
| IT support for KM | ✓ | ✓ | ✓ | | ✓ | ✓ |
| performance measurement | ✓ | ✓ | ✓ | ✓ | ✓ | |
| resources | | | ✓ | | | |
| HR management & development | | | | ✓ | | ✓ |
| motivational aids for knowledge sharing | | | | ✓ | ✓ | ✓ |
| external conditions | | | | | | |

Table 5.4: Analysis of inclusion of factors that influence KM in the six approaches that demonstrate goal-oriented thinking

As can be seen from Table 5.4, none of the six KM approaches seem to take into consideration all of the identified KM factors. Dataware Technologies Inc. (1998, cited in Rubenstein-Montano et al. 2001) and Bishop et al. (2008) share the top position with seven out of eleven KM factors considered in their approach. In addition to the consideration of KM factors, each of the six KM approaches demonstrates other advantages and disadvantages. For example, Dataware Technologies Inc. (1998, cited in Rubenstein-Montano et al. 2001) demonstrates many stages and sub stages, yet some of these seem quite generic and it is not clear how they would be achieved. Nesbitt's (2002) demonstrates a strong focus on the preparation of a KM initiative as well as the evaluation of its performance, but offers little advice about the actual implementation phase. Robinson et al. (2004) demonstrate a strategically phased approach but seem so heavily focused on performance measurement that they neglect some very significant KM factors, e.g. leadership, sponsorship and organisational culture. Kondo's (2006) approach presents five steps and yet analysis of these steps leads to the conclusion that there is more than one major activity involved in each step. In addition, Kondo's approach caters for motivational aids as well as HR management and yet mentions nothing about HR development. Despite demonstrating a focus on goal-orientation, Bishop et al. (2008) start with providing a company-wide working definition of KM prior to defining the KM initiative's goals. This seems in contrast to goal-oriented thinking for KM. Chang et al. (2008) demonstrate such a strong focus on knowledge mapping, terminology and ontology in their approach that it seems to be to the detriment of other important KM factors, e.g. leadership and sponsorship, organisational culture and performance measurement.

All of the KM approaches discussed above demonstrate advantages and disadvantages as well as differing levels of consideration for the critical KM factors identified in section 5.2. None of these approaches, however, seem to present a complete and holistic goal-oriented KM methodology. This has reaffirmed the need for such an approach and the following section presents a methodology that has been developed in response to this need.

## 5.5 The GOKM methodology

The primary purpose of this research is to develop and evaluate a new goal-oriented KM methodology that can support both long-term strategic goals as well as aid in solving short-term operational problems. After taking into consideration the key lessons learnt from the pilot KM study that was carried out at Danwood, the review of factors and enablers that influence KM and the review of existing KM methodologies that demonstrate a goal-oriented focus, the following methodology is proposed for Goal-Oriented KM (GOKM):

1. Identify one or more strategic goals or operational problems that are of significant priority to the organisation and can be supported by a KM initiative

2. Assess the impact of the goals or problems, including an estimate of the associated costs and benefits

3. Carry out a scoped knowledge audit to identify the knowledge gaps that are contributing to the problem or will help to deliver the goal if closed

4. Design a KM initiative that focuses on addressing the specific goals or problems
   - 4.1 Consider technology enablers that will need to be put in place in order to implement the initiative
   - 4.2 If applicable, consider the necessary adjustments to organisational structure and processes
   - 4.3 If applicable, consider any implications on human resource management and development

5. Prepare a business case that justifies the cost of implementing the solution by comparing it with the costs and benefits, derived in step 2

6. Secure senior support and sponsorship based on the business case from step 5

7. Define measurable success criteria (e.g. cost, time, etc.) based on the goals

or problems to be addressed

8. Identify the predominant organisational culture and how this will impact on the approach

9. Gain workforce buy-in, based on the organisational culture identified from step 8

10. Identify suitable reward systems to encourage participation in the KM initiative

11. Implement the KM initiative in a pilot scope

12. Evaluate the success of the pilot against the defined criteria from step 7

13. Use the proven success to facilitate a wider roll out of the solution and to promote new proposals to solve further problems.

It is important to underline that not all steps would always be mandatory. The size and scope of the initiative, as well as the particular context in which it is to be applied, will influence the level to which each step should be carried out. Each of these steps will be illustrated in practice, via a series of case studies in industry, as outlined in the following section.

## 5.6 Identifying opportunities to test GOKM in industry

The next stage in this research project was to seek out opportunities to test the GOKM methodology in industry, via action research and participant observation. This is essential in order to gather evidence of the methodology's ability to contribute to organisational goals and problem solving. Danwood's senior management agreed to continue participating in this research and provided the first environment in which to test GOKM. This excellent opportunity to evaluate and refine the methodology at Danwood is described in Chapter 6. However, it

was recognised that it would also be important to test GOKM in other organisations in order to ensure further refinement and wider applicability of the methodology. The author and his research supervisors therefore sought opportunities to leverage business relationships and partnerships in order to invite more organisations to participate in this study. This resulted in the implementation and evaluation of GOKM at HSBC (described in Chapter 7) and HBOS (described in Chapter 8).

## 5.7 Summary

This chapter has presented the Goal-Oriented KM (GOKM) methodology. The three key influencers that shaped this methodology were: the review of existing KM approaches that demonstrate goal-oriented thinking (Chapter 2), the pilot KM study that was carried out at Danwood (Chapter 4) and the review of factors that influence KM (Chapter 5). In addition, the special importance of the relationship between KM and organisational culture has been underlined. This chapter completes Objective 1.2 (*identify key success factors and barriers for effective KM implementations*) and Objective 3 (*design a goal-oriented KM methodology, based on analysis of KM methods from the literature review as well as lessons learnt from the pilot study*). The following chapter focuses specifically on addressing Objective 4 (*implement the goal-oriented KM methodology in industry and evaluate its ability to address specific organisational problems with pragmatic metrics*) and Objective 5 (*refine the goal-oriented KM methodology, based on lessons learnt from implementing in industry*) by implementing and evaluating GOKM at Danwood.

# Chapter 6: Case Study of GOKM at Danwood

*"There is a way in which the collective knowledge of mankind expresses itself, for the finite individual, through mere daily living... a way in which life itself is sheer knowing."*

*** Laurens Van der Post ***

## 6.1 Chapter overview

This chapter presents the step-by-step implementation of the GOKM methodology at Danwood. This begins with identifying a key problem at Danwood - the end-to-end processing time of sales orders - and is followed by an estimation of the impact of the problem in terms of costs and other metrics. The next step is to carry out a scoped knowledge audit that focuses specifically on identifying the knowledge gaps in the sales order process. A new proposal is then presented in which some of Danwood's core departments are restructured in order to create a knowledge-driven centre of excellence. Following approval by Danwood's board of directors, the implementation of the proposal is carried out and the key observations are discussed. Finally, the GOKM methodology is revisited in order to show how the lessons learnt from this case study have helped to refine the approach.

## 6.2 Goal analysis: "reducing processing time of sales orders"

This section describes the application of GOKM step 1 (*identify one or more strategic goals or operational problems that are of significant priority to the organisation and can be supported by a KM initiative*) and GOKM step 2 (*assess the impact of the goals or problems, including an estimate of the associated costs and benefits*).

The first step in the application of GOKM at Danwood was to identify a significant problem that could be fully or partially resolved by a KM initiative. Following the one-to-one meetings with senior members of the executive board, it was clear that there was one particular problem that was a common theme in

these discussions. More specifically, it had been noticed that the average time that was needed (approx. 14 days) to receive, process and deliver an order to a customer was significantly higher than the target time (7 days). This had a serious impact on financial costs while also causing a negative effect on customer satisfaction and colleague morale.

A simple analysis of Danwood's order book revealed the key issues and associated cost implications:

29% of orders were on hold, resulting in 83% of stock being tied up without generating profit. The 29% of orders on hold were further broken down as:

- 12% of orders were on hold due to incomplete customer information / paperwork
- 17% of orders were on hold due to a breakdown at one of the order processing stages but with no detailed information that could explain the cause.

The average order lead time of 12-14 days resulted in cost implications, such as extra manpower needed to investigate the cause of order hold-ups (salaries could n ot be disclosed) and high postage costs, which had to be paid by Danwood, due to having to deliver goods with an express courier in order to reduce the delay. Danwood's courier agreement was not available for review. However, it was estimated that each delayed order reduced profits by an average of 5% due to the associated express postage costs.

All the stock that was allocated to orders that were on hold was causing a significant shortage of warehouse space. This had an impact on costs, due to having to pay the lease (lease amount could not be disclosed) for the warehouse space, which was primarily being taken up by stock that was not generating profit. In addition, there were also additional costs associated with having to employ extra manpower (salaries could not be disclosed) to manage the shortage of warehouse space.

According to managers that were interviewed, some of the fundamental contributors to the order delays were: lack of communication between departments; lack of visibility of order progress and the reasons for the delay; and repetition of tasks, caused by the aforementioned lack of communication and visibility. In addition, order delays also had a knock-on effect that caused further problems, e.g. receiving a significant number of complaints from customers due to late delivery and colleague morale being impacted by a lack of knowledge to solve the issues.

The next step was to conduct a knowledge audit and further analysis of the sales order process in order to verify if the above perceived causes were accurate and whether there were other causes to be identified and addressed.

## 6.3 Scoped knowledge audit with collaborative mapping technology

This section describes the application of GOKM step 3 (*carry out a scoped knowledge audit to identify the knowledge gaps that are contributing to the problem or will help to deliver the goal if closed*).

The end-to-end sales order process and associated activities provided the scope for a knowledge audit at Danwood. The purpose of this knowledge audit was to identify the knowledge gaps that were contributing to the problems that had been identified in section 6.2 and, possibly, to discover potential solutions that already existed within the system.

### 6.3.1 Scoped knowledge audit approach

As previously discussed in Chapter 4 and Chapter 5, knowledge audits are an important part of a KM initiative. Knowledge audits often result in the production of knowledge maps and intellectual asset locators (Pemberton, 2004). A knowledge map is a visual representation of an organisation's knowledge resources and the relationships and processes that connect them (Nesbitt, 2002). Knowledge maps help clarify what has been learned, and what needs to

be learned, identify knowledge deficits which must be addressed and discrepancies between perception of what is thought to be known and what is actually known (Call, 2005).

As demonstrated in Chapter 4, a knowledge audit can be conducted by one or more external consultants via interviews and similar data-collecting exercises. This is usually followed up with a report to senior management that recommends changes and optimisations. This method can be expensive, time-consuming and potentially inaccurate because it is heavily based on how much employees will be prepared to reveal to the "outsider" consultant, as well as having to rely on the consultant's individual perception of the data. The end result can often be an idealistic rather than realistic view of the organisation's operations and by the time it is completed it can also be out-of-date.

As an alternative to this approach, the knowledge audit that was conducted in this case relied on the collective effort of in house knowledge-building teams. These teams were not specially formed for this purpose. They were existing teams within the organisation that shared common characteristics and participated in linked business processes. This approach is based on the assumption that the people that execute business processes are considered to be the experts and are therefore likely to make significant suggestions for improvement, based on their experience. This also increases the chances of achieving colleague "buy-in" to help make the initiative a success as it provides a more personal motive. By collaborating with colleagues, it became possible to produce knowledge based process maps that were ideal for identifying areas for improvement. This also ensured that the knowledge audit was conducted a lot faster and that the accuracy of the knowledge maps was higher. This approach also assisted staff in further understanding their role in the overall process structure of sales order processing.

A simple analysis of Danwood's organisational structure identified 110 colleagues in 13 business units that were involved in some part of the end-to-end sales order process. It quickly became apparent that it would not be

practical in terms of time and resources to try and conduct the knowledge audit on a one-to-one basis with 110 colleagues. Instead, the author enlisted the help of 18 team leaders to take ownership for the knowledge audit within their respective teams.

The aforementioned team leaders were introduced to the fundamental concepts of KM and GOKM (on a need to know basis, i.e. "making it relevant") in the Danwood context via a series of presentations and workshops. This was followed by an explanation of a knowledge audit and how this was going to be used at Danwood to identify knowledge gaps that were contributing to the problems and delays in the sales order process.

It soon became apparent that in order to conduct the knowledge audit efficiently it would be important to source the right technology as an enabler to the chosen approach. This proved to be more of a challenge than initially anticipated. The author was asked to compare offerings from companies that specialised in process/knowledge mapping software. External consultants, representing Microsoft Visio, SmartDraw, QMAP and ManDos, delivered a series of demonstrations. All of these software suites were found to be interesting but not in line with the chosen approach. They were better suited to the traditional approach of one or a few consultants/analysts using the software to perform all the knowledge mapping. However, the fifth demonstration, delivered by Triaster, offered an alternative proposition that appeared to be a good match to the approach that had been recommended at Danwood. Triaster's software, *Process Navigator* (Triaster, 2004), was based on a methodology of collaborative, bottom-up process mapping, where the activity of process mapping is carried out by colleagues themselves, rather than someone external. This approach was parallel to the approach of bottom up knowledge mapping that had been recommended. This provided an opportunity to use Process Navigator for knowledge mapping rather than just process mapping and offered the opportunity for product improvement for Triaster, while also supporting the chosen KM audit approach.

The team leaders were trained in the use of Process Navigator (that had been customised to enable knowledge mapping) and took ownership of training their own team and producing high quality knowledge/process maps. These were collated by the project manager (the author) in order to build the entire map of the sales order process and present it to senior management.

The aforementioned approach to knowledge auditing and mapping is presented in Figures 6.1 and 6.2.

### 6.3.2 Outputs of the scoped knowledge audit

The output of the knowledge audit was a collection of knowledge/process maps and associated documents. The key maps are presented in Figure 6.3 (overview of the Danwood sales order process) and Figure 6.4 (Danwood process for sales order communication between branches and Head Office).

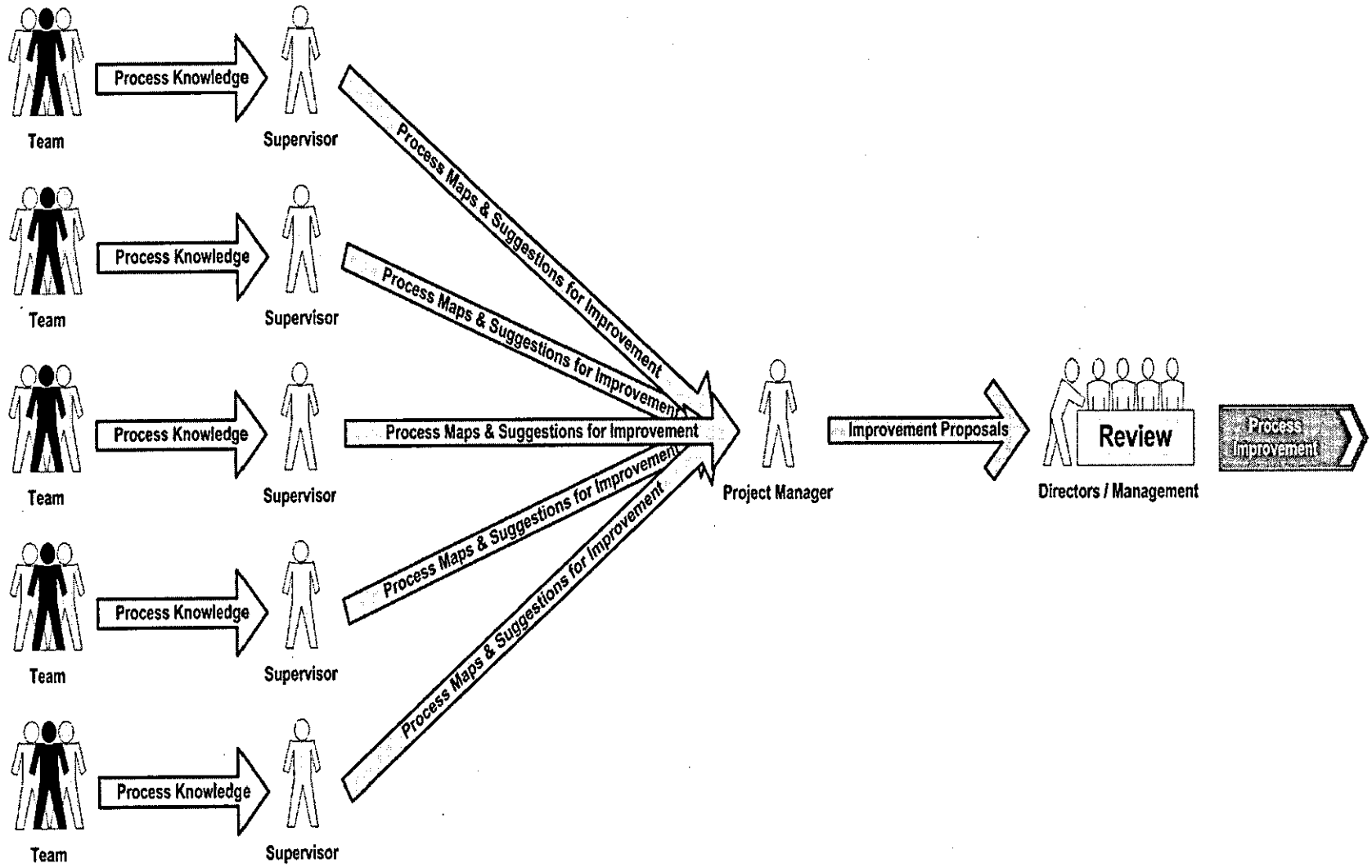


Figure 6.1: The knowledge audit approach at Danwood

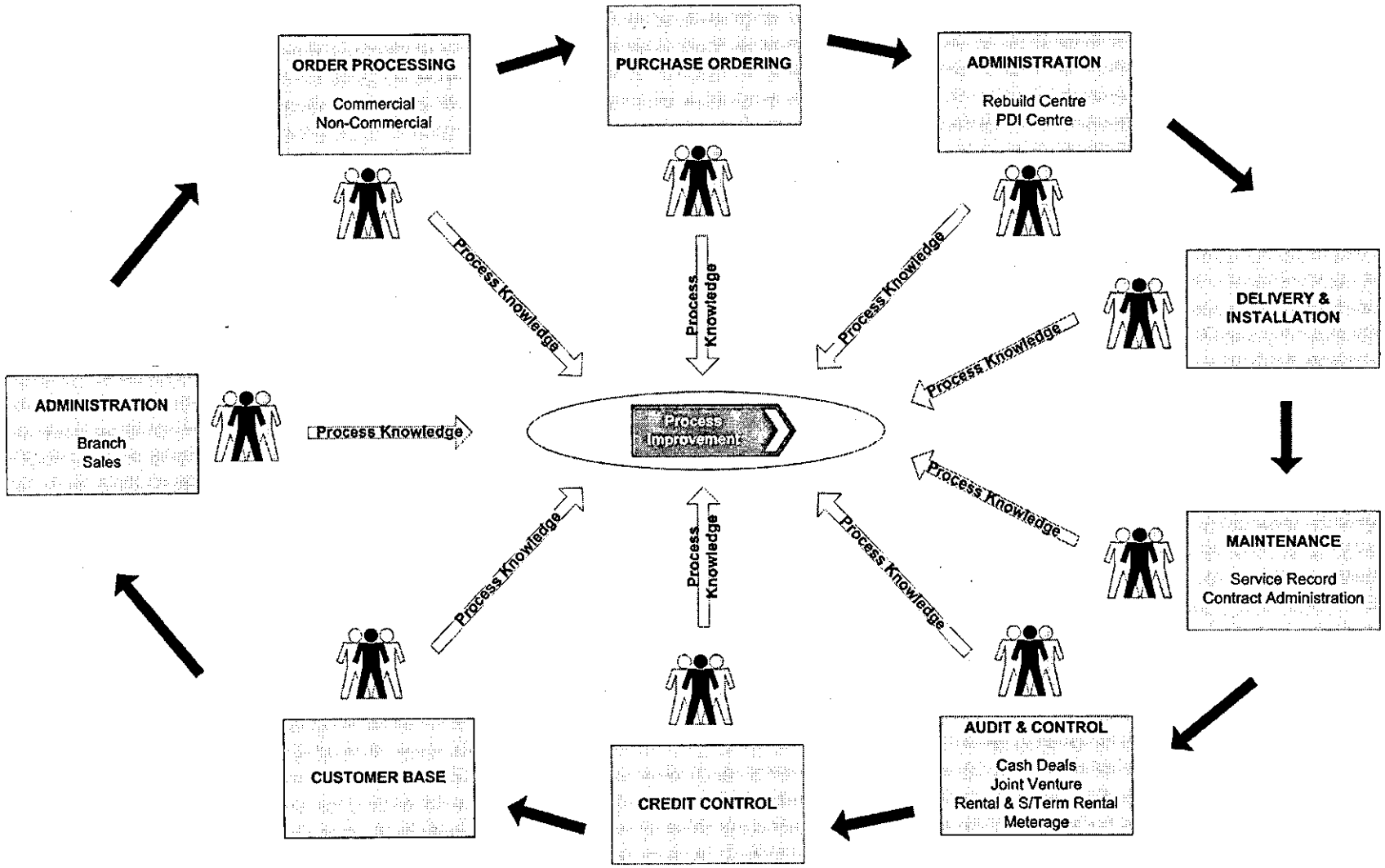


Figure 6.2: The knowledge mapping approach to capture the Danwood sales order process

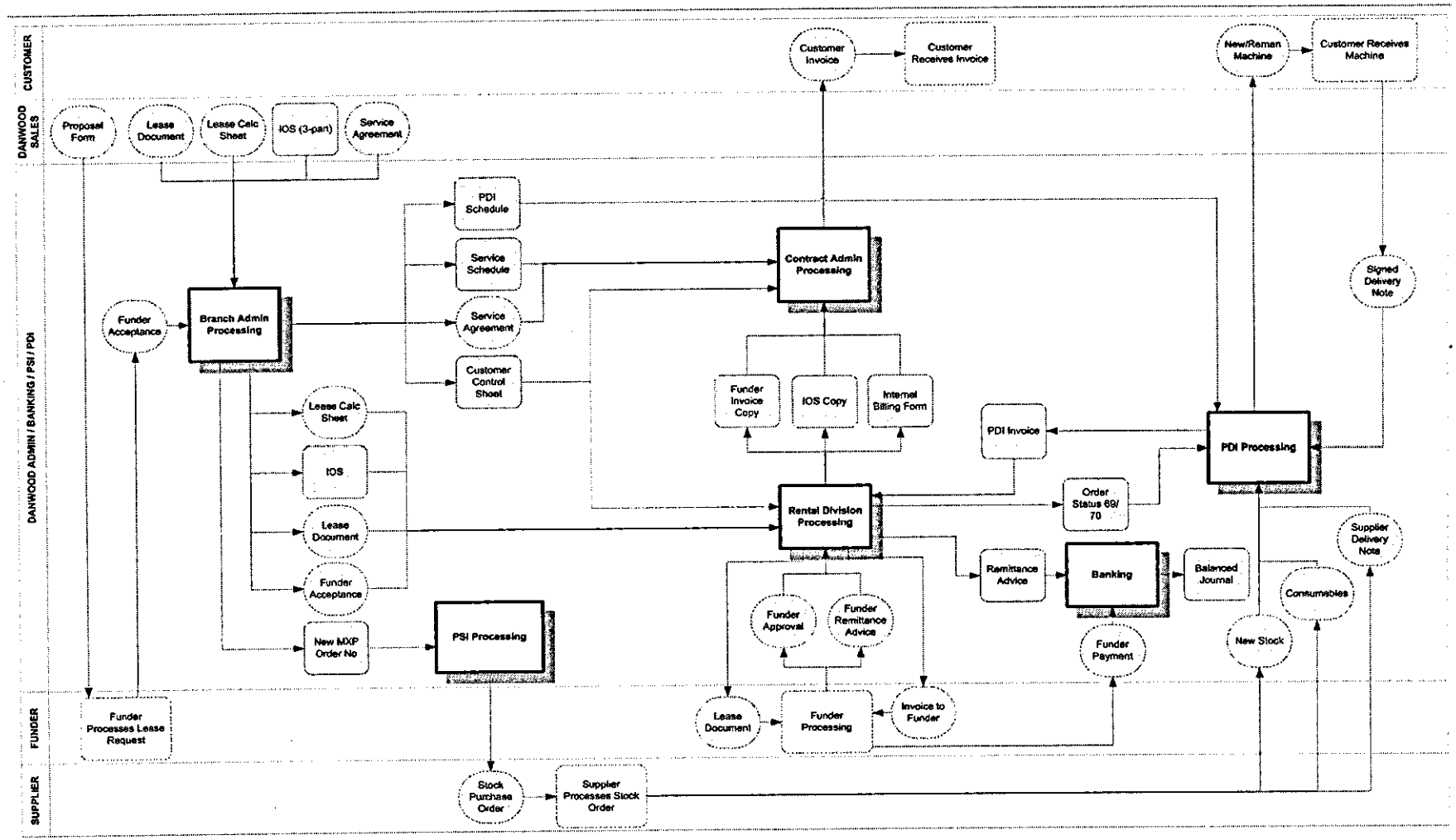


Figure 6.3: The Danwood sales order process overview

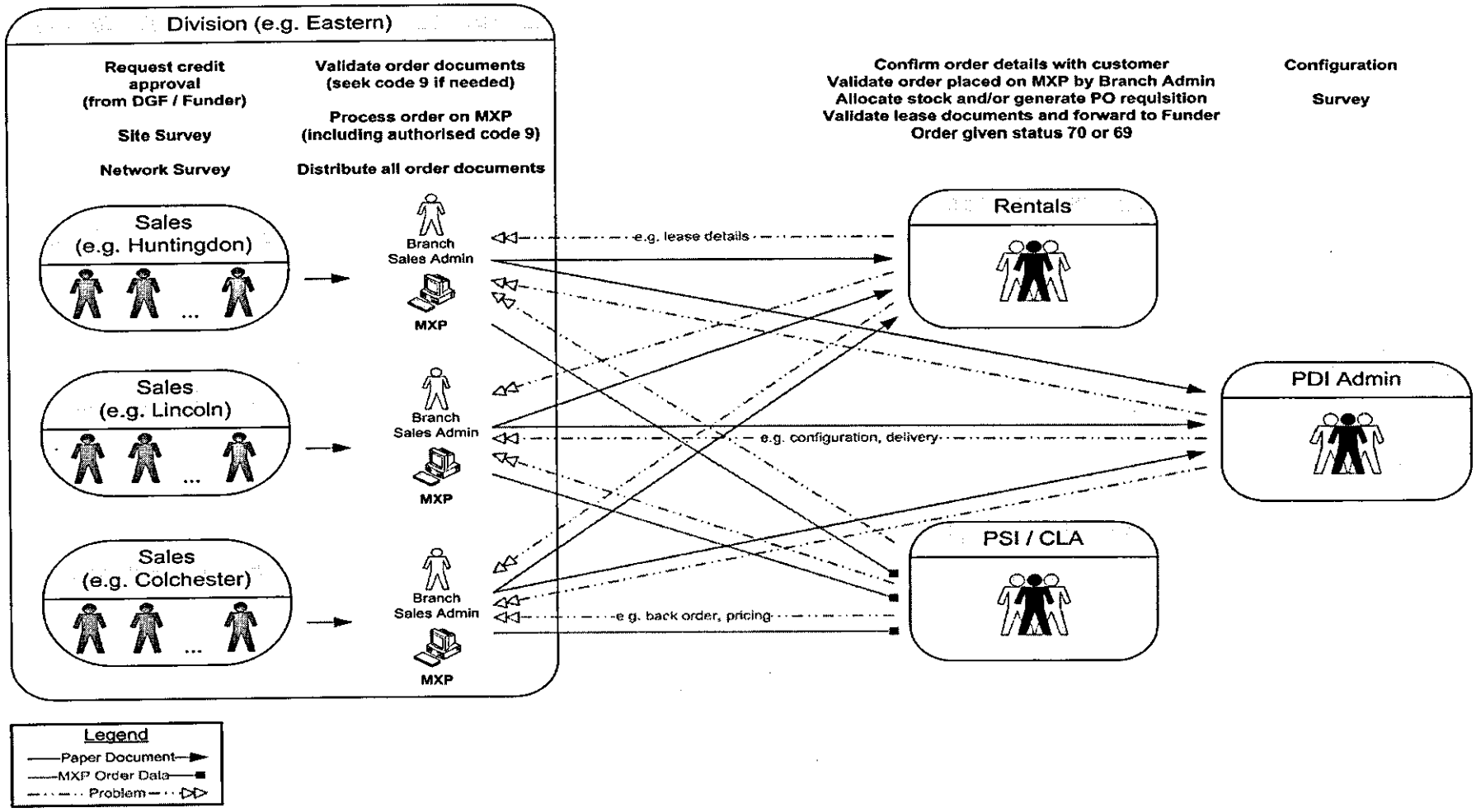


Figure 6.4: The Danwood process for sales order communication between branches and Head Office

Analysis of the knowledge audit outputs highlighted the following inefficiencies in the sales order process:

- High-level of process complexity
- Large amount of paperwork
- Outdated/slow methods of order document delivery and workflow
- Lack of common visibility of order progress across all departments
- Lack of a single point of contact / owner of the sales order end-to-end
- Ad-hoc rather than structured communication channels between departments
- Critical knowledge "owned" by individuals in widely dispersed locations

The following section demonstrates how a knowledge-based solution was designed and implemented in order to address the aforementioned inefficiencies.

## 6.4 Designing a knowledge-based solution to improve the sales order process

This section describes the application of GOKM step 4 (*design a KM initiative that focuses on addressing the specific goals or problems*) and GOKM step 5 (*prepare a business case that justifies the cost of implementing the solution by comparing it with the costs and benefits, derived in step 2).*

### 6.4.1 Approach to designing a solution

The approach taken to design a solution for the problematic sales order process was an adaptation of Morey's (2001) approach to process-oriented KM, which was previously discussed in Chapter 2. Morey's approach is based on Goldratt's (1994) Theory of Constraints (TOC). Goldratt identified that within an organisation's operational framework there are business processes that act as the "weaker links" in the system and provide a "constraint" that stops the organisation from achieving higher performance. Rather than focusing on improving the entirety of the business processes, as suggested by other theories in the same field e.g. Total Quality Management (TQM), Goldratt believes that management should invest their limited resources into the

processes that will actually have an impact on the bottom-line. According to TOC theory, business processes are interlinked in a way that is analogous to a steel chain. In order to strengthen the chain, one must strengthen the weakest link. If a link other than the weakest is strengthened, the strength of the whole chain is not increased (Motwani et al., 1996a).

Through combining process-oriented KM with TOC theory, it is possible to create an approach where KM efforts are focused on the weakest business processes that need the most attention - in this case, Danwood's sales order processes and the inefficiencies that were highlighted in section 6.3.2.

### 6.4.2 The proposed solution

The proposed solution for addressing the issues with Danwood's sales order process was, in essence, a restructure of the core business departments. The expectation was that this would create a knowledge-driven centre of excellence, named as the Sales Order Support (SOS) Team, which would significantly reduce the time needed for end-to-end processing of sales orders. This proposal was approved by Danwood's executive board of directors. The conceptual model is presented in Figure 6.5.

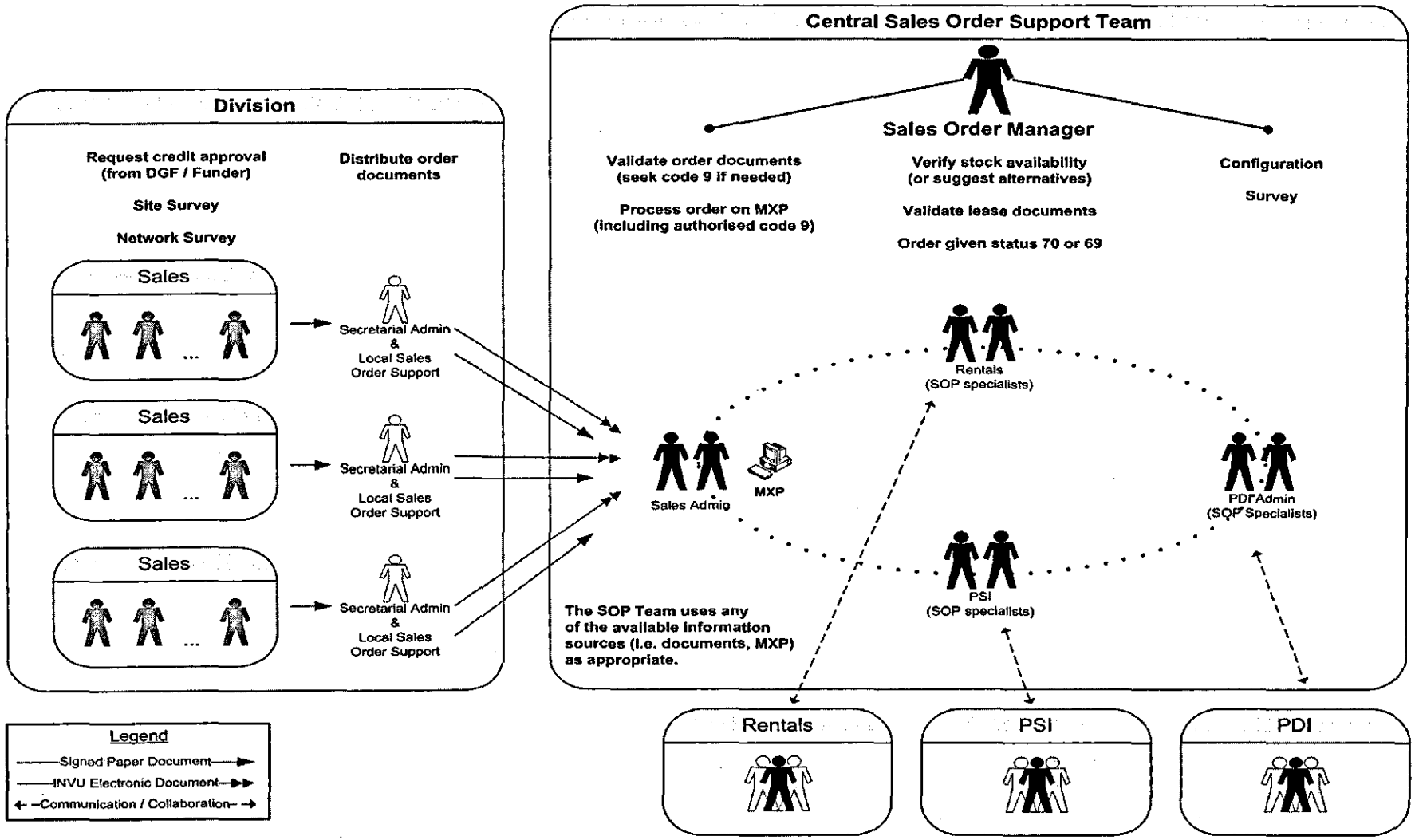


Figure 6.5: The conceptual model of the new approach for sales order communication between branches and Head Office

In order to build a robust business case for the SOS project, an estimation of the costs of implementing the proposed model was performed, in order to compare them with the costs of the problems that were identified in section 6.2.

The estimated implementation costs consisted of:

- £19k for an electronic document management (EDM) system, based on software, consultancy and training fees. This was, in fact, a heavily discounted price, due to the fact that the provider (INVU) was one of Danwood's business partners
- £18k for software development that would be needed to upgrade MXP (Danwood's main enterprise management software system) so as to "interface" with the EDM system
- £24k for additional MXP software licences, provided by Progress software company
- £2k for additional MXP user training of the new features
- £35k for hardware costs (twenty Panasonic Duplex Scanners).

This produced a total estimated cost of £98k that had to be taken into account for the business justification of the SOS project. This cost may initially seem quite high, but when compared to the costs of the problems described in section 6.2 could be seen as comparatively low. The next step was to engage with Danwood's senior management so as to define the success criteria of the project and seek approval for the associated investment. This is described in the following section.

## 6.5 Securing senior support and defining the success criteria

This section describes the application of GOKM step 6 (*secure senior support and sponsorship based on the business case from step 5*) and GOKM step 7 (*define measurable success criteria based on the goals or problems to be addressed*).

Gaining the support of senior management is essential to the endurance and,

ultimately, the success of a KM initiative. This is true mainly because it seems to be the only way to ensure that the necessary investment, resources and political influence are readily available. One of the most common methods of attempting to initiate KM in organisations seems to have been by "evangelising" the positive impact it could have. However, as Ellis (2003) explains, senior management tends to instinctively respond to this kind of attempt with questions regarding budgets, resources, additional workloads and return-on-investment. Indeed, this approach has demonstrated little evidence of success. In the majority of cases it seems to have resulted in "overselling" the benefits, especially when considering realistic business timescales and expectations, and the idea is either never taken up or dropped very soon.

By examining successful KM initiation methods and applying similar principles at Danwood, the two key methods that were identified for gaining high-level management support for KM were: a.) *integrating KM with critical business needs* and b.) *adapting to the organisation's "corporate vocabulary"*. Ellis (2003) demonstrates an interesting example at HSBC bank where he framed KM as a method of minimising business risk, which is a matter of paramount importance in the financial services industry. This aided in securing support for a range of KM activities. McDermott and O'Dell (2001) also provide a good example with "Ford 2000", a business initiative at Ford, where the focus is set on the strategic objective of reducing complexity, reinvention and time-wasting in the product development cycle. These are described as *"the mechanisms through which sharing knowledge is enabled in Ford"*.

Language is central to the evolution and acceptance of new ideas, and this is particularly true for the rise of KM in becoming an accepted management discipline (Anklam, 2002). Every organisation has a set of words and phrases that are unique to the organisation and anyone outside its environment would not be able to understand their meaning. This "corporate vocabulary" is very difficult to penetrate and change by bringing new terms into it like "KM". McDermott and O'Dell (2001) report that Ford's product development group does not talk about "KM" or "sharing knowledge". Instead they use the term

"complete analysis". In a similar manner, Lotus uses "collaborating" and AMS uses "leveraging" as vehicles for deploying KM initiatives that are grounded on pre-existing corporate vocabulary and core cultural values. An example of corporate language adapted at Danwood is "collective management", a term often used by senior management to describe new initiatives that have an all-encompassing focus on cross-departmental process improvement.

Having recognised the importance of adapting to corporate language in order to gain senior support, the business case was presented to senior management in order to gain acceptance and define the success criteria of the Sales Order Support (SOS) project. Danwood's senior management made it clear that it was important for them to see a significant focus on the key issues that were identified in section 6.2. Therefore, the main success criteria, as agreed with Danwood's senior management, were to:

- *reduce average number of days for end-to-end order process from 14 to 7*
- *reduce overdue orders from 29% to 10%*
- *reduce stock on hold for overdue orders from 83% to 33%*

The author explained to Danwood's senior management that these targets seemed quite ambitious, but that every effort would be made to reach as close as possible to achieving them. In addition, it was highlighted that there were other factors, outside of the control of the project, that could influence these targets and therefore it would not be easy to demonstrate the exact amount of contribution that the project would have made towards these goals. Danwood's senior management accepted this "caveat" and seemed to support the notion that, nevertheless, they expected that the SOS project would make a significant contribution towards these goals, even if it were hard to measure the exact amount. They also agreed that the estimated costs of the implementation, as described in section 6.4.2, were justifiable in comparison to the expected benefits to be delivered.

## 6.6 Implementation of the new sales order support (SOS) team

This section describes the application of GOKM step 8 (*identify the predominant organisational culture and how this will impact on the approach*), GOKM step 9 (*gain workforce buy-in, based on the organisational culture identified from step 8*), GOKM step 10 (*identify suitable reward systems to encourage participation in the KM initiative*) and GOKM step 11 (*implement the KM initiative in a pilot scope*).

As previously mentioned in Chapter 5, from a KM perspective, it is not necessary to perform an in-depth analysis of organisational culture. It is sufficient to identify those core values that will have the most potential to shape the KM effort. Based on this and due to time constraints, the author provided an individual assessment based on one-to-one interviews / discussions with representatives from all core departments at Danwood and this led to the high-level conclusion that Danwood predominantly demonstrated the Power Culture in Handy's (1985) typology (previously discussed in Chapter 5).

### 6.6.1 Building strategic relationships with the workforce

Adapting to the corporate language appears to be equally important when building strategic relationships with the workforce as it is when trying to secure sponsorship from high-level management. Previous experience at Danwood has highlighted that using too much technical jargon and adding hype is not an effective way of impressing an audience – in fact, it may even have a negative effect, e.g. loss of credibility. Ellis (2003) suggests that KM principles should be explained on a need-to-know basis (make it relevant) and labelled with established business words, in order to attract more positive attention and gain faster support.

Once the support and sponsorship of high-level management had been secured at Danwood, it was time to focus on achieving the "buy-in" of the workforce. This task was executed as an incremental process by starting at the departmental level and spreading across the company on a step-by-step basis.

When deciding whom to approach in the workforce, it was essential to identify the "key influencers" that needed to be involved in order to enlist their help to deliver substantial and sustainable organisational change and improvement. Within the group of "key influencers" it was also important to recognise the key experts and activists that were likely to help in driving the new initiative throughout their departments and across the organisation. These are often referred to as "knowledge champions" and were identified via a form of social network analysis (SNA). However, rather than follow the traditional approach to SNA (e.g. draw up a graphical map of people contacts), due to time constraints, it was necessary to speed up the process by relying on informal discussions with colleagues. The basic criteria for suggesting colleagues as knowledge champions were: relevance of daily business activities and expertise, level of interaction with the sales order process and reputation for collaborative behaviour. One interesting observation was that in quite a few cases the choice of knowledge champions was not confined to the boundaries of formal organisational and team structures.

McDermott and O'Dell (2001) explain that organisational culture is not homogeneous. There are always subcultures, sometimes simply different from the organisation as a whole, sometimes in opposition to it. Their advice is to recruit the support of people or divisions in the organisation that already demonstrate knowledge-sharing behaviours. Ellis (2003) agrees and also underlines the importance of building a good relationship with the people in the IT department, as they have access to useful resources that can aid the KM deployment process.

The initial reaction of Danwood's workforce when being initiated to the project was a sense of disbelief. It seemed that they were accustomed to hearing about new initiatives that promised to transform the organisation but never actually "delivered". It was necessary at this point to ensure that two "messages" were effectively delivered to the workforce. The first was to demonstrate that senior management was committed to the project and that all proposed activities had been authorised. As Connelly and Kelloway (2003) explain, this is a very

important task because perceptions about management's support for knowledge sharing are essential to the creation and maintenance of a positive knowledge sharing culture in an organisation. They also agree with Martiny (1998) that uncertainty about leadership commitment to knowledge sharing is a key challenge in the deployment of KM. The second "message" was that the new initiative gave the opportunity to the workforce to not only participate in, but also take ownership of making the project successful. This was a fundamentally different approach to being assigned a passive role in an improvement initiative and therefore had the potential to increase motivation. Communicating the wider aspects of improvement is, of course, important, although this perhaps has less chances of securing staff commitment than highlighting personal benefit in day-to-day business operations. In other words, a traditional "cost cutting and overall efficiency" improvement scheme, generally, did not seem to inspire employees into wanting to actively and continuously contribute towards its goals. Therefore, the focus was set on communicating those personal benefits for participating employees that were also expected to have a positive effect on overall team and organisational performance.

### 6.6.2 Coaching team leaders as KM facilitators

As advocated in Chapter 5, adapting the KM effort to the particular organisational culture is a useful method for quickly attracting interest and support. It is important to underline that coaching team leaders as KM facilitators is not, in this instance, seen as a way of trying to change the organisational culture to fit KM. Instead, the intention is to use it as a way of securing workforce buy-in, within the context of Danwood's "Power Culture".

To enable the workforce to participate in the initiative and, just as importantly, to make this participation visible, a new role of middle managers and team leaders as facilitators of knowledge based working was established. This gave team leaders additional responsibilities, such as:

- Acting as the interface between senior strategic direction for KM and the actual implementation of KM "on the front-line"

- Facilitating the acceptance of change by increasing awareness and understanding of the change and promoting a belief in its value and a commitment to its success
- Developing their team's collective learning capability by creating an environment that highlights knowledge sharing as a core competence.

Mentoring team leaders to endorse and promote the Sales Order Support (SOS) project was one of the first steps to be carried out. They, in turn, were expected to propagate the new paradigm to their own teams and facilitate SOS as part of their new role. This presented a dilemma between creating a sense of urgency to perform and providing team members with enough time and resources to develop and exchange value-creating knowledge. This was a "balancing act" that needed time to be refined. As a guideline, team leaders were advised to allocate resources to those knowledge-creating activities that they expected to have the most potential to contribute towards the specific business goals.

The new role of team leaders as change agents for the acceptance of knowledge-based working and as facilitators of knowledge-based working in the longer term was underlined. This in turn highlighted the need to help the team leaders with unlearning the traditional "command and control" management style that they were accustomed to and moving towards "facilitation" as their primary role.

### 6.6.3 Reward and recognition for knowledge sharing

As previously discussed in Chapter 5, many authors have highlighted motivational aids for knowledge sharing as a significant catalyst for KM success. In many cases, authors have explicitly advised against financial rewards, recommending intangible rewards instead, such as peer recognition, learning opportunities, greater autonomy and linking to annual job performance review. In addition, a particular focus on group-based compensation has been highlighted as a significant enabler for knowledge exchange.

Senior management at Danwood had been introduced to the major concepts that underpin KM and were therefore able to appreciate that extrinsic rewards for knowledge sharing, e.g. company bonds, may result in knowledge contributions of questionable quality, i.e. volume rather than value driven.

Senior management agreed that intrinsic rewards for knowledge sharing, such as recognition and career development would have greater chances of long-term success. Some typical intrinsic rewards were put into immediate action. Individuals were recognised for their knowledge contributions via publications on the company's Intranet and newsletters, some performance reviews were refined to include evidence of knowledge sharing as a criterion and new career prospects were developed, e.g. a new Mergers and Acquisitions specialist role. All of the above resulted in a large influx of knowledge sharing and self-acknowledged knowledge based working because employees began to realise the "real" value of exchanging knowledge.

### 6.6.4 The HR and technical implementation to support the new SOS model

The new SOS model was implemented at Danwood in three main phases in order to carefully manage the transition and guide colleagues into the new working paradigm, while delivering benefits with each phase. The first phase involved the formation of the new organisational team structures, including the SOS team. This was followed by the implementation of electronic document management (EDM) technology to support the new process. The third phase involved the upgrade of Danwood's main enterprise management software system (MXP) to work with the EDM system and support the new process.

The implementation model of the new approach for sales order processing and communication between branches and Head Office is presented in Figure 6.6.

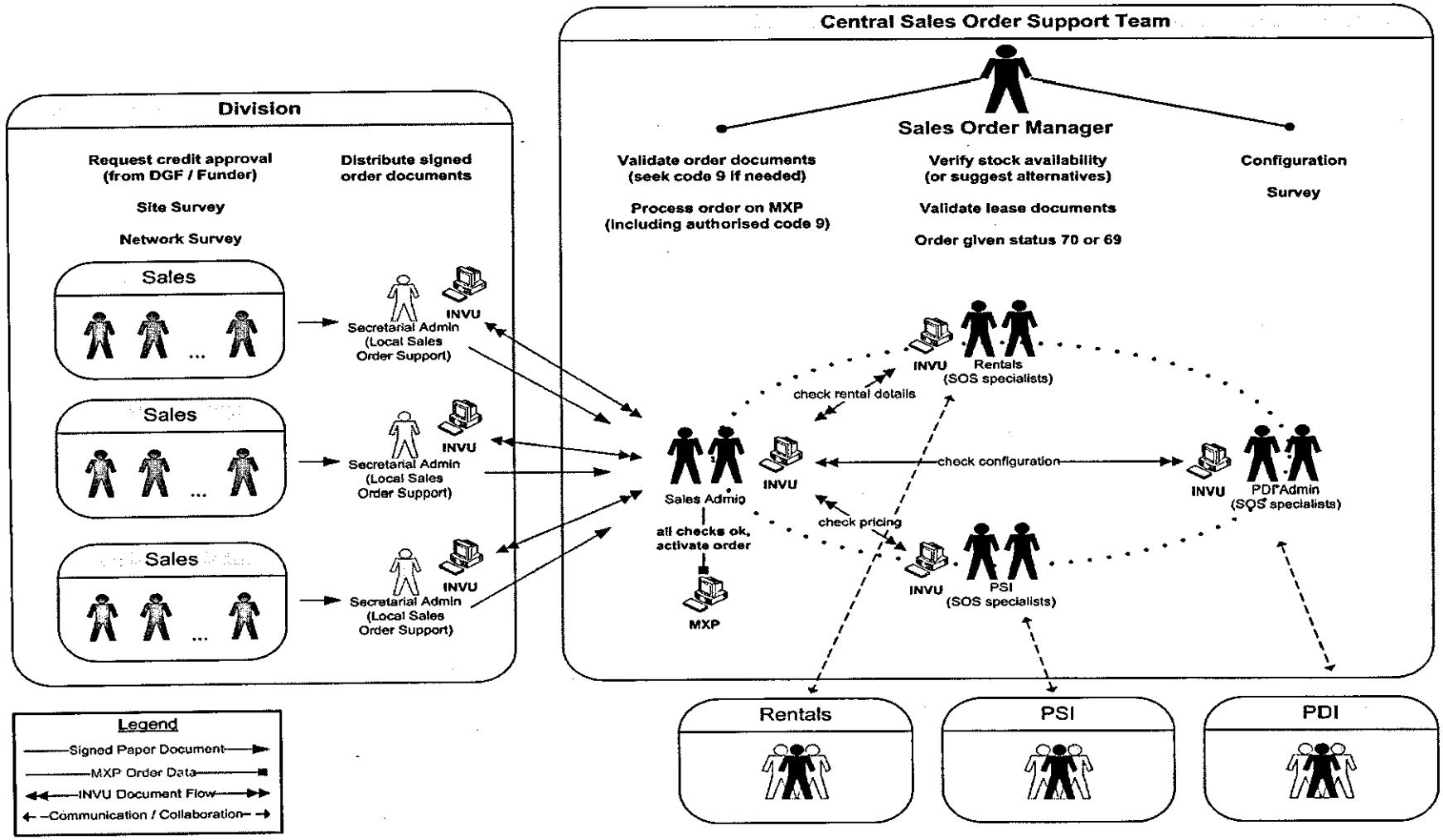


Figure 6.6: The implementation model of the new approach for sales order processing / communication between branches and Head Office

## 6.7 Evaluation of the success of GOKM and future direction at Danwood

This section describes the application of GOKM step 12 (*evaluate the success of the pilot against the defined criteria from step 7*) and GOKM step 13 (*use the proven success to facilitate a wider roll out of the solution and to promote new proposals to solve further problems*).

Following the application of GOKM at Danwood and the subsequent implementation of the SOS project, the Danwood order book was reanalysed so as to measure performance against the agreed success criteria. The results are presented in Table 6.1.

| Success criteria | Baseline | Target | Actual |
|---|---|---|---|
| Average number of days for end-to-end order process | 14 days | 7 days | 8.5 days |
| Overdue orders | 29% | 10% | 16% |
| Value of stock that is associated with orders on hold | 83% | 33% | 48% |

Table 6.1: Performance against the success criteria agreed with Danwood's senior management

Although the target values for the success criteria had not been fully achieved, the results were nevertheless commendable, as expressed by Danwood's senior management. After all, the target values had seemed quite ambitious, as previously mentioned in section 6.5. Interestingly, it later became apparent that Danwood's senior management were fully aware of this but insisted so as to "aim as high as possible". Furthermore, the ongoing application of the SOS project as well as other GOKM initiatives were expected to contribute further to achieving the target values.

As previously discussed in section 6.5, it is quite challenging to clearly demonstrate the exact amount of contribution made by GOKM and the SOS project towards the achievement of the success criteria, due to the influence of other factors that were outside of the control of the project. However, all of Danwood's senior managers agreed that GOKM and the SOS project had made one of the most significant contributions towards success.

In addition to the main success criteria, there were also additional benefits delivered, such as:

- Problems with orders identified much earlier, potentially leading to reduction in stock levels
- Reduction of process complexity and therefore expected reduction in errors and repetition
- Common visibility of order progress across all departments
- Structured communication channels between departments
- Single owner of the sales order end-to-end (Sales Order Manager)
- Improved escalation structure for dealing with hold-ups in the process
- Knowledge and expertise of managing sales orders in central SOS team
- Key man dependencies removed as SOS team members can provide cover for each other
- SOS team provides specialist knowledge and support to other teams in the process chain
- Improvement in efficiency of document flow (speed and cost)
- Reduction of paperwork and postage, which produces cost savings
- Phased reduction of staff headcount for sales order administration giving more cost savings
- Reduction in regular training requirements at branch level
- Scalability to accommodate future evolution of sales order processing system

The success of the application of GOKM at Danwood, via the SOS project, was used to promote the initiation of new KM initiatives. This continuation of KM initiatives was handed over to other Danwood employees, before leaving to test GOKM in other organisations. The most notable KM initiative to follow the one

described in this chapter was one that aimed to build a centrally managed knowledge base of all Danwood processes, in order to evaluate them and bring further improvements in a similar way to the SOS project. In addition, this would also provide useful evidence for annual audit purposes as well as material for staff training sessions. The initial proposal was drawn up and handed over to Danwood's Process Quality Manager, prior to the author's departure, for implementation.

## 6.8 GOKM methodology review after implementation at Danwood

The purpose of this section is to revisit the GOKM methodology and explain how the implementation at Danwood helped to further refine the methodology. This is in line with the grounded theory approach, as described in Chapter 3, that emphasises the need for theories to be grounded in empirical reality (Glaser and Strauss, 1967; Strauss, 1987), by providing an iterative loop for theory, checking and refinement (Denscombe, 2002).

### 6.8.1 The refinement of the GOKM methodology

Following the implementation at Danwood and taking into account the key research findings, the GOKM methodology has been revised as follows (**amendments appear in bold font**):

1. Identify one or more strategic goals or operational problems that are of significant priority to the organisation and can be supported by a KM initiative

2. Assess the impact of the goals or problems, including an estimate of the associated costs and benefits

3. Carry out a scoped knowledge audit to identify the knowledge gaps that are contributing to the problem or will help to deliver the goal if closed

   3.1 Consider the technology enablers that will need to be put in place in order to carry out the scoped knowledge audit

4. Design a KM initiative that focuses on addressing the specific goals or problems

   4.1 Consider technology enablers that will need to be put in place in order to implement the initiative

   4.2 If applicable, consider the necessary adjustments to organisational structure and processes

   4.3 If applicable, consider any implications on human resource management and development

5. Prepare a business case that justifies the cost of implementing the solution by comparing it with the costs and benefits, derived in step 2

6. Secure senior support and sponsorship based on the business case from step 5

   6.1 Adapt to corporate language when engaging with senior management

7. Define measurable success criteria (e.g. cost, time, etc.) based on the goals or problems to be addressed

8. Identify the predominant organisational culture and how this will impact on the approach

9. Gain workforce buy-in, based on the organisational culture identified from step 8

   **9.1 Adapt to corporate language when engaging with the workforce**

   **9.2 Identify potential knowledge champions**

   **9.3 Develop managers as KM facilitators**

10. Identify suitable reward **and/or recognition** systems, to encourage participation in the KM initiative

11. Implement the KM initiative in a pilot scope

12. Evaluate the success of the pilot against the defined criteria from step 7 **and highlight additional benefits**

13. Use the proven success to facilitate a wider roll out of the solution and to promote new proposals to solve further problems.

The next stage of this research was to test the refined GOKM methodology in a different environment. An opportunity arose to implement and evaluate GOKM at HSBC Bank, as presented in Chapter 7.

## 6.9 Summary

This chapter has illustrated the step-by-step application of the GOKM methodology at Danwood. This began with identifying a key problem at Danwood - the end-to-end processing time of sales orders - and was followed by an estimation of the impact of the problem in terms of costs and other metrics. The next step was to carry out a scoped knowledge audit that focused specifically on identifying knowledge gaps and inefficiencies in the sales order process. A new proposal was then presented in which some of Danwood's core departments were restructured in order to create a knowledge-driven centre of excellence. Following approval by Danwood's senior management, the implementation of the proposal was carried out and key observations were discussed. Finally, the GOKM methodology was revisited in order to show how the lessons learnt from this case study helped to refine the approach.

As previously mentioned in Chapter 5, the next logical step in this research was to seek further opportunities to test the GOKM methodology via more case studies in industry. The purpose of this was to ensure further refinement and wider applicability of the methodology. The author and his research supervisors, therefore, sought opportunities to leverage business relationships and partnerships in order to invite more organisations to participate in this research. Thankfully, the opportunity did arise and GOKM was applied and tested at HSBC Bank, as explained in the following chapter.

This chapter has addressed Objective 4 (*implement the goal-oriented KM methodology in industry and evaluate its ability to address specific organisational problems with pragmatic metrics*) and Objective 5 (*refine the goal-oriented KM methodology, based on lessons learnt from implementing in industry*). The following chapter makes a contribution towards the achievement of Objective 6 (*implement the refined goal-oriented KM methodology in other industry settings in order to test its applicability and scalability in a wider business context*) by demonstrating the implementation and evaluation of GOKM at HSBC Bank.

# Chapter 7: Case Study of GOKM at HSBC

*"Capital consists in a great part of knowledge and organisation . . . Knowledge is our most powerful engine of production."*

*** Alfred Marshall ***

## 7.1 Chapter overview

This chapter presents the implementation of the refined GOKM methodology in a case study that takes place at HSBC Bank. The problem to be addressed is one that many organisations have in common: a loss of critical business knowledge and experience each time an employee leaves their position - especially in the case of senior management. A knowledge audit of six key positions (identified as requiring urgent attention) reveals the critical business knowledge that's at risk. This is followed by the design and implementation of a five-step knowledge transfer initiative to minimise the loss of critical knowledge. Key observations and lessons learnt from the implementation are discussed and the GOKM methodology is reviewed and further refined.

## 7.2 Company profile: HSBC Group

The HSBC (Hong Kong and Shanghai Banking Corporation) Group was established in 1865 to finance the growing trade between China and Europe. Headquartered in London, HSBC is one of the largest banking and financial services organisations in the world with approximately 100 million customers and 335,000 employees across 9,500 offices in 85 countries and territories in Europe, the Asia-Pacific region, the Americas, the Middle East and Africa. As of 30th June 2008, HSBC's financial assets added up to GBP1,278 billion (HSBC, 2008). HSBC's shares are listed on the London, Hong Kong, New York, Paris and Bermuda stock exchanges and are held by around 200,000 shareholders in approximately 100 countries and territories (HSBC, 2008).

HSBC is a major user of advanced technology with an annual IT spend of approximately US$6 billion, part of which provides internet banking services to

45 million customers. In 2008, HSBC websites attracted 726 million visits during the first half of the year (HSBC, 2008).

HSBC's strategic direction reflects its position as "the world's local bank" which is achieved via leveraging local knowledge and international breadth, supported by a strong balance sheet. HSBC is progressively reshaping its business by investing primarily in faster growing markets and, in the more developed markets, by focusing on business that has international connectivity (HSBC, 2008).

## 7.3 Problem analysis: "Losing critical knowledge when employees leave"

This section describes the application of GOKM step 1 (*identify one or more strategic goals or operational problems that are of significant priority to the organisation and can be supported by a KM initiative)* and GOKM step 2 (*assess the impact of the goals or problems, including an estimate of the associated costs and benefits*).

The first step in the application of GOKM at HSBC was to identify a significant problem that could be fully or partially resolved by a KM initiative. Steve, *Senior Learning and Development Consultant* at HSBC, had already discovered the problem. Essentially, it was a problem that many organisations have in common: a loss of critical business knowledge and experience each time an employee leaves their position - especially in the case of senior management.

The problem of knowledge loss was evident whether the employee was permanently leaving the company or moving internally to another position, due to the vast size of the organisation. Even in the case of an employee taking maternity leave, the standard six-month period would often be long enough for the effect of the knowledge loss to have a significant impact.
HSBC did have a process for knowledge transfer in place but it was very basic and not strictly implemented, i.e. it was left to the discretion of the leaving

manager on how to handle the handover to the successor, if one had been identified. The efficiency of this approach produced questionable results (samples available in Appendix A), which Steve had identified as ineffective and had collated a number of responses from senior managers indicating a need for a new improved approach. The author met Steve at the *International Conference of Knowledge, Culture and Change in Organisations* that took place in London in August 2004. This eventually led to the opportunity to test GOKM at HSBC with the purpose of addressing the aforementioned problem of knowledge loss.

Analysis revealed six key positions that were of particular priority (six leavers with three successors identified at the time of the exercise):

- *Leadership Development Programmes Senior Manager*

Leaver: Gareth
Successor: James

- *Leadership Development Programmes Manager*

Leaver: Tracey

- *Group PCM (Payments and Cash Management) Training Manager*

Leaver: Jeremy
Successor: Simon

- *Regulatory and Operational Support Manager*

Leaver: Catherine
Successor: Keith

- *Reconciliations Manager*

Leaver: Margaret

- *Register Maintenance Manager*

Leaver: Josephine

After identifying the problem, it was time to execute the next step in the GOKM methodology (*identify the impact of the problem in terms of costs*). The suggestion was to use two metrics in order to estimate the costs of the problem. The first suggested metric was to measure the average "time-to-competency" of successors. Essentially, this would measure the time needed for a successor to have accumulated the essential knowledge needed to perform the role at full capacity. Time-to-competency is based on the transfer of critical knowledge from experienced individuals to new employees that will allow effective and efficient completion of assigned tasks and duties (Hack, 2002). This time would then be converted into a monetary value, based on salary, training costs, etc. Reducing this time required for knowledge transfers equates to a significant reduction in turnover costs (Hack, 2002). The second suggested metric was to measure the costs of hiring external consultants to replace lost knowledge, before and after the implementation of GOKM.

However, due to the effort needed to measure these, combined with the fact that the organisation was already "bought into" the idea of KM, it was deemed unnecessary to carry out these measurements. Simply put, in this instance, HSBC did not need "hard cost indicators" to be persuaded about the value added by this exercise. Therefore, they preferred that the author did not spend time on these metrics and proceeded to address the pressing priority of finding a solution to deal with the potential knowledge loss of the six key positions. It is also worth mentioning that, for the same reasons, it was not necessary to prepare a business case for a new knowledge transfer initiative – this had already been achieved by Steve prior to the author's involvement.

The six key positions provided the scope for a pilot and the next stage was to carry out a scoped knowledge audit, as recommended by the GOKM methodology.

## 7.4 Scoped knowledge audit of the key positions

This section describes the application of GOKM step 3 (*carry out a scoped knowledge audit to identify the knowledge gaps that are contributing to the problem or will help to deliver the goal if closed*).

The purpose of this scoped knowledge audit was to identify the critical business knowledge that was at risk in the six key positions (identified in section 7.3).

### 7.4.1 Knowledge audit approach

The knowledge audit was conducted by interviewing each of the job leavers and using their job description as a starting point in order to identify and prioritise the key knowledge requirements for that position. In addition, the job leavers were able to specify additional duties, which were important and not necessarily written in the official job description. This also included any "extracurricular" activities (e.g. heading up a special interest group) that may need to be passed on to the successor. Furthermore, the job leaver was asked to highlight which skills he/she used the most, in practice, to perform the role, in comparison to what might be suggested in the job description. The knowledge requirements were then analysed in order to identify which were most important and at most risk due to the departure of the job leaver. There was only a need for basic technology enablers, e.g. laptop, word-processing software etc. As previously mentioned in section 2.2.3, *"the tools used for capturing, analyzing and distributing knowledge do not have to be very high tech at all"* (Call, 2005).

### 7.4.2 Outputs of the knowledge audit

The output of the knowledge audit was a collection of amended job descriptions, where job duties had been edited and reprioritised following an interview with each job leaver. An interesting observation during this exercise was that, often, the interviewees would prioritise their duties in a different order to that indicated by their original job description. It was also interesting to see that additional duties that were added to the job description by the interviewee were also often marked as "high priority". In other words, there were many

cases where important duties – with associated knowledge and experience - were not in the original job description. Hence, the importance of the knowledge audit was reaffirmed. The editing and reprioritisation of duties also had an impact on the priority of knowledge and experience that had to be focused on during the knowledge transfer exercise. This was also expected to assist each successor in identifying knowledge and skills that he/she would need to carry out the role but had not yet acquired. An example of an amended job description following the knowledge audit is presented in Table 7.1.

| PRINCIPAL ACCOUNTABILITIES | HOW IT WAS ACHIEVED |
|---|---|
| 1.) To directly manage the development and delivery of a suite of programmes which meets Group and UK based business needs, work with HSBC's preferred business schools in UK. In conjunction with HRBPs design and source tailored leadership programmes for the UK based businesses. Provide advisory support for other Group businesses **(priority assigned by job leaver = 2)** | By working with senior business sponsors, line management, HRBPs and selected business schools, by interfacing regularly at senior level with partner schools and ensuring an effective working relationship which provides value added, tailored events for HSBC, by developing relationships with key HRBPs, Talent Managers and Business Heads and prioritise according to Group Strategy |
| 2.) To support and participate in the work of other units within Strategic Skills / Leadership Development **(priority assigned by job leaver = 6)** | By working closely with managers in Individual & Team Development and Assessment & Development |
| 3.) To continually reassess the operational risks inherent in the business, taking account of changing economic or market conditions, legal and regulatory requirements, operating procedures and practices, management restructurings, and the impact of new technology **(priority assigned by job leaver = 4)** | By addressing any areas of concern in conjunction with line management and /or the appropriate department |
| 4.) To implement the Group Compliance Policy by containing compliance risk in conjunction with the relevant compliance department. The term 'compliance' embraces all relevant laws, rules and codes with which the business has to comply **(priority assigned by job leaver = 5)** | By adhering to the bank's agreed processes/procedures - achieving a satisfactory Audit report |

MAJOR CHALLENGES (not obligatory)

| |
|---|
| 5.) The remodelling of internal management training programmes is a major global project with design and resourcing challenges across a range of RGTs and businesses. **(priority assigned by job leaver = 1)** |

OTHER INFORMATION (not obligatory)

| |
|---|
| **Added by job leaver: Relationship manage the implementation of new programmes across the global community of Group Management Development Trainers (priority assigned by job leaver = 3)** |

Table 7.1 Sample of job description amended during knowledge audit (amendments in bold font)

## 7.5 Designing a knowledge transfer initiative

This section describes the application of GOKM step 4 (*design a KM initiative that focuses on addressing the specific goals or problems*). As previously mentioned in section 7.3, the application of GOKM step 5 (*prepare a business case that justifies the cost of implementing the solution by comparing it with the costs and benefits, derived in step 2*) was not necessary in this case study.

A KM initiative was designed, based on a review of relevant academic literature and practitioner case studies, in order to address the knowledge transfer requirements of the six positions identified in section 7.3. This resulted in the creation of a "spin off" knowledge transfer methodology, which, if proven successful, could be applicable in a wider context. Indeed, this knowledge transfer methodology formed part of a proposal to address similar challenges at HBOS Bank (described in section 8.8.1).

### 7.5.1 Knowledge transfer methodology

In order to address the specific problem of losing tacit knowledge of departing employees, five basic steps were proposed, based on a combination and adaptation from Hack (2002), Knowledge Harvesting Inc (2003), Archibald (2004), Forryan (2004a) and Perkmann (2004):

1. Prioritise the knowledge that was identified in the knowledge audit, in terms of business risk / impact if lost
2. Design and deliver knowledge transfer workshops (KTWs)
3. For each KTW, capture the outputs in a knowledge harvest report (KHR)
4. Handover KHRs to corresponding job leavers for review / editing
5. Identify and implement opportunities for improvement based on the KHRs

The roles of participants in these five steps have been defined, based on an adaptation from Archibald (2004), Forryan (2004a) and Perkmann (2004), as follows:

- "knowledge holder" (the job leaver)
- "knowledge recipient" (the job successor)
- "knowledge mediator" (co-ordinates the transfer of knowledge, often a person from the HR department, can also be a temporary recipient if a job successor has not been identified yet)
- "facilitator" (facilitates the KTWs and produces the KHRs)
- "line manager" (line manager of job leaver and successor)

The role of the author in the knowledge transfer exercise was as facilitator, while Steve was the knowledge mediator. Each of the five steps mentioned above are discussed further below.

Step 1: Prioritise the knowledge that was identified in the knowledge audit, in terms of business risk / impact if lost

Each knowledge holder performed the prioritising of knowledge, in terms of business risk and impact if lost, with the help of the facilitator and in some cases with the participation of the line manager.

A framework was proposed for assessing this risk, based on a combination of the frameworks proposed by Archibald (2004) and Forryan (2004a). Three risk assessment factors were identified: *relative importance* (impact on operations if knowledge was lost), *rarity* (do other people in the organisation have similar knowledge? How specific is the knowledge to the organisation and the role?) and *difficulty of recovery* (estimated period of time and resources needed to recover the knowledge if lost). These three factors combined gave an overall knowledge risk rating. This was then used to identify and prioritise the knowledge, experience and skills that had to be focused on during the knowledge transfer workshops.

Step 2: Design and deliver knowledge transfer workshops (KTWs)

The Knowledge Transfer Workshops (KTWs) technique was introduced at HSBC, based on a combination and adaptation from Skyrme (2001), Knowledge Harvesting Inc (2003), Archibald (2004) and Gordon (2005).

The following is a list of recommended actions for the facilitator to take prior to each KTW. The author, as facilitator, applied these at HSBC.

- Identify the reasons for the knowledge holder's departure. These need to be taken into consideration when deciding the approach to deliver the KTW.
- Consider the knowledge recipient's background and specific knowledge needs
- Identify what level of knowledge transfer, if any, has already occurred
- Become familiar with the subject area and specialist vocabulary of the knowledge holder in order to understand mental models etc. and therefore be able to elicit knowledge more effectively
- Prepare targeted questions to ask the knowledge holder, based on the defined priorities for knowledge transfer. A list of typical questions used during the KTWs at HSBC is available in Appendix B.
- Ensure that technology enablers are in place, e.g. flip chart for knowledge holder to draw diagrams if relevant, projector for "on-the-fly" visual verification of accuracy of captured knowledge, digital voice recording for scripting (for scripting, if appropriate), etc.

The recommended attendees for the KTW are the knowledge holder, the facilitator, the main knowledge recipient (job successor) and/or the knowledge mediator. Optional attendees would include the line manager and anyone else who may benefit as an additional knowledge recipient.

The following is a list of recommended actions for the facilitator to perform during the KTW. As with the previous list of recommendations, the author, as facilitator, applied these at HSBC.

- Provide an overview and clarify objectives of the KTW in order to address any potential concerns about the effectiveness of the process
- Present a structure and timeline for the KTW participants to follow
- Provide guidance to participants so as to keep the focus on high-priority knowledge

- Explore major pitfalls and lessons learnt from mistakes
- Capture and prioritise names of key contacts (internal/external individuals and teams) that provide support and share/exchange knowledge that is critical for performing the job
- Capture suggestions for improvement that are based on experience of the role and the company, e.g. what good ideas have remained unimplemented?

Step 3: For each KTW, capture the outputs in a knowledge harvest report (KHR)

The purpose of producing a knowledge harvest report (KHR) is threefold: to capture the outputs on the KTW so that they can be verified, to provide a documented point of future reference for the knowledge recipient and to document the suggestions for improvement to business performance.

KHRs present a combination of "codified knowledge" as well as "metadata about critical tacit knowledge" that the business has to protect. Kelleher (2006) defines the latter as *metadocuments* and states *"Metadocuments are simply, highest-level documents. These contain as much relevant information about a person's knowledge and experience as possible"*. The KHR can also be used to support the recruitment process, in the case where a successor has not yet been identified.

Step 4: Handover KHRs to corresponding job leavers for review / editing

The KHRs are handed over to each corresponding job leaver (knowledge holder) for review and editing, prior to distribution to the knowledge recipient and/or knowledge mediator. It's also worth noting that, in the case where a job successor has not yet been identified, it may be necessary to follow a knowledge debrief process. The purpose of this would be to help the knowledge recipient to understand and interpret the KHR correctly - especially if he/she had not attended the KTW. Kelleher (2006) agrees with this approach by stating *"the knowledge debrief process clearly requires facilitation and the explicit alignment with the induction of new staff and/or the diffusion of the knowledge amongst remaining staff"*.

Step 5: Identify and implement opportunities for improvement based on the KHRs

One of the key components of the KHR is a list of recommended improvements, based on the experiences of the job leaver (knowledge holder). The responsibility for applying these suggested improvements is passed on to the job successor (knowledge recipient) and his/her line manager.

This five-step approach has focused primarily on the transfer of tacit knowledge, because this was considered by HSBC to be of the highest value and because available time and resources were finite, so tacit knowledge had to be given priority. However, it would seem incomplete to not at least mention how explicit knowledge was transferred. Wherever possible, the knowledge holder would provide access to relevant documents (electronic and printed), business e-mails, notes etc. The main observation made was that these were often difficult to comprehend, often due to the fact that they contained specialist terminology. In addition, it was often challenging to understand the way in which the documents were structured and grouped (a.k.a. their "ontology" or "taxonomy"). This raised the interesting question of 'how to effectively "decodify" explicit knowledge?'. Although this topic is considered out of scope for this thesis, it is discussed further as part of the recommendations for future research in Chapter 10.

## 7.6 Securing senior support and defining the success criteria

This section describes the application of GOKM step 6 (*secure senior support and sponsorship based on the business case from step 5*) and GOKM step 7 (*define measurable success criteria based on the goals or problems to be addressed*).

As previously mentioned in section 7.3, HSBC did not require a business case to be produced, nor did senior management need to be persuaded about the value added by the knowledge transfer exercise. This was because Steve had done a lot of this preparatory work.

In terms of adapting to corporate vocabulary, one of the most common expressions used in HSBC during this exercise was "knowledge based working". This observation, along with the fact that there was no need for a business case for the knowledge transfer exercise, provided some initial indication that HSBC's organisational maturity in terms of KM was higher than that discovered when first entering Danwood (Chapter 4 and Chapter 6). The concept of "KM maturity" is discussed further in section 7.7.1.

As previously mentioned in section 7.3, HSBC on this occasion did not require "hard cost indicators" or quantitative data to be persuaded about the value added by the knowledge transfer exercise. Therefore the success criteria were primarily focused on qualitative data and more specifically, feedback from study participants about the value added by the knowledge transfer initiative.

## 7.7 Implementation of the knowledge transfer initiative

This section describes the application of GOKM step 8 (*identify the predominant organisational culture and how this will impact on the approach*), GOKM step 9 (*gain workforce buy-in, based on the organisational culture identified from step 8*), GOKM step 10 (*identify suitable reward and/or recognition systems to encourage participation in the KM initiative*) and GOKM step 11 (*implement the KM initiative in a pilot scope*).

### 7.7.1 The HSBC organisational culture and "KM maturity"

In order to identify the predominant features of HSBC's organisational culture, a similar approach to that presented in Chapter 6 was followed. Based on this and due to similar time constraints, the author provided an individual assessment based on one-to-one interviews and discussions with the holders of the six key positions that have been presented in section 7.3. This led to the high-level conclusion that HSBC predominantly demonstrated the Role Culture in Handy's (1985) typology (presented in Chapter 5), which is characterised by bureaucracy and where rules, procedures and job descriptions tend to predominate. As per the GOKM methodology, the predominant organisational

culture has to be taken into consideration and the KM initiative has to be adapted accordingly. As mentioned in section 7.6, HSBC demonstrated a higher level of "KM maturity" during the initial observations, in comparison to Danwood. But what does "KM maturity" mean? The suggestion is that KM maturity can be assessed by reviewing existing KM activities as well as whether the organisational culture is "KM friendly". In summary, the basic formula would be as follows:

*KM Maturity = existing KM activities + organisational culture*

The development of a full-scale, comprehensive and robust KM maturity assessment tool is likely to require a significant amount of time and resources. The industry-based KM case studies presented in this thesis are already likely to exceed the timeframe that is normally expected for doctoral research at Loughborough University. Therefore, the suggestion is that KM maturity assessment forms part of recommendations for future research (presented in section 10.3.3). Nevertheless, it is important to recognise how organisational KM maturity can influence the approach to designing and implementing a KM initiative. In the case of HSBC, existing KM activities such as previous attempts to perform knowledge capture interviews, the use of corporate vocabulary such as "knowledge based working" and the KM friendly culture that was experienced by the author, all indicated that HSBC's KM maturity level was relatively high. This would mean that the focus could be set on more advanced KM methods rather than having to "introduce" the organisation to KM. However, it is also important to recognise that the above method of assessing KM maturity depends on subjective judgement and is mainly there as a guideline rather than a firm rule.

### 7.7.2 Securing workforce commitment

As previously identified in Chapter 5, securing workforce commitment is an important factor in the success of a KM initiative and therefore vital to the success of this knowledge transfer exercise. Participating in interviews and KTWs, reviewing the outputs and staying in contact after leaving are all

laborious and time-consuming exercises that require a significant level of commitment. It is also important to recognise that the circumstances for leaving the position, e.g. retirement, maternity leave, moving position internally, moving position externally, severance, etc., are likely to play an important role in defining the level of employee commitment to the exercise.

In this particular case study, securing workforce commitment was relatively straightforward. This was because a.) there were few people involved, b.) because the initiative had been clearly mandated by senior management. Nevertheless, it was still necessary in many cases to explain the purpose, objectives and expected benefits of the exercise to those involved, in order to gain their full commitment. In addition, further steps were taken to encourage maximum collaboration, e.g. preparing well before each workshop so as to maximise the use of each participant's time, ensuring that their contribution was visible to senior management, etc. The approach to reward and recognition for knowledge sharing is discussed in the following section.

### 7.7.3 Reward and recognition for knowledge sharing

The subject of reward and recognition for knowledge sharing is highly complex. This was briefly covered in Chapter 6, where recognition was advocated instead of monetary reward. Just like in the case study at Danwood, HSBC's management agreed that non-monetary rewards should be preferred. Some of the incentives offered were: formal recognition in a reference letter, free membership of professional networking organisation, extra holidays (time off in lieu), priority access to the latest professional development courses and more. A very interesting discovery was that all participants stated that, despite the fact that they appreciated these non-monetary incentives, they would have participated in the exercise even if the incentives had not been offered. This is perhaps another indicator of the relatively high level of HSBC's KM maturity.

### 7.7.4 Implementation of the knowledge transfer workshops

The knowledge harvest workshops (KTWs) were delivered over a period of six months. This section provides an overview of the context for each knowledge transfer exercise. A significant amount of outputs were captured after each workshop, which were then translated into a corresponding knowledge harvest report (KHR). A sample KHR is available in Appendix C.

*Leadership Development Programmes Senior Manager*

*Leaver: Gareth*

*Successor: James*

Gareth - a senior manager that had lead the design and delivery of pioneering leadership development programmes, was moving from his role as *Senior Manager, Leadership Development Programmes (LDP)* to a new role within HSBC. His successor, James, also a senior manager, had a background in investment banking and had headed up training and graduate recruitment for one of HSBC's business areas. The major aims of this knowledge harvest exercise were to identify and prioritise the most significant aspects of the role, facilitate the direct transfer of tacit knowledge and experience from Gareth to James, produce a list of practical hints and tips, identify key contacts that support the LDP function and produce a list of suggestions for change in order to enhance operational performance.

*Leadership Development Programmes Manager*

*Leaver: Tracey*

After having designed and delivered many pioneering training programmes in leadership development on a global scale, Tracey was moving to a new role within HSBC. Tracey's move presented a significant problem in identifying a suitable successor. Therefore, the main purpose of the exercise was to capture key experience and knowledge that could be passed on to the successor, as well as aid the recruitment process.

*Group PCM (Payments and Cash Management) Training Manager*

*Leaver: Jeremy*

*Successor: Simon*

Jeremy, a highly regarded expert in the field of PCM with significant practical knowledge and experience, was moving to a new role within HSBC. Jeremy's knowledge and experience enabled him to create and deliver high-value training courses. His move presented a significant problem in identifying a suitable successor. The purpose of this exercise was to capture key knowledge and experience to be passed on to the successor and support the recruitment process by highlighting the most significant knowledge that was at risk. During the course of the exercise, a suitable successor was identified (Simon) and a follow-up workshop took place with both Jeremy and Simon.

*Regulatory and Operational Support Manager*

*Leaver: Catherine*

*Successor: Keith*

Catherine was going on maternity leave. Catherine had been the technical support manager, providing a key reference point for questions about a variety of technical, regulatory and tax issues. A suitable temporary successor (Keith) had been identified but was not available for interview due to being on annual leave. Therefore the primary purpose of the exercise was to capture key experience from Catherine and pass it on to Keith so as to help him perform the role until Catherine's return.

*Reconciliations Manager*

*Leaver: Margaret*

Margaret was retiring. Margaret had been responsible for the team that reconciles cash and stock changes against business processing, thus ensuring that all changes are reconciled, including back accounts. Margaret's team was also responsible for Inland Revenue returns. A suitable successor had not yet been identified, so the purpose of the exercise was to capture some key experience to pass on, as well as build a KHR to support the recruitment process.

*Register Maintenance Manager*

*Leaver: Josephine*

Josephine was taking early retirement due to a departmental merger. Josephine had been responsible for the team that managed over one million ISA accounts and produced key reports that ensured that HSBC complied with FSA (Financial Services Authority) regulations. A number of suitable successors had been identified, however, a decision had not been reached yet so the primary purpose of the exercise was to capture some key experiences to be passed on to the successor when he/she would be announced.

For each completed KTW and corresponding KHR there was a follow-up review arranged with the knowledge holders, which resulted in refinement of the KHRs prior to distribution to the knowledge recipients. In addition, each exercise also generated a list of suggested operational improvements to business processes. These formed part of the evaluation of GOKM's impact at HSBC, as discussed in section 7.8.

### 7.7.5 Review of the implementation of KTWs at HSBC

The application of the KTW technique at HSBC received, overall, positive feedback from participants and sponsors. Another strong indicator of KTW success was the fact that the technique continued to be used after the pilot and after the departure of the author from HSBC. This is discussed further in section 7.8.1. Following the application of the KTW technique in the pilot scope at HSBC, some lessons were captured that could be useful to facilitators of future KTWs:

1. If participants demonstrate a lack of enthusiasm to participate in the KTW, try to understand the reasons behind the behaviour and how it might be resolved as soon as possible. This was learnt during one of the KTWs, where the knowledge recipient was demonstrating this kind of resistance. It soon became apparent that the knowledge recipient had not been adequately briefed prior to the KTW. By receiving a short on-the-spot briefing, followed by a gradual build-up of confidence in the process during the KTW, the knowledge recipient's resistance to collaborate was dealt with to a satisfactory level.

2. Wherever possible, it may be useful to understand the professional relationship between the knowledge holder and knowledge recipient, prior to the KTW, in order to adapt accordingly. This lesson originated from the experience of facilitating a KTW where there was negative "tension" between knowledge holder and knowledge recipient. In this case, the facilitator had to steer the conversation away from unproductive debates and keep it focused on the transfer of priority knowledge. It is likely that the effectiveness of the KTW on this occasion was unable to reach its full potential. However, the outputs were still deemed satisfactory by the participants.

3. Avoid direct dictation by the knowledge holder of what should be written in the outputs of the workshop. Instead it is better to listen, interpret, summarise in a few lines and ask the knowledge holder for confirmation that it accurately represents the knowledge being transferred. This approach was more time-efficient and increased the accuracy of the outputs. Also, this approach helped to avoid deviating away from the critical topics, as it is generally normal for knowledge holders to leapfrog between topics if the facilitator does not provide adequate guidance.

4. Knowledge transfer tends to be a strenuous activity for the brain and therefore, in order to avoid the effects of fatigue during the KTWs, it is recommended that the duration of each session is carefully managed. More specifically, following various lengths of session times, the conclusion was that two hours was the optimum duration. If more than two hours were needed then it would be better to arrange a separate session. Gordon (2005) describes a similar conclusion by stating: *"more than 2 hours and fatigue will become an issue. In many cases the information to be gathered suggests that much longer than two hours is needed. In such cases it is better to plan a series of separate interviews that may be different in nature".*

5. It is recommended that the facilitator ensures that key outputs are captured as notes during the KTW so as to feed them into the KHR. Even though this may be challenging, i.e. to facilitate and take notes at the same time, it is a

worthwhile effort. This was learnt when, during one of the KTWs, the author decided to focus only on the facilitation and recorded the entire conversation on a voice recorder, with the intention of listening to the playback and making notes at a later stage. This approach had three main disadvantages: it was very laborious and time-consuming; it was difficult to recollect some of the context and points that were being made at the time of the KTW and this had the knock-on effect of reducing the accuracy of the KHR.

## 7.8 Evaluation of the success of GOKM and future direction at HSBC

This section describes the application of GOKM step 12 (*evaluate the success of the pilot against the defined criteria from step 7 and highlight additional benefits*) and GOKM step 13 (*use the proven success to facilitate a wider roll out of the solution and to promote new proposals to solve further problems*).

As previously mentioned in section 7.6, the success criteria required by HSBC on this occasion were focused on qualitative data and more specifically, feedback from study participants about the value added by the knowledge transfer initiative. All participants, including knowledge holders, knowledge mediators, knowledge recipients and line managers were asked to provide feedback on their experience of the knowledge transfer initiative and whether they thought that it added value. In addition, knowledge recipients were specifically asked whether they thought there was a reduction in their time-to-competency for the new role that they had taken up. The overall feedback was very positive. The following is a list of feedback quotations from study participants:

*"The knowledge transfer workshops and knowledge harvest reports were the most effective that I've seen so far and a significant improvement to previous attempts. I've also received positive feedback from all participating stakeholders"*

– Steve, *Senior Learning and Development Consultant*

*"The knowledge transfer workshop was a very productive exercise. I was actually surprised by how much knowledge and experience was revealed, which is easy to go unnoticed on a day-to-day basis. I would like to see these workshops applied on a wider basis"*
– Tracey, *Leadership Development Programmes Manager*

*"A very useful exercise that has helped me to identify my most marketable skills while also helping my successor"*
– Jeremy, *Group Training Manager, Payments and Cash Management*

*"The knowledge workshop and harvest report will surely help me get off the ground a lot faster in my new role"*
– Simon (successor of Jeremy)

*"A value-adding exercise that I would be happy to repeat"*
– Josephine, *Register Maintenance Manager*

In addition to the positive feedback from participants, there were also additional benefits delivered, such as:

- Participants recognised that the knowledge harvest reports (as demonstrated in Appendix C) were more content-rich than the outputs of previous knowledge transfer attempts that were mentioned in section 7.3 and demonstrated in Appendix A.
- The KTWs highlighted significant opportunities to improve business performance, based on the experience-based recommendations of the knowledge holders. These recommendations were captured as part of the KHR. A sample of such recommendations is available in Appendix D.
- The scope of knowledge transfer was expanded to cover a wider audience and created the opportunity to reduce operational costs and time-to-competency in new business centres in India and Brazil (more details are provided in section 7.8.1).

### 7.8.1 The next stage of application of GOKM at HSBC

GOKM was first applied at HSBC with a small pilot project where the focus was on knowledge transfer between individuals and small teams. The success of the pilot attracted attention from other senior managers who were faced with a wider challenge. HSBC had successfully migrated simple business processes to new processing centres in India and Brazil. These business processes were simple enough to be able to explain with the use of basic manuals. However, the migration was much more difficult to achieve when dealing with complex business processes that required tacit knowledge transfer. The original plan was to send a large number of expatriates to India and Brazil in order to perform the knowledge transfer gradually. However, the projected costs were very high, due to the high salaries, travel expenses and extra benefits that are often expected to be offered to expatriates to work abroad. Following the success of the GOKM pilot, the alternative plan suggested was to use KTWs to transfer knowledge to a smaller team of expatriates who would be trained in the KTWs approach. This would significantly reduce the operational cost as well as reduce the average time-to-competency. The author's role was to act as a consultant in this case and to train the project leader of the business process migration (Eirian) in order for her to propagate the approach to her team. From this point onwards, Eirian and her team could follow the GOKM approach independently. After this point the project became out of scope for this thesis as HSBC was only willing to release a small sample of research data.

## 7.9 GOKM methodology review after implementation at HSBC

The purpose of this section is to revisit the GOKM methodology and explain how the implementation at HSBC has helped to further refine the methodology. As previously mentioned in Chapter 6, this is in line with the grounded theory approach that emphasises the need for theories to be grounded in empirical reality, by providing an iterative loop for theory, checking and refinement.

### 7.9.1 The refinement of the GOKM methodology

Following the implementation at HSBC and taking into account the key research findings, the GOKM methodology has been revised as follows (**amendments appear in bold font**):

1. Identify one or more strategic goals or operational problems that are of significant priority to the organisation and can be supported by a KM initiative

   **1.1 The scope/size of the problem can have an impact on short vs. long term KM strategy, so application of GOKM has to be adapted, i.e. which steps and to what extent to be applied.**

2. **If required,** assess the impact of the goals or problems, including an estimate of the associated costs and benefits. **If estimate of costs is impractical or less relevant, use other metrics, depending on the KM maturity of the organisation and the expectations of senior stakeholders.**

3. Carry out a scoped knowledge audit to identify the knowledge gaps that are contributing to the problem or will help to deliver the goal if closed **or to identify knowledge that is at risk**

   3.1 Consider the technology enablers that will need to be put in place in order to carry out the scoped knowledge audit

4. Design a KM initiative that focuses on addressing the specific goals or problems

   4.1 Consider technology enablers that will need to be put in place in order to implement the initiative

   4.2 If applicable, consider the necessary adjustments to organisational structure and processes

   4.3 If applicable, consider any implications on human resource management and development

5. **If required,** prepare a business case that justifies the cost of implementing the solution by comparing it with the costs and benefits, derived in step 2, **or by other metrics if costs are not being used**

6. Secure senior support and sponsorship based on the business case from step 5

   6.1 Adapt to corporate language when engaging with senior management

7. Define measurable success criteria (e.g. cost, time, **HR performance metrics** etc.) based on the goals or problems to be addressed

8. Identify the predominant organisational culture **and KM maturity** and how these will impact on the approach

9. Gain workforce buy-in, based on the organisational culture **and KM maturity** identified from step 8

   9.1 Adapt to corporate language when engaging with the workforce

   9.2 Identify potential knowledge champions

   9.3 Develop managers as KM facilitators

10. Identify suitable reward and/or recognition systems to encourage participation in the KM initiative

11. Implement the KM initiative in a pilot scope

12. Evaluate the success of the pilot against the defined criteria from step 7 and highlight additional benefits

13. Use the proven success to facilitate a wider roll out of the solution **with a gradual expansion of scope** and to promote new proposals to solve further problems.

The next stage of this research project was to continue to test the refined GOKM methodology in yet another business environment. The author and his research supervisors leveraged more business relationships and seized the opportunity to implement and evaluate GOKM at Halifax Bank of Scotland (HBOS), as presented in Chapter 8.

## 7.10 Summary

This chapter has illustrated the application of the refined GOKM methodology in a case study that took place at HSBC Bank. The problem to be addressed was the loss of critical business knowledge and experience each time an employee left their position - especially in the case of senior management. Six key positions were identified as requiring urgent attention and this provided the scope for a knowledge audit, which revealed the critical business knowledge that was at risk. A five-step knowledge transfer initiative was designed and implemented, which utilised knowledge transfer workshops and produced knowledge harvest reports, in order to minimise the loss of critical knowledge. Key observations and lessons learnt from the implementation were discussed and the GOKM methodology was reviewed and further refined.

This chapter has contributed towards the achievement of Objective 6 (*implement the refined goal-oriented KM methodology in other industry settings in order to test its applicability and scalability in a wider business context*). Chapter 8 contributes further towards the achievement of Objective 6 by demonstrating the implementation and evaluation of GOKM at HBOS Bank.

# Chapter 8: Case Study of GOKM at HBOS

*"KM refers to identifying and leveraging the collective knowledge to help the organisation compete in uncertainty"*

*** Georg von Krogh ***

## 8.1 Chapter overview

This chapter presents the implementation of the refined GOKM methodology in a third case study, this time at HBOS Bank. The author was placed in the Group IT department and, following analysis, discovered a significant misalignment between the IT portfolio and the business strategy. A knowledge audit of how Group IT engaged with business divisions and how the IT portfolio was planned and managed revealed inefficiencies in these processes. This led to the design and implementation of a KM initiative that consisted of three key components: a shared project portfolio between Group IT and other business divisions, a knowledge-driven method for managing work requests and a knowledge-based method for gathering business requirements. The key observations and lessons learnt from the implementation are discussed and, once again, the GOKM methodology is reviewed and refined.

## 8.2 Company profile: HBOS Group

In January 2009, HBOS was acquired by Lloyds Banking Group plc. However, for the purpose of this thesis, it has been deemed more appropriate to describe the state of the organisation during and up until the end of this case study (August 2008), which was before the acquisition by Lloyds.

The HBOS Group provided retail, business and corporate banking and insurance and investment services through its multi-brand strategy in the UK and internationally.

Approximately 72,000 people were employed across the Group, while HBOS also had the biggest private shareholder base in the UK (HBOS, 2008).

HBOS was the UK's largest mortgage and savings provider and the top provider of new investment products (HBOS, 2008). The Group was one of the UK's leading general insurers and provided business banking and corporate finance, delivering innovative funding solutions across a range of markets.

## 8.3 Problem analysis: "Aligning the IT project portfolio with the business strategy"

This section describes the application of GOKM step 1 (*identify one or more strategic goals or operational problems that are of significant priority to the organisation and can be supported by a KM initiative*) and GOKM step 2 (*if required, assess the impact of the goals or problems, including an estimate of the associated costs and benefits. If estimate of costs is impractical or less relevant, use other metrics, depending on the KM maturity of the organisation and the expectations of senior stakeholders*).

The HBOS IT service is divided into three main departments: Group IT, Corporate IT and Retail IT. The author was employed in Group IT (the largest of the three IT departments) to carry out various business analysis tasks while also seeking opportunities to test and evaluate GOKM in a third organisation, following up from the case studies at Danwood and HSBC.

The first step in the application of GOKM at HBOS was to identify a significant goal or problem that could be fully or partially addressed by a KM initiative. Following meetings with senior IT managers as well as managers from the core business divisions (referred to as "business managers" in HBOS) it was highlighted that there seemed to be a significant gap between the needs of business managers and the actual IT portfolio that was being delivered. A comparative analysis of the IT portfolio and the business portfolio confirmed this perception. The most common explanation for this phenomenon, given by all managers (both business and IT), was that there was a lack of knowledge exchange between departments due to the "federated" HBOS operating model (a.k.a. "matrix organisation").

In a department that spends a very significant amount of money (exact amount could not be disclosed for legal reasons) on IT investment, the misalignment of business and IT portfolios would clearly have a substantial financial impact. Although Group IT's senior management had quantitatively measured the financial impact, it could not be disclosed in this thesis. However, it was made clear that this misalignment had to be dealt with as a matter of priority. In addition, further "pressure" was added to the situation due to the severe market conditions. The first signs of the global financial "credit crunch" were emerging and the forecast was bleak. This put Group IT's leadership under extra strain to deliver more benefits with less resources. Therefore, the alignment of the IT portfolio to the business strategy was even more critical. The problem of lack of knowledge exchange between IT and business divisions provided an excellent opportunity to test the GOKM methodology as a third case study. Interestingly, Shaw et al. (2007) state: *"a firm's strategic approach to KM should survive an episode of crisis rather than be dropped from the agenda. However, we have been unable to find any empirical research on firms which have incorporated strategic KM into the process of crisis management"*. Therefore, the application of GOKM at HBOS during the "credit crunch" was also a novelty in the sense that very few such studies seem to exist in current KM literature.

The next step was to conduct a knowledge audit of how Group IT engaged with business divisions and how the IT portfolio was planned and managed. The importance and priority of IT-Business engagement was also highlighted by one of HBOS's key strategic research providers – the CIO Executive Board (CEB). A relevant sample of their research-based recommendations is demonstrated in Figure 8.1. Specifically the business divisions that required particular attention, according to senior Group IT management, were Group HR and Business Services. This provided the scope for the initial application of GOKM at HBOS.

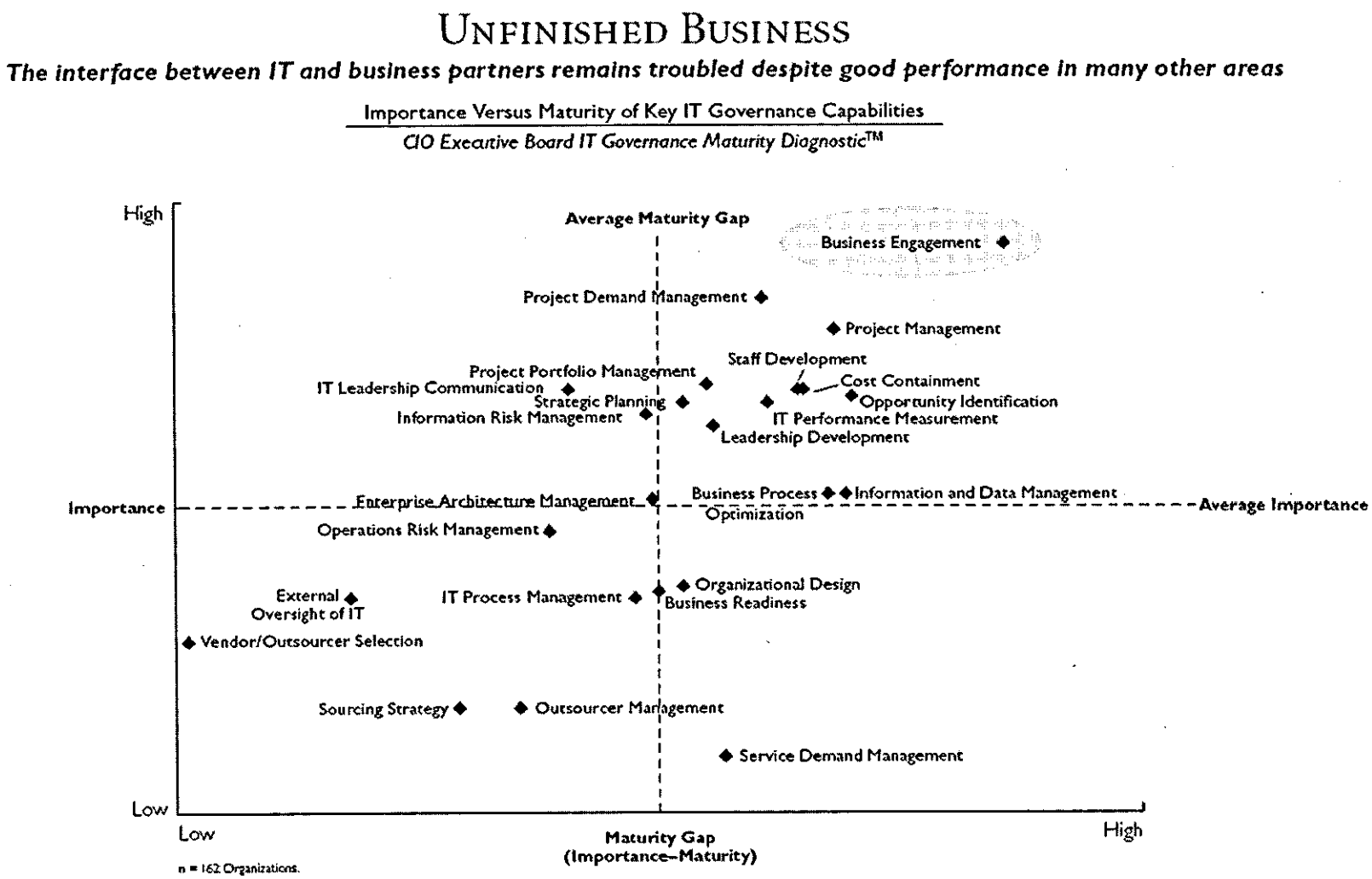


Figure 8.1: The importance and priority of IT-Business engagement, as highlighted by CEB (2007)

## 8.4 Scoped knowledge audit of business engagement and portfolio management

This section describes the application of GOKM step 3 (*carry out a scoped knowledge audit to identify the knowledge gaps that are contributing to the problem or will help to deliver the goal if closed or to identify knowledge that is at risk*).

The purpose of this scoped knowledge audit was to identify the knowledge gaps that were contributing to the misalignment between the IT portfolio and the business strategy.

### 8.4.1 Knowledge audit approach

The knowledge audit was conducted via a series of workshops with business and IT managers in order to understand the way in which they engage for the initiation and delivery of IT projects as well as how the IT portfolio is managed and how knowledge of business strategy is shared between senior business managers and their peers in IT. Standard technology enablers were used, such as laptop, projector and MS Office/Visio software.

### 8.4.2 Outputs of the knowledge audit

Samples of the outputs of the knowledge audit are unavailable in this case due to a non-disclosure requirement to not publish documents that contain sensitive financial data (e.g. IT portfolio). However, it can be revealed that analysis of these outputs highlighted the following inefficiencies in the engagement and portfolio management processes:

- No single point of contact / manager / owner of managing project initiation requests
- Incomplete stakeholder analysis / involvement of key knowledge holders at initiation of new projects
- Project proposals based on limited knowledge of business requirements and without enough consideration on wider impact / dependencies on other projects

- Lack of clarity of IT and business accountabilities in the project initiation process
- Lack of visibility of business strategy for IT managers and IT strategy for business managers, leading to difficulties in prioritisation of project portfolio
- Separate views of the project portfolio maintained by Group IT and business divisions, leading to misalignment
- Separate monthly portfolio review meetings held by Group IT and business divisions

The following section demonstrates how a knowledge-based solution was designed and implemented in order to address the aforementioned inefficiencies.

## 8.5 Designing a knowledge-based solution to improve business engagement and portfolio management

This section describes the application of GOKM step 4 (*design a KM initiative that focuses on addressing the specific goals or problems*) and GOKM step 5 (*if required, prepare a business case that justifies the cost of implementing the solution by comparing it with the costs and benefits, derived in step 2, or by other metrics if costs are not being used*).

### 8.5.1 Approach to designing a solution

The approach taken to design a solution for the improvement of business engagement and portfolio management has been to produce new knowledge-centric process models, in collaboration with the people that are directly involved and impacted by these processes, in order to address the specific inefficiencies that have been highlighted in section 8.4.2.

### 8.5.2 The proposed solution

The proposed solution for improving business engagement and aligning the IT project portfolio to the business strategy consisted of three key components:

- *Shared IT portfolio between Group IT and business divisions*

A single, shared document containing all the IT portfolio information, including priorities, scheduling, financial data, accountabilities etc. was created and made available to all relevant parties on a shared network (by utilising Microsoft SharePoint technology). This document became known as "Single Version of the Truth (SVOT)". A sample of the SVOT document has not been included as an Appendix because it would contain sensitive financial data that could not be disclosed. An overview of the process is demonstrated in Figure 8.2.

- *Managing new work requests and the project pipeline*

The management of new IT work requests was a significant contributor to the problem of misalignment between Business and IT portfolios. This was due to the fact that work requests were received through a variety of channels, e.g. by phone, e-mail, printed forms, face-to-face, etc. and these requests were not managed and prioritised by one person or team, i.e. there was no clear accountability or ownership of the process. Therefore a new approach was proposed, as demonstrated in Figure 8.3, which was based on knowledge gained from interviews and workshops with experienced HBOS business and IT managers and analysts. This also led to the proposal and implementation of a new model for managing the project pipeline, as demonstrated in Figure 8.4.

- *Knowledge-based requirements definition process and workshops*

The way in which project requirements were defined also made a contribution towards the misalignment between the IT portfolio and the business strategy. Requirements were often defined as a general description on a form or in an e-mail and would be sent to a shared mailbox. Each request would be picked up by an assigned analyst who would try to interpret the requirements and then send back questions for clarification. Due to resource constraints, an average of eight weeks was needed for the analyst to provide an estimated cost and timescale for the implementation of the requirements back to the requestor. This was considered inadequate by business managers, as this delay would often have an impact on their own decision making process. Two months was just too long to wait – especially in a highly competitive environment such as

banking. In addition, the quality of the requirements definition was considered below standard, because the process for producing them was cumbersome. In some cases, requirements had become out-of-date because the business strategy had moved on. For these reasons, following consultation and workshops with business and IT managers and analysts, a new method for collecting requirements was proposed and implemented, as demonstrated in Figure 8.5. The purpose of the new approach was to maximise the knowledge inputs of all relevant parties and also reduce the average time of providing an IT estimate of project costs and timescales. Part of the design of the new process involved the running of requirements-gathering workshops. A significant part of the success of the new process was considered to be resting on running successful requirements-gathering workshops, i.e. to ensure that critical knowledge flows between all relevant parties. Participants from the business divisions would be asked to contribute knowledge about business strategy and participants from Group IT would be asked to contribute technical knowledge about the feasibility of the requirements. It was very important to get the right balance of participants in these workshops, i.e. participants that have the necessary knowledge as well as empowerment to make strategic decisions on behalf of key stakeholder groups. Figure 8.6 demonstrates the design of these workshops.

The expectation was that this collection of new processes, if fully implemented and integrated into day-to-day work at HBOS, would create a more knowledge-driven environment for business engagement and would result in a significant re-alignment of the IT project portfolio to the business strategy. This collection of models was approved by senior management in Group IT and participating business divisions (Group HR and Business Services).

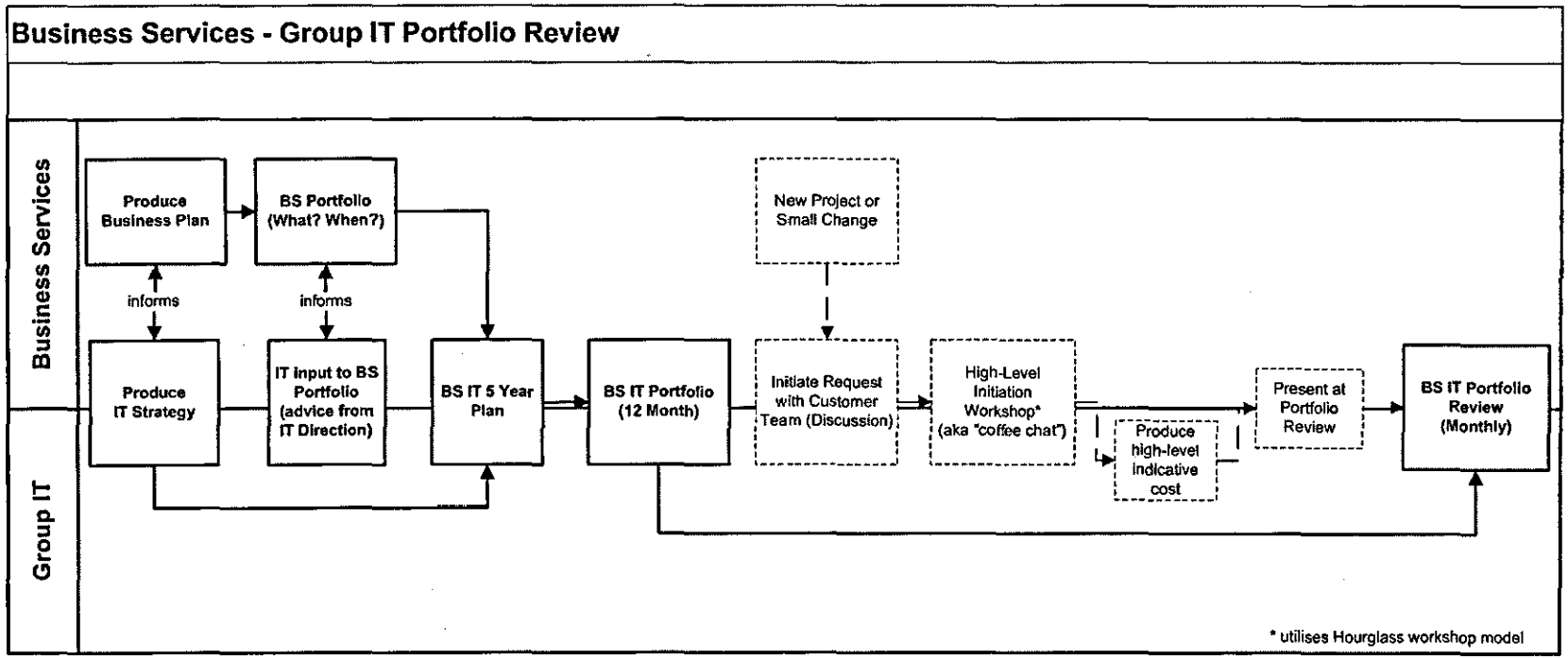


Figure 8.2: The proposed method for jointly managing the IT portfolio (in this example with Business Services)

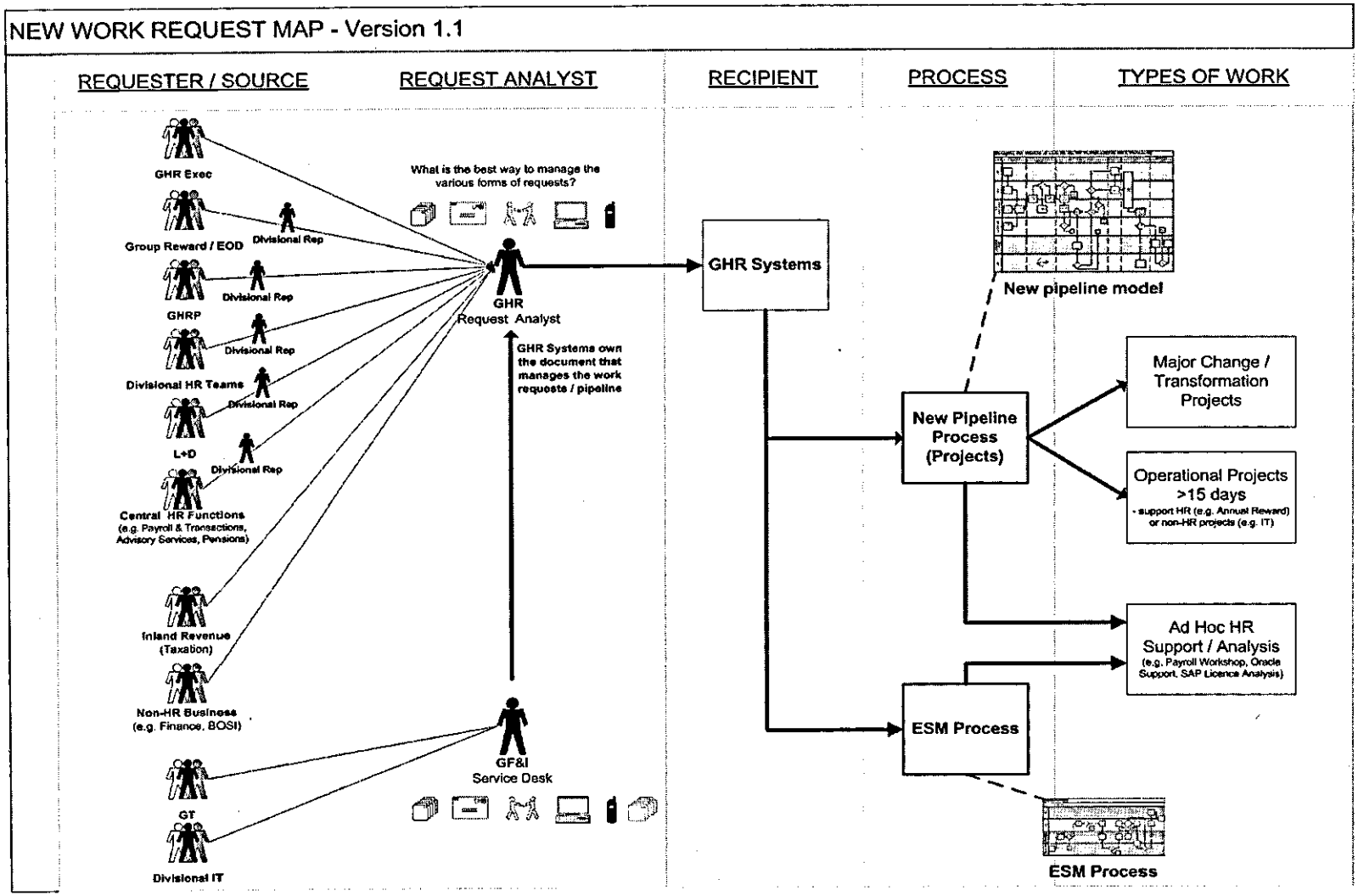


Figure 8.3: The proposed method for managing new work requests (in this example from Group HR)

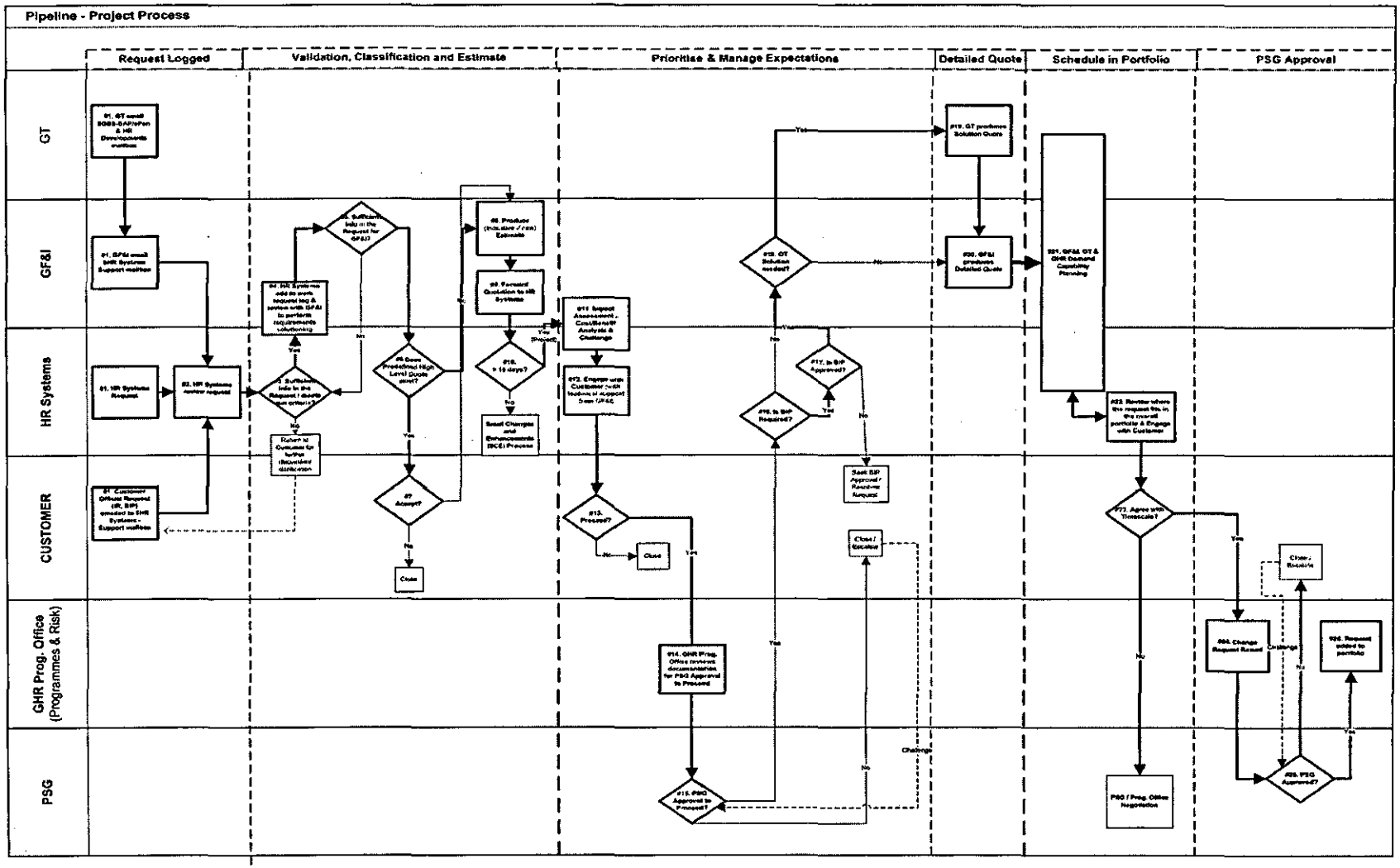


Figure 8.4: The proposed method for managing the project pipeline (in this example with Group HR)

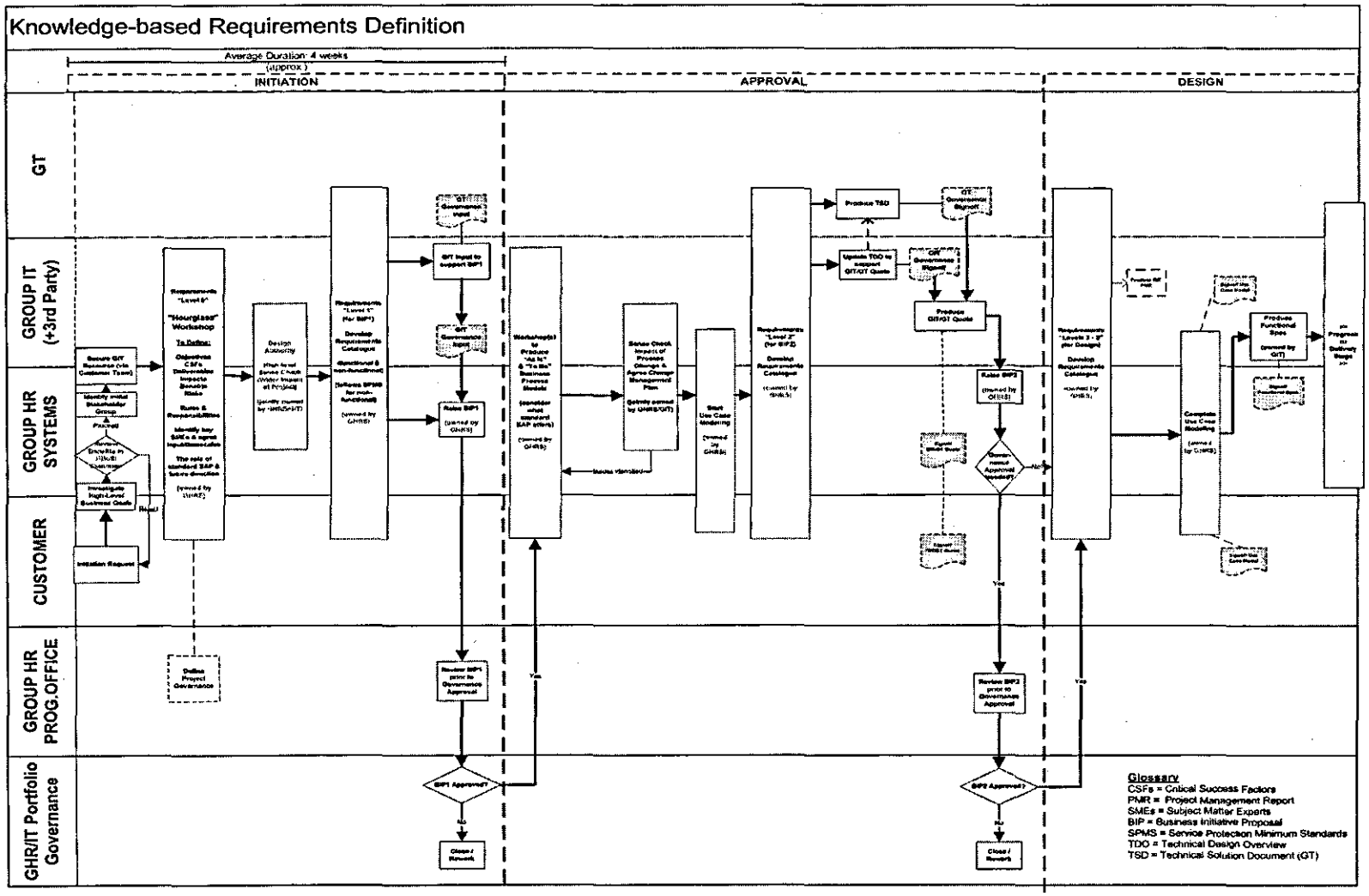


Figure 8.5: The proposed method for capturing business knowledge / requirements

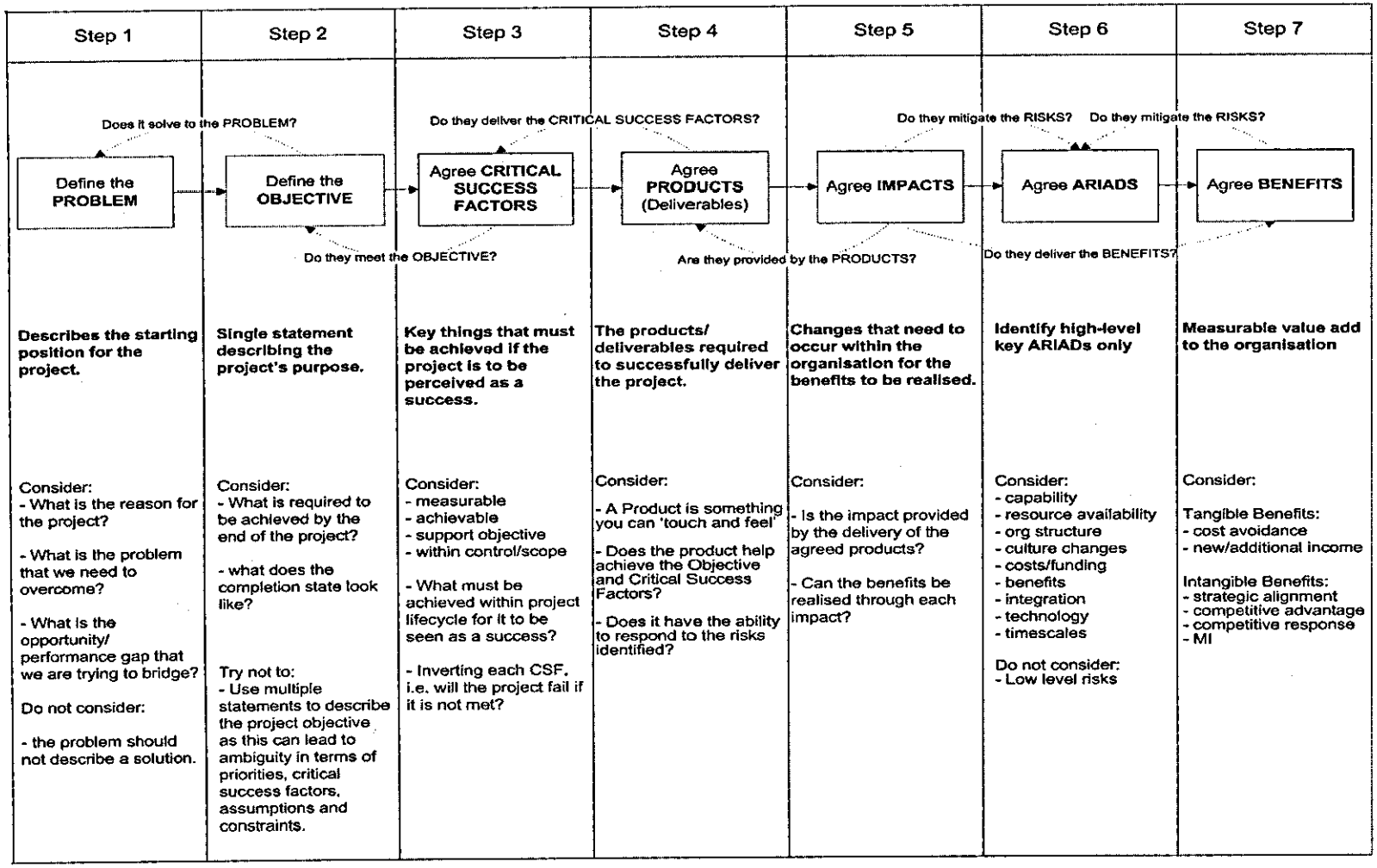


Figure 8.6: The proposed method for running knowledge-driven requirements definition workshops (adapted and combined from methods used in Retail IT and Group HR Systems)

### 8.5.3 The business case for the new knowledge-driven engagement and portfolio management processes

Preparing the business case that would justify the cost of this exercise was a relatively easy task on this occasion. This was because the level of detail required was relatively low, because the senior managers involved were fully aware of the aforementioned problems and therefore only required a basic document to be produced for audit purposes rather than as a tool to be used for persuasion. However, despite the lack of a need for very detailed data, there was a wider audience to persuade other than just the sponsors of the project. This is explained in further detail in the following section.

## 8.6 Securing senior support and defining the success criteria

This section describes the application of GOKM step 6 (*secure senior support and sponsorship based on the business case from step 5*) and GOKM step 7 (*define measurable success criteria based on the goals or problems to be addressed*).

In this particular case study, there was a wider audience of senior managers that needed to be persuaded to support the project. This was because the changes that were being suggested would have an impact on how people work in other departments (e.g. Group HR and Business Services) and not just in Group IT. The method used was to design and deliver a series of presentations to senior managers from each department in order to gain support as well as feedback on how to communicate the changes to the wider teams. In addition, an Away Day was arranged with all of the teams involved where the suggested changes were communicated and feedback gathered for future improvement.

In terms of adapting to HBOS's corporate vocabulary, a good example is provided in the term "single version of the truth" or "SVOT" as discussed in section 8.5.2. This term was not suggested by the author but rather was used on a regular basis by senior managers in meetings. Therefore, the term was "borrowed" in order to promote faster acceptance of the new "shared IT

portfolio between Group IT and business divisions".

The key success criteria that were agreed with senior management in Group IT, Group HR and Business Services were as follows:

- Fully implemented central point of contact for managing project initiation requests
- Fully implemented method for identifying and involving key knowledge holders at project initiation
- Fully integrated process for capturing key business requirements and reviewing wider impact
- Reduced average time (from eight weeks to approx. four weeks) needed for producing an IT estimate of project costs and timescales
- Clearly defined project initiation process with clear accountabilities for all parties involved
- Fully integrated mechanism for shared portfolio management and business/IT strategy

## 8.7 Implementation of new engagement and portfolio management processes

This section describes the application of GOKM step 8 (*identify the predominant organisational culture and KM maturity and how these will impact on the approach*), GOKM step 9 (*gain workforce buy-in, based on the organisational culture and KM maturity identified from step 8*), GOKM step 10 (*identify suitable reward and/or recognition systems to encourage participation in the KM initiative*) and GOKM step 11 (*implement the KM initiative in a pilot scope*).

### 8.7.1 The HBOS organisational culture / KM maturity

In order to identify the predominant features of the HBOS organisational culture, a similar approach to that presented in Chapter 6 and Chapter 7 was followed. Based on this and due to similar time constraints, the author provided an individual assessment based on participant observation of the HBOS

environment. This led to the high-level conclusion that HBOS predominantly demonstrated the Task Culture in Handy's (1985) typology (presented in Chapter 5), which is characterised by project or matrix organisations that bring together the appropriate resources and competence required for effective team functioning. As per the GOKM methodology, the predominant organisational culture has to be taken into consideration and the KM initiative should be adapted accordingly.

Organisational KM maturity assessment is considered beyond the scope of this research, as previously mentioned in Chapter 7. Nevertheless, the importance of KM maturity in terms of how a KM initiative is to be implemented has to be recognised.

Based on the general formula presented in Chapter 7 (*KM Maturity = existing KM activities + organisational culture*), the existing KM activities at HBOS (e.g. capturing knowledge from external consultants to be passed on to other employees), as well as its Task Culture, indicated a KM Maturity level that was higher than that initially found at Danwood but perhaps lower than that found at HSBC. This meant that the organisation would not have to be "introduced" to the concepts of KM and, furthermore, it would be possible to apply KM methods that gradually increased in complexity and sophistication. It is important to reiterate, however, that the above method of assessing KM maturity is dependent on subjective judgement and is mainly there as a guideline rather than a firm rule.

### 8.7.2 Securing workforce commitment

Securing workforce commitment was vital to the success of the new knowledge-driven engagement and portfolio management processes. However, this was quite a challenging task. The main reason seems to be that due to the matrix structure of the organisation, many of the parties involved were used to working autonomously and initially demonstrated a lot of resistance to change. It was difficult to see or relate to "the big picture", i.e. that "we all work for the same organisation". This is a common problem for organisations of the size of

HBOS. Therefore, a series of meetings, presentations, Q&A sessions, workshops, etc. were necessary in order to persuade the workforce that this was an exercise where everyone would benefit. In addition, one of the most effective ways to gain commitment from the workforce was via coaching the management team, as discussed in the following section.

### 8.7.3 Coaching the Virtual Leadership Team (VLT) as KM facilitators

The Virtual Leadership Team (VLT) consisted of managers and team leaders from various parts of Group IT. The reason that this VLT had to be formed was that the matrix organisation of HBOS was also evident within departments. For example, Group IT consisted of five key task-driven subdivisions:

- *Customer Team*: team of account managers that are responsible for managing the IT relationship with one or more business divisions
- *ADAM*: responsible for Application Delivery and Application Management
- *Service*: responsible for maintaining the bank's vital systems operating 24/7
- *IT Programmes*: provide project management expertise
- *IT Direction*: responsible for IT Architecture and IT Portfolio Management

The purpose of the VLT was to bring together these teams via their managers for the completion of one or more specific tasks. The terms of reference for the VLT are available in Appendix E. The VLT gave an excellent opportunity to provide some coaching on how to encourage more knowledge exchange between divisions and secure commitment from the workforce to support the recommended changes in engagement, pipeline, requirements gathering and portfolio management.

### 8.7.4 Recognition for knowledge sharing

As previously discussed in Chapter 7, the circumstances under which knowledge sharing is encouraged, as well as the relevant organisational policy will have an impact on the methods used to reward knowledge sharing. The method encouraged by HBOS's management team was similar to that of Danwood, i.e. focused on recognition. Despite being a bank, where perhaps the expectation would be that monetary reward would take priority, HBOS did

have a culture that encouraged such recognition. An additional factor of equal, if not greater, importance was the fact that HBOS had been severely impacted by the "credit crunch" that swept the financial markets at the end of 2007 and continued in 2008 and beyond. This had a knock-on effect on policy in terms of cost cutting and employee reward was no exception. Nevertheless, recognition as a mechanism for rewarding knowledge sharing at HBOS did yield results because most employees saw the value of maintaining a "knowledge sharer" profile, especially during a period of time where everyone's long-term employment was at risk. This observation provided an additional factor to be considered as part of GOKM: the external market conditions.

### 8.7.5 Implementation of new knowledge-driven processes

The new knowledge-driven processes for business engagement, project pipeline management, requirements definition and portfolio management were implemented at HBOS in five main phases. The purpose of taking this phased approach was to provide ongoing support to colleagues and manage the transition into the new working methods. It is worth noting that the new processes were not implemented in the same order as they were designed and presented in section 8.5.2. This was because the enablers for each implementation were available at different times due to constraints in resource and technology. The five phases were implemented as follows:

**Phase 1**: The new Business Engagement model, as presented previously in Figure 8.1, was the first new process to be implemented. This required some changes in departmental structure but not to a significant degree. Some technology enablers were also required in order to make the process work, such as a new e-mail system that forwarded all requests for new IT work to a single central location.

**Phase 2**: The next phase of the implementation was focused on the new Project Pipeline model, as presented previously in Figure 8.3. This process was more difficult to implement because it required a coordinated change in behaviours of all the parties involved. Several iterations were required when

this was applied in practice in order for the process to be fully embedded. The main technology enabler required was a workflow system that was built in SAP (one of the company's main Enterprise Resource Planning systems) in order to support the process.

**Phase 3**: The Hourglass Workshop Model, as presented previously in Figure 8.5, was the third process to be implemented. The Hourglass model originated from another part of HBOS (Retail IT). This was a classic case of leveraging knowledge and best practice from other parts of an organisation. Representatives from each team attended a training course in order to learn how to apply the Hourglass technique and then pass it on to their respective teams.

**Phase 4**: The fourth phase of the implementation was focused on the new Requirements Definition process, as presented previously in Figure 8.4. This was the most complex and one of the most challenging processes to implement. There were a series of workshops required in order to fully explain the process and answer questions from all participating colleagues. In addition, another workflow system had to be built and integrated with the main SAP system in order to enable the process.

**Phase 5**: The final phase of the implementation focused on the shared management of the IT portfolio between Group IT and business divisions, such as Business Services, as presented previously in Figure 8.2. This was the least complex and yet most challenging process to implement due to resistance met by managers in business divisions, who were used to "managing their own portfolio". This required a significant level of diplomacy and debate in order to persuade all managers to adopt this approach, not only in theory but also in practice.

## 8.8 Evaluation of the success of GOKM and future direction at HBOS

This section describes the application of GOKM step 12 (*evaluate the success of the pilot against the defined criteria from step 7 and highlight additional benefits*) and GOKM step 13 (*use the proven success to facilitate a wider roll out of the solution with a gradual expansion of scope and to promote new proposals to solve further problems*).

Due to constraints of not being able to disclose HBOS financial and other quantitative data in this thesis, the evaluation against the success criteria has primarily relied on qualitative data and more specifically, as with HSBC, on feedback from key stakeholders.

- *Fully implemented central point of contact for managing project initiation requests*

The following collection of quotations indicate the success of implementing a central point of contact for managing project initiation requests:

*"Having knowledge of all work requests in one place allows for much better strategic planning"*
– Amanda, *Operations Manager (HR)*

*"The various channels through which we received project initiation requests made portfolio planning, prioritisation and funding a challenging task. The new approach has significantly reduced these problems"*
– Nicola, *Portfolio Planning Manager (IT)*

*"Having a single owner of the project pipeline has made planning and prioritisation much more effective"*
– Nikki, *Systems Manager (HR)*

• *Fully implemented method for identifying and involving key knowledge holders at project initiation*

Identifying key knowledge holders at project initiation appears to have made a real difference in the speed and quality of capturing business requirements. This is indicated by the following quotations:

*"This new approach helps to identify and involve the right people with the right knowledge and empowerment to make decisions about project direction"*
– Sheila, *Business Systems Leader (Business Services)*

*"Attendance of the right people at the initiation workshops is key. It allows us to extract knowledge about business requirements in a way that simply can't be done by filling out forms"*
– Gemma, *Business Analyst (HR)*

*"Spending more time upfront on identifying the right contacts is saving overall project time and effort"*
– Rebecca, *Business Analyst (HR)*

• *Fully integrated process for capturing key business requirements and reviewing wider impact*

Although the new requirements definition process was challenging to implement, it seems to have yielded significant results in the quality of project delivery, as could be concluded from the following quotations:

*"The quality of project delivery has gone up because the quality of requirements has also gone up, by implementing the new process"*
– Chris, *Project Manager (IT)*

*"Although initially challenging to integrate, the new requirements process and especially the initiation workshops have had a significant impact"*
– Steve, *Project Manager (HR)*

*"This new process has brought significant improvements that I'd like to see replicated in other parts of HBOS"*
– Nigel, *Programme Manager (IT)*

- *Reduced average time (from eight weeks to approx. four weeks) needed for producing an IT estimate of project costs and timescales*

Following the implementation of the new requirements process, there was an estimated period of 6-8 months needed to be able to gather enough evidence to demonstrate an overall reduction in the average time needed to produce estimated IT costs and timescales. However, the author's involvement with HBOS came to a natural end only three months after the implementation. Therefore, not enough time had passed to be able to gather enough data for this measurement. Nevertheless, the first few projects where the new requirements process had been applied demonstrated an average time of 5-6 weeks. Although this was a significant reduction, the target of 4 weeks average time had not been achieved yet. However, the forecast provided by participating business analysts was that there would be further reductions in time, once the process was fully embedded into the HBOS process structure. Feedback from senior managers suggested that they were pleased with this reported progress.

- *Clearly defined project initiation process with clear accountabilities for all parties involved*

All parties involved seem to have found the project initiation process map useful, in varying degrees, as suggested by the following quotations:

*"The new project initiation process in Group IT provided a model on which to base a new set of standard processes across HBOS"*
– Fraser, *Senior Manager, Portfolio Planning and Management (IT)*

*"This gives me a better understanding of my own accountabilities in the project cycle as well as what to expect from my colleagues and by when"*
– Fiona, *Project Manager (Business Services)*

*"The new project initiation process fits well with our plans to map out the future direction of Group IT architecture"*
– Scott, *Senior Enterprise Architect (IT)*

- *Fully integrated mechanism for shared portfolio management and business/IT strategy*

The shared portfolio management process was the most challenging to implement due to having to deal with organisational politics and "exchange of power" between departments. Despite these difficulties, senior managers agreed that the new approach was the best way forward for the organisation as a whole. A few examples of quotations that demonstrate this thinking include:

*"This is challenging to implement but it is the best way forward for HBOS"*
– Hazel, *Senior Business Change Manager (Business Services)*

*"The new processes are really making a difference to efficiency, despite some initial resistance to adopt them"*
– Cleve, *Senior Service Manager (HR)*

*"Exceeds expectations, despite challenges"*
– Rick, *Senior Business Systems Manager (IT)*

It is worth noting that there was no significant negative feedback received with regards to the impact of GOKM at HBOS.

### 8.8.1 The next stage of application of GOKM at HBOS

GOKM was first applied at HBOS in order to address some significant issues with business engagement and portfolio management. The success of the initiative created more opportunities for GOKM to be applied in other contexts and in order to address more business problems at HBOS. Three cases were identified by senior management as critical to be addressed with support from GOKM. In all of these cases, the author's role was to act as a consultant and to train the corresponding project leader in the GOKM approach before leaving

HBOS to complete the write-up of this thesis. The three cases were as follows:

1. All senior managers in business divisions unanimously agreed that they would like to see their Group IT colleagues demonstrate a better understanding of business / commercial issues, rather than just provide technical knowledge. The suggested solution was to create a new business-focused colleague education programme.
2. There was a significant interest expressed by senior managers to see more opportunities for synergies and cross over of work between departments, i.e. avoid "re-inventing the wheel". A proposal was pulled together for Shared Services in HBOS.
3. Problems with continuity, handover and knowledge transfer when employees moved positions, similar to those addressed at HSBC (Chapter 7), were also commonplace at HBOS. The "spin off" knowledge transfer methodology that was presented in Chapter 7 was communicated to the corresponding project leader, in order to be applied at HBOS.

The implementation of the proposals above took place after the author had left HBOS and therefore are considered out of scope for this thesis. However, these are mentioned in order to demonstrate that, as in previous case studies, there was a follow-up application of GOKM at HBOS.

## 8.9 GOKM methodology review after implementation at HBOS

The purpose of this section is to revisit the GOKM methodology and explain how the implementation at HBOS has helped to further refine the methodology. As previously mentioned in Chapter 6 and Chapter 7, this is in line with the grounded theory approach that emphasises the need for theories to be grounded in empirical reality, by providing an iterative loop for theory, checking and refinement.

### 8.9.1 The refinement of the GOKM methodology

Following the implementation at HBOS and taking into account the key research findings, the GOKM methodology has been revised as follows

**(amendments appear in bold font):**

1. Identify one or more strategic goals or operational problems that are of significant priority to the organisation and can be supported by a KM initiative

   1.1 The scope/size of the problem can have an impact on short vs. long term KM strategy, so application of GOKM has to be adapted, i.e. which steps and to what extent to be applied.

2. If required, assess the impact of the goals or problems, including an estimate of the associated costs and benefits. If estimate of costs is impractical or less relevant, use other metrics, depending on the KM maturity of the organisation and the expectations of senior stakeholders.

3. Carry out a scoped knowledge audit to identify the knowledge gaps that are contributing to the problem or will help to deliver the goal if closed or to identify knowledge that is at risk

   3.1 Consider the technology enablers that will need to be put in place in order to carry out the scoped knowledge audit

4. Design a KM initiative that focuses on addressing the specific goals or problems

   4.1 Consider technology enablers that will need to be put in place in order to implement the initiative

   4.2 If applicable, consider the necessary adjustments to organisational structure and processes

   4.3 If applicable, consider any implications on human resource management and development

   **4.4 Consider the impact of external/market conditions on the KM approach**

5. If required, prepare a business case that justifies the cost of implementing the solution by comparing it with the costs and benefits, derived in step 2, or by other metrics if costs are not being used

6. Secure senior support and sponsorship based on the business case from step 5

6.1 Adapt to corporate language when engaging with senior management

7. Define measurable success criteria (e.g. cost, time, HR performance metrics etc.) based on the goals or problems to be addressed

8. Identify the predominant organisational culture and KM maturity and how these will impact on the approach

9. Gain workforce buy-in, based on the organisational culture and KM maturity identified from step 8

9.1 Adapt to corporate language when engaging with the workforce

9.2 Identify potential knowledge champions

9.3 Develop managers as KM facilitators

10. Identify suitable reward and/or recognition systems to encourage participation in the KM initiative

11. Implement the KM initiative in a pilot scope

**11.1 Plan and implement a change management strategy (for significant changes that have been introduced by the KM initiative)**

12. Evaluate the success of the pilot against the defined criteria from step 7 and highlight additional benefits

13. Use the proven success to facilitate a wider roll out of the solution with a gradual expansion of scope and to promote new proposals to solve further problems.

The next chapter presents an overall evaluation of GOKM as well as some further suggestions for improvement, based on hindsight gained from all three of the case studies at Danwood, HSBC and HBOS.

## 8.10 Summary

This chapter has illustrated the application of the GOKM methodology at HBOS Bank. The author was placed in the Group IT department and, following analysis, discovered a significant misalignment between the IT portfolio and the business strategy. The processes for the engagement of Group IT with business divisions and portfolio planning/management were analysed via a scoped knowledge audit, which revealed considerable inefficiencies. This led to the design and implementation of a KM initiative that consisted of three key components: a shared project portfolio between Group IT and other business divisions, a knowledge-driven method for managing work requests and a knowledge-based method for gathering business requirements. Key observations and lessons learnt from the implementation were discussed and the GOKM methodology was reviewed and refined.

This chapter, in addition to the contribution made by Chapter 7, has made a further contribution towards the achievement of Objective 6 (*Implement the refined goal-oriented KM methodology in other industry settings in order to test its applicability and scalability in a wider business context*). Chapter 9 and Chapter 10 focus on the achievement of Objective 7 (*Evaluate the overall effectiveness of the goal-oriented KM methodology and provide recommendations for future research direction*) by reviewing the overall impact of GOKM and making recommendations for further work, based on the insights gained from the case studies at Danwood, HSBC and HBOS.

# Chapter 9: Evaluation of GOKM

*"However beautiful the strategy, you should occasionally look at the results."*

*** Sir Winston Churchill ***

## 9.1 Chapter overview

This chapter presents the overall evaluation of GOKM by using five key criteria, as presented in section 9.2. In addition, the impact of GOKM at Danwood, HSBC and HBOS is contrasted against the specific criteria that were agreed with senior management in each case study. Hindsight gained from the three case studies leads to some suggestions for further refinement of the GOKM methodology.

## 9.2 Method of evaluation

GOKM has been designed, primarily, as a practical and pragmatic methodology that is applicable in industry. Therefore, it was deemed appropriate to design an equally practical and pragmatic evaluation framework to assess the impact of GOKM. During the course of the case studies at Danwood, HSBC and HBOS the various methods that practitioners used to evaluate projects, initiatives, technologies, frameworks and methodologies were observed. These methods were analysed, cross-referenced and distilled down to five key criteria that formed the basis of the evaluation of GOKM: *bottom-line results*, *added value*, *flexibility*, *usability* and *durability*. The selection of these criteria was based on how frequently they were used as well as how important they were perceived to be by practitioners. It must be acknowledged that the design and validity of this evaluation framework is, to some extent, limited by the subjective judgement of the practitioners that contributed to its design. However, this limitation is overridden by the fact that the evaluation framework satisfies the key requirement of being practical and pragmatic and, in addition, it has been validated by the primary "target audience" of GOKM – practitioners in industry.

The following questions are proposed to be answered in order to evaluate the effectiveness of GOKM:

**Bottom-line Results**

- How did GOKM perform against the defined success criteria in each case study?
- To what extent can success in any of the case studies be attributed to GOKM?

**Added Value**

- Does the GOKM approach bring any added value, e.g. extra benefits other than just the defined success criteria of each case study?

**Flexibility**

- How flexible is the GOKM approach?
- Can it be applied in numerous situations and environments and still yield results?

**Usability**

- Did participants in each case study find GOKM easy to understand and apply?
- Did GOKM attract longer-term attention, e.g. after the completion of each case study?

**Durability**

- Is the GOKM approach durable? i.e. is it likely to be a useful tool for the long-term?
- Can the GOKM approach evolve with new circumstances and therefore increase its own endurance?

The above questions provide a driver for the evaluation of GOKM in the following sections, where GOKM is reviewed in each individual case study as

well as on an overall basis.

## 9.3 Evaluation of the impact of GOKM at Danwood

The application of GOKM at Danwood brought significant results, both in terms of satisfying the success criteria as well as delivering additional benefits. As discussed in Chapter 6, Danwood had a significant problem with the end-to-end processing of sales orders. By applying GOKM, a new knowledge-centric approach was designed and implemented for sales order processing. This became known as the Sales Order Support (SOS) project. The specific success criteria that had been agreed with Danwood's senior management were as follows:

- *Reduce average number of days for end-to-end order process from 14 to 7*
  (achieved 8.5 days)

- *Reduce overdue orders from 29% to 10%*
  (achieved 16%)

- *Reduce stock on hold for overdue orders from 83% to 33%*
  (achieved 48%)

In business terms, the above results are a significant success, especially when taking into consideration the time and resource constraints that had been imposed on the implementation. Although the target values for the success criteria had not been fully achieved, Danwood's senior management, with the expectation that the ambitious target values would be achieved in the near future, endorsed the above results.

It could perhaps be argued that a significant proportion of these results could be attributed to the application of GOKM, because the efficiencies that brought these results were mainly achieved at the operational level, where the improved use and management of knowledge has enhanced the overall

performance of sales order business processes. However, as previously mentioned in Chapter 6, it is quite challenging to clearly demonstrate the exact amount of contribution made by GOKM and the SOS project towards the achievement of the success criteria, due to the influence of other factors that were outside of the control of the project. However, Danwood's senior management agreed that GOKM and the SOS project had made one of the most significant contributions towards success.

In addition to the key success criteria, the application of GOKM also brought some added value benefits, e.g. improved communication between departments, common visibility of order progress across all departments, reduction of process complexity and therefore expected reduction in errors and repetition, improvement in efficiency of document flow, etc.

An additional indication of the overall success of GOKM at Danwood was provided when the Director of Information Systems contacted the author, six months after the completion of the case study, in order to reiterate the positive impact of GOKM and the SOS project at Danwood.

In the Danwood case study, GOKM demonstrated flexibility to the particular circumstances and durability since it was picked up and applied by others after the author's departure. One of the key factors that enable GOKM to be durable is evolution based on experience of application. The first application of GOKM at Danwood resulted in additional factors being added to the methodology: technology enablers for the knowledge audit, corporate vocabulary, knowledge champions, managers as KM facilitators and recognition for knowledge sharing.

The success of GOKM at Danwood resulted in more initiatives and longer-term application of the methodology. The next KM initiative to be launched at Danwood aimed at building a knowledge base of all Danwood processes in order to evaluate and bring similar improvements to those achieved by the SOS project as well as support training and auditing needs. The GOKM approach was handed over, as a guide for the implementation, to Danwood's Process

Quality Manager, whom explained that he found the GOKM principles easy to understand and apply.

The durability of GOKM is demonstrated in the fact that, two years after the first application of GOKM at Danwood, the SOS project had evolved into a new initiative that had an even wider scope and became known as project SOPHIE (Sales Order Processing that is Highly Effective), as reported in Danwood's Annual Report for 2007 (Dover, 2008):
*"Minimising the amount of time spent in administration can be done in many different ways. Improving accuracy has the dual benefit of reducing administration time and improving customer satisfaction. Project S.O.P.H.I.E. or Sales Order Processing that is Highly Effective, does just that. The project delivers an automated sales order processing system that links to other relevant internal systems. With all pricing, lease contracts, sales orders and service contracts completed automatically, with links into back office systems and all relevant internal departments, the flow of paperwork is significantly improved. During 2008 the Group will benefit from the efficiency gains derived from the deployment of SOPHIE across all sites".*

## 9.4 Evaluation of the impact of GOKM at HSBC

The application of GOKM at HSBC delivered positive results against the defined criteria as well as added value benefits. As discussed in Chapter 7, HSBC was facing significant knowledge loss when employees were leaving key positions. By applying GOKM, a new approach was designed and implemented for the efficient transfer of knowledge between leavers and their successors.

The success criteria required by HSBC on this occasion were focused on qualitative data and more specifically, feedback from study participants about the value added by the knowledge transfer initiative. Overall feedback from participants was very positive and indicated that successors were truly helped in taking on their new role with the support of the knowledge transfer initiative. Further indication of success was provided by Steve's feedback – the key

stakeholder in the application of GOKM at HSBC. Steve had previously attempted to address the issue of knowledge loss by inviting a series of KM consultants and practitioners to provide a solution. Steve was very clear in that he believed that GOKM had yielded the most significant and pragmatic results and at the same time had also received the most positive feedback from case study participants.

The success of these results can, to a fair extent, be attributed to the application of GOKM because the transfer of critical knowledge from leavers to successors means that the successors need to spend less time on "learning by experience". In other words, successors can rapidly apply lessons learnt from their corresponding predecessor's experience and therefore reduce their time-to-competency, while also needing less support from external consultants and contractors.

In addition to the above, the application of GOKM also brought some added value benefits, e.g. knowledge harvest reports that were more content-rich than those produced in previous exercises; knowledge-driven improvements to business operations; and expansion of knowledge transfer to a wider audience. As previously discussed in Chapter 7, the success of GOKM at HSBC resulted in a gradual expansion of scope and application. A special focus in this expansion of scope was set on migrating complex business processes to India and Brazil. The migration project leader was trained on how to apply the GOKM methodology. The project leader was then responsible for passing on the method to her team for wider distribution and application. In a similar way to the Process Quality Manager in the Danwood case study, the migration project leader explained that she found the concepts of GOKM straightforward to understand and apply.

As with the case study at Danwood, GOKM demonstrated flexibility in terms of the specific KM requirements at HSBC and durability in terms of being further applied as part of other initiatives. Following the implementation at HSBC, GOKM demonstrated further evolution with the inclusion of additional factors in

the methodology: scope/size of the problem, KM maturity, alternative metrics where costs are impractical and identifying knowledge that is at risk.

## 9.5 Evaluation of the impact of GOKM at HBOS

The application of GOKM at HBOS provided an opportunity for a third case study while delivering a strong performance against the success criteria that had been set by senior IT management. As discussed in Chapter 8, HBOS was dealing with a significant misalignment between the business strategy and the IT project portfolio. By applying GOKM, a new set of knowledge-driven processes for business engagement and portfolio management were designed and implemented. The success criteria that had been defined by senior IT management were as follows:

1. Fully implemented central point of contact for managing project initiation requests
2. Fully implemented method for identifying and involving key knowledge holders at project initiation
3. Fully integrated process for capturing key business requirements and reviewing wider impact
4. Clearly defined project initiation process with clear accountabilities for all parties involved
5. Fully integrated mechanism for shared portfolio management and business/IT strategy
6. Reduced average time (from eight weeks to approx. four weeks) needed for producing an IT estimate of project costs and timescales

Due to constraints of not being able to disclose HBOS financial and other quantitative data in this thesis, the evaluation against the success criteria has primarily relied on qualitative data and more specifically, as with HSBC, on feedback from key stakeholders. Completion of the first four success criteria was demonstrated in Chapter 8 via the positive feedback received from senior business and IT stakeholders. Completion of the fifth success criterion was also achieved, as indicated by feedback, despite the challenges of organisational

politics and "power exchange" between departments. Feedback from senior managers suggested that it was *"the best way forward for HBOS"*.

Some early data analysis indicated that the final criterion had been partially achieved (5 – 6 weeks of average time needed to produce an IT estimate of costs and timescales with a target of 4 weeks). However, participating business analysts forecasted that the target of 4 weeks would be achieved by allowing more time for the new process to become fully embedded into the HBOS process structure. Feedback from senior managers suggested that they were pleased with this reported progress.

Due to the qualitative nature of the available data, it is difficult to demonstrate the proportion of the success that can be attributed to GOKM. However, it is worth noting that all stakeholders agreed that the application of GOKM has had a significant impact on business engagement and the alignment of the Group IT project portfolio to the business strategy at HBOS.

As with the previous case studies at Danwood and HSBC, GOKM demonstrated flexibility in terms of the specific KM requirements at HBOS and durability in terms of being further applied as part of other initiatives. Following the implementation at HBOS, GOKM demonstrated further evolution with the inclusion of additional factors in the methodology: external/market conditions and change management strategy. It is worth noting that external conditions had been recognised as one of the eleven KM factors during the analysis that was performed in Chapter 5. However, at that point in time, external conditions were simply considered to be something to be generally aware of when implementing KM, rather than to be explicitly included in the GOKM methodology. This perception was changed following the experience of applying GOKM at HBOS during a period of volatile market conditions (known as the "credit crunch"). It was realised that it is important to take external conditions into consideration as early as possible, i.e. at the design phase of a KM initiative, because they have an impact on the "organisational climate". This is discussed further in the following section (9.6).

The success of GOKM at HBOS attracted further attention from senior IT managers and resulted in three proposals for further application of the methodology, as previously discussed in Chapter 8. These proposals were focused on improving the business knowledge of IT colleagues, nurturing synergies and knowledge sharing between the many departments in HBOS and managing efficient knowledge transfer for colleagues that were leaving key positions (by applying the KTW approach that was presented in Chapter 7). In all of these new proposals, the author's role was to act as a consultant and train the corresponding project leader in the GOKM methodology before the author left HBOS to write up this thesis. It is worth highlighting that all project leaders expressed that they found the GOKM methodology to be pragmatic and therefore suitable and applicable in the HBOS business environment.

## 9.6 Further refinement of the GOKM methodology

Following the implementation of GOKM in three case studies and taking into account the key research findings as well as hindsight that is discussed below in this section, some further refinements to the methodology are proposed as follows (**amendments appear in bold font**):

1. Identify one or more strategic goals or operational problems that are of significant priority to the organisation and can be supported by a KM initiative

   1.1 The scope/size of the problem can have an impact on short vs. long term KM strategy, so application of GOKM has to be adapted, i.e. which steps and to what extent to be applied.

2. If required, assess the impact of the goals or problems, including an estimate of the associated costs and benefits. If estimate of costs is impractical or less relevant, use other metrics, depending on the KM maturity of the organisation and the expectations of senior stakeholders.

3. Carry out a scoped knowledge audit to identify the knowledge gaps that are contributing to the problem or will help to deliver the goal if closed or to identify knowledge that is at risk

3.1 Consider the technology enablers that will need to be put in place in order to carry out the scoped knowledge audit

4. Design a KM initiative that focuses on addressing the specific goals or problems

4.1 Consider technology enablers that will need to be put in place in order to implement the initiative

4.2 If applicable, consider the necessary adjustments to organisational structure and processes

4.3 If applicable, consider any implications on human resource management and development

4.4 Consider the impact of external/market conditions on the KM approach

5. If required, prepare a business case that justifies the cost of implementing the solution by comparing it with the costs and benefits, derived in step 2, or by other metrics if costs are not being used

6. Secure senior support and sponsorship based on the business case from step 5

6.1 Adapt to corporate language when engaging with senior management

7. Define measurable success criteria (e.g. cost, time, HR performance metrics etc.) based on the goals or problems to be addressed

8. Identify the predominant organisational culture, **organisational climate** and KM maturity and how these will impact on the approach

9. Gain workforce buy-in, based on the organisational culture, **organisational climate** and KM maturity identified from step 8

9.1 Adapt to corporate language when engaging with the workforce

9.2 Identify potential knowledge champions

9.3 Develop managers as KM facilitators

10. Identify suitable reward and/or recognition systems to encourage

participation in the KM initiative

11. Implement the KM initiative in a pilot scope

11.1 Plan and implement a change management strategy (for significant changes that have been introduced by the KM initiative)

12. Evaluate the success of the pilot against the defined criteria from step 7 and highlight additional benefits

13. Use the proven success to facilitate a wider roll out of the solution with a gradual expansion of scope and to promote new proposals to solve further problems. **Take into consideration whether the business goals have changed and whether the KM maturity has evolved.**

In the HBOS case study, it was noticed that a gradual change in the "organisational climate" occurred during the period of the credit crunch. In general, an organisation's climate is thought to be a direct behavioural manifestation of organisational culture, which is a deeper and less consciously held set of cognitions and affective attachments (Schein, 1985; Mikkelsen and Gronhaug, 1999; Janz and Prasarnphanich, 2003). Culture and climate often measure the same phenomenon – organisation reward systems, organisational support, and the like – but climate is considered the more visible and adaptive of the two (James and Jones, 1979; Janz and Prasarnphanich, 2003). According to Janz and Prasarnphanich (2003) the most significant and commonly studied dimensions of organisational climate are *risk*, *reward*, *warmth* and *support*. Risk measures the orientation of the organisation toward undertaking potentially innovative initiatives with uncertain outcomes. Reward is a measure of how well the organisation recognizes employee performance with rewards. Warmth is a measure of the friendliness of the atmosphere in the organisation. Support is a measure of the organisation's interest in the welfare of the employee.

The external conditions, i.e. the credit crunch, seemed to have a significant impact on HBOS's organisational climate – especially on the aspects of *risk* and *warmth* – during the case study. It is suspected that the change in organisational climate had some impact on the application of GOKM at HBOS, although it is not clear to what extent. Perhaps if the organisational climate had been somehow measured at the beginning of the case study, the GOKM approach could have been adapted in order to produce optimum results. Although organisational climate measurement is considered outside the scope of this thesis, it is worth mentioning that Janz and Prasarnphanich's (2003) do present an organisational climate measurement scale that could be adapted to inform the GOKM approach. Therefore, it has been recommended that an amendment should be made to the GOKM methodology to include organisational climate as a factor, as demonstrated above in GOKM steps 8 and 9.

Following the experience of applying GOKM in three organisations, the author has a better appreciation of how, frequently and dynamically, goals and priorities can change in a competitive industry environment. In addition, it has been noticed that the KM maturity of each organisation seemed to evolve with each application of GOKM. Therefore, it would make sense to take this into consideration when preparing new KM proposals. For these reasons, a further amendment to the GOKM methodology has been suggested, as demonstrated above in GOKM step 13. However, it is worth noting that further research is required on how to more accurately identify and measure organisational KM maturity. This forms part of the recommendations for further work in section 10.3.3.

## 9.7 Conclusion

The evaluation of GOKM in three organisations indicates a good overall performance against the evaluation criteria that were presented in section 9.2, i.e. *bottom-line results*, *added value*, *flexibility*, *usability* and *durability*. In addition, the impact of GOKM in each organisation was measured against the

specific criteria that were agreed with senior management in each case. In the Danwood case study, performance against success criteria was measured mainly with quantitative data, whereas in the HSBC and HBOS case studies it was measured mainly with qualitative data. This perhaps provides some evidence to support the use of a pragmatic mix of approaches for measuring KM performance, according to the particular context and goals of each organisation, as previously advocated in Chapter 2. A summary of the evaluation of GOKM performance in the three case studies is presented in Table 9.1.

| Evaluation criteria / Case study | Bottom-line Results | Added Value | Flexibility | Usability | Durability | Supporting Data |
|---|---|---|---|---|---|---|
| Danwood case study | ✓ | ✓ | ✓ | ✓ | ✓ | Quantitative (primarily) and Qualitative |
| HSBC case study | ✓ | ✓ | ✓ | ✓ | ✓ | Qualitative |
| HBOS case study | ✓ | | ✓ | ✓ | ✓ | Qualitative (primarily) and Quantitative |

Table 9.1: Summary of the evaluation of GOKM performance in three case studies

It is worth noting that some of the GOKM steps were relevant and applicable to a greater or lesser extent, depending on the particular context, priorities and time constraints of each case study. In some instances there were GOKM steps that were not required at all. Furthermore, it was observed that, in practice, some of the GOKM steps were applied out of sequence or in parallel. However, this is not considered to be a problem. In fact, this demonstrates further the flexibility of the GOKM approach. In recognition of the flexibility required in practice, the design of GOKM actually demonstrates some elements that are not strictly in sequence. For example, the assessment of organisational KM maturity takes place in GOKM step 8, yet GOKM step 2 may depend on KM maturity assessment when using non-financial metrics. In essence, the only step that the author would insist on being applied in sequence is GOKM step 1, i.e. to start with identifying the particular goal or problem that needs to be addressed.

In the final chapter, the research aim and objectives are revisited and some recommendations for further work are provided, as well as an overall conclusion on the contribution of this thesis.

# Chapter 10: Conclusions and recommendations for further work

*"The outcome of any serious research can only be to make two questions grow where one question grew before."*

*** Thorstein Veblen ***

## 10.1 Chapter overview

In this final chapter, the research aim and objectives are revisited in order to examine whether and how they have been achieved. This is followed by a critical analysis of the limitations and advantages of performing research in industry as well as recommendations for further work. Finally, an overall conclusion on the contribution of this research to the development of goal-oriented KM theory is presented.

## 10.2 Research aim and objectives revisited

The aim of this research, as presented in Chapter 1 and revised in Chapter 2, was to *"design and evaluate a pragmatic methodology that employs the most appropriate KM methods in order to address specific organisational goals or problems."*

Seven key objectives were identified that needed to be met in order to achieve the aim. These are presented and discussed below.

**1. Review and analyse published academic literature and industry-based case studies in order to:**

**1.1 Understand existing KM approaches *(Chapter 2)***

**1.2 Identify key success factors and barriers for effective KM implementations *(Chapter 5)***

**1.3 Choose the most appropriate research methodology that needs to be applied in order to satisfy the research aim *(Chapter 3)***

Objective 1.1 was addressed in Chapter 2, where a comparison of KM strategies and approaches as well as KM frameworks and methodologies was presented, including agreements and disagreements about their elements, structure, terminology and emphasis.

Chapter 2 also laid some of the foundations for the achievement of Objective 1.2, which was fully addressed in Chapter 5 with a comprehensive review of key success factors and barriers for effective KM implementations.

Objective 1.3 was addressed in Chapter 3, where a variety of research approaches were discussed, in order to identify those that were most suitable to employ for this research. The chosen research methods were presented in a mind map and took into consideration the research objectives as well as the particular environment (industry) and circumstances in which the research was to be carried out. In addition, the methods used in previous similar studies also provided guidance for the choices of research methods.

**2. Conduct a pilot study into managing knowledge in industry *(Chapter 4)***

Objective 2 was addressed in Chapter 4 with a pilot study of KM conducted at Danwood. The standard pattern of audit, analysis and system design initially appeared to be successful, but an unwillingness of the company to prioritise the proposed changes eventually led to the failure of the initiative. Reflection on the project outcome led to further research into the reasons for the failure and a re-evaluation of the approach taken. The conclusions reinforced the need for a goal-oriented approach to KM.

**3. Design a goal-oriented KM methodology, based on analysis of KM methods from the literature review as well as lessons learnt from the pilot study *(Chapter 5)***

Some of the groundwork for the achievement of Objective 3 was presented in Chapter 2 and then followed up and fully addressed in Chapter 5, where the first version of the GOKM methodology was presented. The three key influencers that shaped this first version were: the review of existing KM approaches that

demonstrated goal-oriented thinking (Chapter 2), the pilot KM study that was carried out at Danwood (Chapter 4) and the review of factors that influence KM (Chapter 5).

**4. Implement the goal-oriented KM methodology in industry and evaluate its ability to address specific organisational problems with pragmatic metrics *(Chapter 6)***

Objective 4 was addressed in Chapter 6 by presenting the first-time application of the GOKM methodology, which took place at Danwood. As a result, a new proposal to restructure core departments in order to create a knowledge-driven centre of excellence was presented. Following approval by Danwood's board of directors, the implementation of the proposal was carried out and the key observations were discussed.

Chapter 2 also made a contribution towards Objective 4 by presenting the challenge of evaluating KM performance, along with a review of various evaluation perspectives.

**5. Refine the goal-oriented KM methodology, based on lessons learnt from implementing in industry *(Chapter 6)***

Chapter 6 also addressed Objective 5, by revisiting the GOKM methodology after its first-time application at Danwood, in order to demonstrate how the lessons learnt from the case study helped to refine the approach.

**6. Implement the refined goal-oriented KM methodology in other industry settings in order to test its applicability and scalability in a wider business context *(Chapter 7 and Chapter 8)***

Objective 6 was addressed in Chapter 7 as well as Chapter 8 with the implementation of GOKM at HSBC and HBOS respectively. In Chapter 7, the application of GOKM led to the design and implementation of a five-step knowledge transfer initiative to minimise the loss of critical knowledge. In Chapter 8, the application of GOKM led to the design and implementation of a KM initiative that consisted of three key components: a shared project portfolio

between Group IT and other business divisions, a knowledge-driven method for managing work requests and a knowledge-based method for gathering business requirements. In both Chapter 7 and Chapter 8, the key observations and lessons learnt from the implementations were discussed and the GOKM methodology was reviewed and further refined.

**7. Evaluate the overall effectiveness of the goal-oriented KM methodology and provide recommendations for future research direction *(Chapter 9 and Chapter 10)***

Objective 7 was addressed in Chapter 9 and Chapter 10. In Chapter 9, the overall evaluation of GOKM by using five key criteria (*bottom-line results*, *added value*, *flexibility*, *usability* and *durability*) was presented. In addition, the impact of GOKM in each organisation was measured against the specific criteria that were agreed with senior management in each case study. The overall impact of GOKM in the three case study organisations was also discussed. Finally, Chapter 10 presented conclusions and recommendations for future research direction based on both theoretical insights gained from the literature review and practical insights gained from the implementation of GOKM at Danwood, HSBC and HBOS.

## 10.3 Conclusions and further work

This section describes some research limitations as well as reflections on performing research in industry and the methods used to do so. This is followed by recommendations for further work.

### 10.3.1 Research limitations and advantages

The case studies at Danwood, HSBC and HBOS have provided some evidence of the effectiveness of the GOKM methodology, while also contributing to its refinement. Three case studies are not considered as enough to reach "theoretical saturation" (discussed in Chapter 2) for GOKM. In other words, more case studies are likely to lead to further refinement of the methodology. However, the total duration of the three case studies used in this thesis has

already exceeded the timeframe that is normally expected for doctoral research at Loughborough University. Therefore, the suggestion is that the theoretical development of GOKM should continue via further action research case studies. This forms part of the recommendations for future research (in section 10.3.3).

Another limitation of the three case studies in this thesis is perhaps that two out of three (HSBC and HBOS) were in the same business sector – banking. Three case studies in three different business sectors may have offered additional insights about the effectiveness of GOKM and may have also contributed further towards its refinement. Nevertheless, it is worth mentioning that HSBC and HBOS are, after all, unique organisations with their own particular culture, values, strategy and priorities. For example, HSBC was primarily focused on international markets whereas HBOS was primarily focused on the UK market and especially on mortgage lending. These differences between HSBC and HBOS did offer different perspectives on the applicability of GOKM.

It is also worth mentioning that each of the three participating organisations seemed to represent a different category in Handy's (1985) typology (presented in Chapter 5) of organisational cultures. Although this was by chance rather than by design, it perhaps adds some further credibility to the evaluation of GOKM, since it has been tested in three distinctly different organisational cultures.

Finally, the variety of sizes of the participating organisations, i.e. Danwood (small-to-medium enterprise), HBOS (international but primarily UK-focused) and HSBC (multinational) has also offered diverse perspectives on the relevance, impact and refinement of GOKM.

### 10.3.2 Reflections on performing research in industry and methods used

Performing research in industry has, overall, been a positive and productive experience. This thesis has demonstrated that applying a grounded theoretical approach for research in industry can produce significant results. Furthermore,

the placement of the author as an action researcher in each business case has provided a very useful "insider's view". The insights produced from this approach would be hard, if not impossible, to replicate in a purely theoretical study. However, it is also important to mention that performing research in industry requires the researcher to perform a difficult "balancing act" – to gather evidence that supports academic research while also producing bottom-line results for the participating organisations. Time pressure is a constant in competitive business environments and this can have an impact on how research methods are applied. Essentially, this can lead to a simplification of the methods used, based on the premise that it is better to use a simplified method in the available time rather than no method at all. In fact, it was noticed that the principle of simplification was an evident reality and produced bottom-line results in all of the three case study organisations.

### 10.3.3 Recommendations for further work

In line with the opening quotation of this chapter, the author would like to make some suggestions for future research, based on the experience and knowledge gained from performing the research for this thesis.

The first suggestion, as previously mentioned in section 9.7.1, is to carry out further case studies of the application of GOKM in other industry settings, in order to continue to refine GOKM and increase its scalability in a wider business context. If possible, the case studies could be performed in different industry sectors to those presented in this thesis and perhaps even in other countries so as to study the potential impact of local culture on GOKM. Performing additional case studies would also offer the opportunity to expand the list of KM factors that were presented in Chapter 5. The three case studies presented in this thesis have already added to the KM factors list, e.g. organisational climate and KM maturity.

The second suggestion would be to perform research on how to more accurately identify the predominant organisational culture, organisational climate and KM maturity of the organisation where GOKM is being applied.

Ashkanasy et al. (2000) and Jashapara (2004) offer some interesting suggestions on how to assess organisational culture, while Janz and Prasarnphanich's (2003) present their own framework for assessing organisational climate. A starting point for research into KM maturity has been offered, by proposing the basic formula: "KM Maturity = existing KM activities + organisational culture".

Fundamentally, the GOKM approach encourages KM practitioners to start by asking: "**What** problem are we trying to solve?". The experience gained from the three case studies has led to the conclusion that it could be just as relevant and important to ask: "**Whose** problem are we trying to solve?". This could perhaps be pursued as a significant contribution to the evolution of GOKM.

In addition to expanding the boundaries of the GOKM methodology, there are some further opportunities for future research that are worth highlighting. For example, the importance of being able to "decodify" explicit knowledge, i.e. to understand the related terminology, ontology and taxonomy, was recognised in Chapter 7. Hall (2006) offers a theoretical basis as a starting point to pursue this further. Another opportunity for future research relates to the subject of rewards for knowledge sharing. It is worth noting that the job leavers in the HSBC case study were either moving to another position internally in the company or retiring or going on maternity leave. None were leaving the company to work elsewhere. This raises the question of whether the recognition-based incentives used in the case study would still be effective in the scenario where the job leaver is actually leaving the company. Whatever the destination of a job leaver, it is likely to be beneficial to keep in touch with the job leaver for future knowledge exchange. This raises a further question of what kind of incentives would be suitable for encouraging job leavers to stay in contact and make further knowledge contributions after leaving.

## 10.4 Overall conclusion

This thesis has fulfilled the aim and objectives that were stated in Chapter 1, updated in Chapter 2 and revisited in this chapter. The pursuit of a KM methodology that would focus on addressing specific organisational goals or problems led to the development of GOKM. The GOKM methodology was then successfully implemented, evaluated and refined via three case studies in industry, while also producing significant benefits for the participating organisations.

This thesis has made a contribution to knowledge by presenting a novel goal-oriented KM methodology that addresses all of the key KM enablers and barriers. No other goal-oriented KM methodology has been found in the literature that explicitly addresses all of these factors. An additional contribution to knowledge has been made by presenting an original evaluation framework that was developed and applied to assess the impact of GOKM in industry.

The ideas involved in the core design of GOKM are not specific to any particular domain. Therefore, there is great potential for GOKM to be applicable in a much wider context and this provides many noteworthy opportunities for future research.

# Bibliography

Adams, G.L. and Lamont, B.T. (2003), "Knowledge management systems and developing sustainable competitive advantage", *Journal of Knowledge Management*, Vol 7, No 2, pp. 142-154. Available: http://www.ingenta.com

Agar, M.H. (1986), *Independents declared*, Smithsonian Institution Press, Washington DC.

Ahmed, P., Lim, K. and Loh, A. (2002), *Learning Through Knowledge Management*, Butterworth-Heinemann, Oxford, pp. 289-313.

Ahmed, P.K., Lim, K.K. and Zairi, M. (1999), "Measurement practice for knowledge management", *Journal of Workplace Learning*, Vol 11, No 8, pp. 304-311. Available: http://www.emerald-library.com

Ahn, J-H. and Chang S-G. (2003), "Assessing the contribution of knowledge to business performance: the KP3 methodology", *Decision Support Systems*, No 1059, pp. 1-14. Available: http://www.elsevier.com/locate/dsw

Aidemark, J. (2008), "Knowledge Management Paradoxes", in Harorimana, D. and Watkins, D. (eds.), *9th European Conference on Knowledge Management*, Academic Publishing Limited, Reading, UK, pp. 1-10. ISBN: 978-1-906638-11-5 CD. Available: http://academic-conferences.org/2-proceedings.htm

Alavi, M. (1994),"Computer-Mediated Collaborative Learning: An Empirical Evaluation", *MIS Quarterly*, Vol 18, pp. 159-174.

Alavi, M. and Leidner, D.E. (2001), "Review: Knowledge management and knowledge management systems: Conceptual foundations and research issues", *MIS Quarterly*, Vol 25, No 1, pp. 107–136.

Aler, R., Borrajo, D. and Camacho, D. (2002), "A knowledge-based approach for business process reengineering, SHAMASH", *Knowledge-Based Systems*, Vol 15, No 8, pp. 473-474. Available: http://www.elsevier.com/gej-ng/10/30/56/64/57/show/toc.htt

Alvesson, M and Wilmott, H. (1992), "On the Idea of Emancipation in Management and Organization Studies", *Academy of Management Review*, Vol 17, No 3, pp. 35-40.

Anklam, P. (2002), "The language of Knowledge Management", *Knowledge Management Magazine*, Vol 5, No 10. Available: http://www.kmmagazine.com

APQC (1998), "Expanding Knowledge Management Externally", *APQC International Benchmarking Online*. Available: http://old.apqc.org/pubs/summaries/CMEXPAND.pdf

APQC (1999), *Knowledge Management: Executive Summary*, Consortium Benchmarking Study / Best Practice Report, American Productivity Quality Center. Available: http://www.apqc.org [accessed 22 October 2005]

April, K.A. (2002), "Guidelines for developing a k-strategy", *Journal of Knowledge Management*, Vol 6, No 5, pp. 445-456. Available: http://www.emeraldinsight.com/1367-3270.htm

Archibald, D. (2004), *Knowledge Retention Methodology: Ensuring knowledge continuity - a methodology to retain valuable knowledge*. Available: http://www.ki-network.org [accessed 5th February 2006]

Argyris, C. and Schon, D.A. (1996), *Organisational Learning II: Theory, Method, and Practice*, Addison-Wesley, Wokingham.

Aristotle (1998), *The Metaphysics*, translated by Lawson-Tancred, H., Penguin Classics, Penguin Books, London.

Armistead, C. (1999), "Knowledge management and process performance", *International Journal of Knowledge Management*, Vol 3, No 2, pp. 143-57. Available: http://www.emeraldinsight.com

Armistead, C. and Meakins, M. (2002), "A Framework for Practising Knowledge Management", *Long Range Planning*, Vol 35, pp. 49-71. Available: http://www.lrpjournal.com

Ashkanasy, N.M., Broadfoot, L.E. and Falkus, S. (2000), "Questionnaire Measures of Organisational Culture", in Ashkanasy, N.M., Wilderom, C.P.M. and Peterson, M.F. (eds.), *Handbook of Organisational Culture and Climate*, Sage Publications, Thousand Oaks, CA.

Balafas, P. and Jackson, T.W. (2003), "Revitalising your Systems through Cross-System Analysis", in Ross and Staples (eds.), *Proceedings of Software Quality Management 2003: Process Improvement and Project Management Issues*, Springer, pp. 115-126. ISBN:1902505530

Balafas, P., Jackson, T.W. and Dawson, R.J. (2004a), "Introduction of Goal-Oriented Knowledge Management (GOKM)", in Khosrow-Pour, M. (ed.), *Innovations Through Information Technology*, Idea Group Publishing, IRMA Conference, New Orleans, USA, May, pp. 362-365. ISBN: 1-59140-261-1.

Balafas, P., Jackson, T.W. and Dawson, R.J. (2004b), "Deploying Knowledge Management and Securing Future Sponsorship within a Highly Hierarchical 'Role-Based' Organisational Culture", *International Journal of Knowledge, Culture and Change Management*, Vol 4, Common Ground Publishing, ISSN (Print): 1447-9524, ISSN (Online): 1447-9575. Available: http://www.Management-Journal.com

Balafas, P.J., Jackson, T.W., Dawson, R. and Wilson, D. (2003), "Accelerated Knowledge Management: Developing Rapid KM Methodology for an Adaptive Service-Orientated Business Model ", in Abbot, J., Martin, L., Palmer, R., Stone, M. and Wright, L.T. (eds.), *Business Innovation in the Knowledge Economy Conference - Book of Abstracts*, IBM, Warwick, June, Publisher: De Montfort University, pp. 10-12. ISBN: 186 721 3563

Balogun, J. and Jenkins, M. (2003), "Re-conceiving Change Management: A Knowledge-based Perspective", *European Management Journal*, Vol 21, No 2, pp. 247-257. ISSN/ISBN: 0263-2373/03. Available: http://www.elsevier.com

Becerra-Fernandez, I. (2000), "The role of artificial intelligence technologies in the implementation of People-Finder knowledge management systems", *Knowledge-Based Systems*, Vol 13, No 5, pp. 315-320. Available: http://www.sciencedirect.com/science/

Beesley, L.G.A. and Cooper, C. (2008), "Defining knowledge management (KM) activities: towards consensus", *Journal of Knowledge Management*, Vol 12 No 3, pp. 48-62. Available: http://www.emeraldinsight.com

Benbasat, I.G. (1984), "An Analysis of Research Methodologies", in McFarlan F.W. (ed.), *The Information Systems Research Challenge*, Harvard Business School Press, Boston, MA.

Benbasat, I.G., Goldstein, D.K. and Mead, M. (1987), "The case research strategy in studies of information systems", *MIS Quarterly*, Vol 11, No 3, pp. 369-386.

Bhatt, G.D. (2000), "Organizing knowledge in the knowledge development cycle", *International Journal of Knowledge Management*, Vol 4, No 1, pp. 15-26. Available: http://www.emeraldinsight.com/rpsv/~1119/v4n1/s2/p15

Bhatt, G.D. (2001), "Knowledge management in organisations: examining the interaction between technologies, techniques, and people", *Journal of Knowledge Management*, Vol 5, No 1, pp. 68-75. Available: http://www.emerald-library.com/ft

Bishop, J., Bouchlaghem, D., Glass, J. and Matsumoto, I. (2008), "Ensuring the effectiveness of a knowledge management initiative", *Journal of Knowledge Management*, Vol 12, No 4, pp. 16-29. Available: http://www.emeraldinsight.com

Boisot, M. (1998), *Knowledge Asset: Securing a Competitive Advantage in the Information Economy*, Oxford University Press, New York, NY.

Bonoma, T.V., (1985), "Case Research in Marketing: Opportunities, Problems and a Process", *Journal of Marketing Research*, Vol 22, pp. 199-208.

Bontis, N. (1998), "Intellectual capital: an exploratory study that develops measures and models", *Management Decision*, Vol 36, No 2, pp. 63-76. Available: http://www.ingenta.com

Bontis, N. (2000), "Intellectual capital and business performance in Malaysian industries", *Journal of Intellectual Capital*, Vol 1, No 1, pp. 85-100. Available: http://www.emerald-library.com

Bontis, N. and Nikitopoulos, D. (2001), "Thought leadership on intellectual capital", *Journal of Intellectual Capital*, Vol 2, No 3, pp. 183-191. Available: http://www.emerald-library.com/ft

Bontis, N., Dragonetti, N.C., Jacobsen, K. and Roos, G. (1999), "The Knowledge Toolbox: A Review of the Tools Available to Measure and Manage Intangible Resources", *European Management Journal*, Vol 17, No 4, pp. 391-402. Available: http://www.ingenta.com

Bose, R. (2004), "Knowledge management metrics", *Industrial Management & Data Systems*, Vol 104, No 6, pp. 457-468.

Bostock, A. (2002), *Avoiding Information Overload: Knowledge Management on the Internet*, JISC online. Available: http://www.jisc.ac.uk/whatwedo/services/techwatch/reports/horizonscanning/hs0202.aspx [accessed 5th May 2004]

Boutilier, M., Mason, R. and Rootman, U. (1997), "Community action and reflective practice in health promotion research", *Health Promotion International*, Vol 12, No 1, pp. 69-78.

Bradley, J.H., Paul, R., Seeman, E. (2006), "Analyzing the structure of expert knowledge", *Information & Management*, No 43, pp. 77–91. Available: http://www.elsevier.com/locate/dsw

Bray, D.A. (2008),"Information Pollution, Knowledge Overload, Limited Attention Spans, and Our Responsibilities as IS Professionals", *Global Information Technology Management Association (GITMA) World Conference*, June. Available: http://ssrn.com/abstract=962732

Brelade, S. and Harman, C. (2000), "Using human resources to put knowledge to work", *Knowledge Management Review*, Vol 3, No 1, pp. 26-29.

Brown, J. and Duguid, P. (2000), "Balancing act: how to capture knowledge without killing it", *Harvard Business Review*, May-June, pp. 73-80.

Buckman, R.H. (1998), "Knowledge sharing at Buckman Labs", *Journal of Business Strategy*, Vol 19, No 1, pp. 11-15. Available: http://www.emeraldinsight.com

Burgess, A.K. (2006), *Effective Means of Improving Email Communication*, PhD Thesis, Loughborough University, UK.

Burke, M.E. (2003), "Philosophical and theoretical perspectives of organisational structures as information processing systems", *Journal of Documentation*, Vol 59, No 2, pp. 131-142. Available: http://www.emeraldinsight.com/0022-0418.htm

Burke, M.E. (2008), "From smart and corporate to urban and edgy: Revitalising organisations in turbulent environments", *International Journal of Organizational Analysis*, Vol 16, No 1/2, pp. 50-60. Available: www.emeraldinsight.com/1934-8835.htm

Burnett, S., Illingworth, L. and Webster, L. (2004), "Knowledge auditing and mapping: a pragmatic approach", *Knowledge and Process Management*, Vol 11, No 1, pp. 25-37.

Burrell, G. and Morgan, G. (1979), *Sociological Paradigms and Organisational Analysis*, Heineman, London.

Burry, M., Coulson, J., Preston, J. and Rutherford, E. (2001), "Computer-aided design decision support: interfacing knowledge and information", *Automation in Construction*, Vol 10, pp. 203-215. Available: http://www.elsevier.com/locate/autcon

Butcher, G. and Schroeder, C. (1999), "A model for addressing software volatility in new system development", *International Journal of Information Sciences*, No 118, pp. 135-140. ISSN: 0020 0255/99

Call, D. (2005), "Knowledge management – not rocket science", *Journal of Knowledge Management*, Vol 9, No 2, pp. 19-30. Available: http://www.emeraldinsight.com

Camelo-Ordaz, C., Martin-Alcazar, F. and Valle-Cabrera, R. (2003), "Intangible resources and strategic orientation of companies: An Analysis in the Spanish context", *Journal of Business Research, Vol* 56, pp. 95-102, ISSN: 0148 2963/02

Campbell, A. and Luchs, K. (1997), *Core competency-based strategy*, International Thomson Business Press, London.

Carayannis, E.G. (1998), "The strategic management of technological learning in project/program management: the role of extranets, intranets and intelligent agents in knowledge generation, diffusion, and leveraging", *Technovation,* Vol 18, No 11, pp. 697-703. Available: http://www.sciencedirect.com/science/

Carmeli, A. (2001), "High- and low-performance firms: do they have different profiles of perceived core intangible resources and business environment?", *Technovation*, Vol 21, pp. 665-668. ISSN: 0166 4972.

Carpenter, S. and Rudge, S. (2003), "A self-help approach to knowledge management benchmarking, *Journal of Knowledge Management*, Vol 7, No 5, pp. 82-95. Available: http://www.emeraldinsight.com

Carrillo, P., Robinson, H., Al-Ghassani, A. and Anumba, C. (2004), "Knowledge Management in UK Construction: Strategies, Resources and Barriers", *Project Management Journal*, Vol 35, No 1, pp. 46-56.

Cavaye, A.L.M. (1996), "Case study research: A multi-faceted research approach for IS", *Information Systems Journal*, Vol 6, No 3, pp. 227-242.

CEB (2007), *Strengthening IT-Business Engagement*, Corporate Executive Board (CEB). Available: http://www.cio.executiveboard.com [accessed 12th November 2007]

Chang, M.-Y., Hung, Y.-C. and Yen, D.C. (2008), "The research on the critical success factors of knowledge management and classification framework project in the Executive Yuan of Taiwan Goverment", *Expert Systems with Applications*, doi:10.1016/j.eswa.2008.06.060. Available: http://www.sciencedirect.com

Chase, R. (2006), "A decade of knowledge management", *Journal of Knowledge Management*, Vol 10, No 1. Available: http://www.emeraldinsight.com

Chase, R.L. (1997a), "The Knowledge-Based Organization: An International Survey", *Journal of Knowledge Management*, Vol 1, No 1, pp. 38-49. Available: http://www.ingenta.com

Chase, R.L. (1997b), "Knowledge Management Benchmarks", *Journal of Knowledge Management*, Vol 1, No 1, pp. 83-92. Available: http://www.ingenta.com

Chen, M.-Y. and Chen, A.-P. (2006), "Knowledge management performance evaluation: a decade review from 1995 to 2004", *Journal of Information Science*, Vol 32, No 1, pp. 17–38. Available: http://jis.sagepub.com

Chen, M.-Y., Huang, M.-J., Cheng, Y.-C. (2008), "Measuring knowledge management performance using a competitive perspective: An empirical study", *Expert Systems with Applications*, doi:10.1016/j.eswa.2008.10.067. Available: http://www.sciencedirect.com

Chinowsky, P.S. and Carrillo, P.M. (2007), "Knowledge Management to Learning Organization Connection", *Journal of Management in Engineering*, Vol 23, No 3, pp. 122-130.

Choi, B. and Lee, H. (2002), "Knowledge management strategy and its link to knowledge creation process", *Expert Systems with Applications*, Vol 23, pp. 173-187. Available: http://www.elsevier.com/locate/eswa

Choi, B. and Lee, H. (2003), "An empirical investigation of KM styles and their effect on corporate performance", *Information & Management*, Vol 40, pp. 403-417. Available: http://www.elsevier.com/locate/dsw

Chong, C.W., Holden, T., Wilhelmij, P. and Schmidt, R.A. (2000), "Where does knowledge management add value?", *Journal of Intellectual Capital*, Vol 1, No 4, pp. 366-380. Available: http://www.emerald-library.com

Coates, K. (2009), *Knowledge Overload.* Available: http://www.insidehighered.com/views/2009/03/23/coates [accessed 4th May 2009]

Connelly, C.E. and Kelloway, E.K. (2003), "Predictors of employees' perceptions of knowledge sharing cultures", *Leadership and Organisation Development Journal*, Vol 24, No 5, pp. 294-301. ISSN/ISBN: 0143-7739. Available: http://www.ingenta.com

Cornford, T. and Smithson, S. (1996), *Project Research in Information Systems*, Macmillian Press Ltd, London.

Coulson-Thomas, C.J. (1997), "The Future of the Organization: Selected Knowledge Management Issues", *Journal of Knowledge Management*, Vol 1, No 1, pp. 15-26. Available: http://www.emeraldinsight.com

Danwood (2004), *Danwood Working Solutions: Corporate Presentation.* Available: http://www.danwood.co.uk [accessed 10th Nov 2004]

Danwood (2008), *About Danwood: History and Group Info.* Available: http://www.danwood.co.uk [accessed 11th Feb 2009]

Davenport, T.H. (1993), *Process Innovation: Reengineering Work through Information Technology*, Harvard Business School Press, Boston, MA.

Davenport, T.H. and Probst, G.J.B. (eds.) (2002), *Knowledge management case book: Siemens best practices*, Wiley, New York.

Davenport, T.H. and Prusak, L. (1998), *Working Knowledge: How Organizations Manage What They Know*, Harvard Business School Press, Boston, MA.

Davenport, T.H., De Long, D.W. and Beers, M.C. (1998), "Successful knowledge management projects", *Sloan Management Review*, Vol 39, No 2, pp. 43-57.

Dawson, R. and Balafas, P. (2008), "What Problem Are We Trying to Solve? - A Case Study of a Failed Knowledge Management Initiative", in Harorimana, D. and Watkins, D. (eds.), *9th European Conference on Knowledge Management*, Academic Publishing Limited, Reading, UK, pp. 139-146. ISBN: 978-1-906638-11-5 CD. Available: http://academic-conferences.org/2-proceedings.htm

De Chazal, M. (2003), *The Development and Use of a Toolset for Industrial IT Portfolio Management*, PhD Thesis, Loughborough University, UK.

Debély J., Dubosson M. and Fragnière E. (2007), "The Consequences of Information Overload in Knowledge Based Service Economies", *ESSHRA European Conference*, Switzerland, 12-13 June, Berne, Switzerland. Available: http://www.hes-so.ch/documents/showFile.asp?ID=2539 [accessed 4th April 2008]

Dekker, R. and de Hoog, R. (2000), "The monetary value of knowledge assets: a micro approach", *Expert Systems with Applications*, Vol 18, pp. 111-124. Available: http://www.elsevier.com/locate/eswa

Del-Rey-Chamorro, F.M., Roy, R. and Van Wegen, B. (2003), "A framework to create key performance indicators for knowledge management solutions", *Journal of Knowledge Management*, Vol 7, No 2, May, pp. 46-62. Available: http://www.ingenta.com

Denning, S. (1999), "The Knowledge Perspective: A New Strategic Vision", in Ruggles, R.L. and Holtshouse, D. (eds.), *The Knowledge advantage: 14 visionaries define marketplace success in the new economy*, Capstone, Oxford, pp. 143-161.

Denscombe, M. (2002), *The Good Research Guide for small-scale social research projects*, Open University Press, Buckingham.

Denton, D.K. (2001), "Better decitions with less information", *Industrial Management*, Vol 43, No 4, pp. 21-25.

Desouza, K.C. (2003), "Knowledge management barriers: Why the technology imperative seldom works", *Business Horizons*, Jan-Feb, pp. 25-29. Available: http://www.sciencedirect.com

Desouza, K.C. and Raider, J.J. (2006), "Cutting corners: CKOs and knowledge management", *Business Process Management Journal*, Vol 12, No 2, pp. 129-134.

Despres, C. and Chauvel, D. (1999), "Knowledge management(s)", *Journal of Knowledge Management*, Vol 3, No 2, pp. 110-120. Available: http://www.ingenta.com

Devane, S. and Wilson, J. (2008), "Business Benefits of Non-Managed Knowledge", in Harorimana, D. and Watkins, D. (eds.), *9th European Conference on Knowledge Management*, Academic Publishing Limited, Reading, UK, pp. 147-153. ISBN: 978-1-906638-11-5 CD. Available: http://academic-conferences.org/2-proceedings.htm

Dover, D. (2008), *Danwood Annual Report 2007*. Available: http://www.danwood.co.uk [accessed 11th Feb 2009]

Drucker, P.F. (1992), "The new society of organizations", *Harvard Business Review*, September/October, pp. 95-105.

Dysart, J. and Nixon, C. (eds.) (2001), *KnowledgeNets 2001: collected presentations*, Information Today, Medford, N.J.

Edvinsson, L. (1997), "Developing intellectual capital at Skandia", *Long Range Planning*, Vol 30, No 3, pp. 366-73.

Edwards, A. and Talbot, R. (1994), *The Hard-pressed Researcher: a Research Handbook for the Caring Professions*, Longman, London.

Egbu, C. (2004), "Managing knowledge and intellectual capital for improved organisational innovations in the construction industry: an examination of critical success factors", *Engineering, Construction and Architectural Management Journal*, Vol 11, No 5, pp. 301-315.

Eisenhardt, K.M. (1989), "Building Theories from Case Study Research", *Academy of Management Review*, Vol 14, No 4, pp. 532-550.

Ellerman, D., Denning, S. and Hanna, N. (2001), "Active learning and development assistance", *Journal of Knowledge Management*, Vol 5, No 2, pp. 171-179. Available: http://emerald-library.com/ft

Elliott, J. (1991), *Action Research for Educational Change*, Open University Press, Buckingham.

Ellis, S. (2003), "Cultivating a knowledge culture", *Knowledge Management Magazine*, Vol 7, No 4. Available: http://www.kmmagazine.com

Eyler, A.N. (2001), "Corporate knowledge management", *ProTopics*, July/August, pp. 6-9. Available: http://www.deloitte.com/dt/cda/doc/content/JulyAugustEnglish.pdf [accessed 7th Nov 2002]

Firestone, J. (2003), "Knowledge Management and Information Technology: The Relationship", *Intelligent KM*, March. Available: http://www.intelligentkm.com [accessed 4th Feb 2004]

Firestone, W.A. (1987), "Meaning in method: The rhetoric of quantitative and qualitative research", *Education Researcher*, Vol 16, No 7, pp. 16-21.

Foote, N., Matson, E., Weiss, L. and Wenger, E. (2002), "Leveraging Group Knowledge for High-Performance Decision-Making", *Organizational Dynamics*, Vol 31, No 3, pp. 280-295. Available: http://www.organizational-dynamics.com

Forryan, M. (2004a), *Knowledge Management And Service Improvement - Cookbook A: Guide to Applying Knowledge Management for Service Improvement.* Available: http://www.localegov.gov.uk [accessed 3rd February 2006]

Forryan, M. (2004b), *Metadata Report - Knowledge Management : Work Stream 5 (Tacit Knowledge).* Available: http://www.localegov.gov.uk [accessed 3rd February 2006]

Freund, E. (2003), *Manage Knowledge?* Available: http://km-forum.org/wwwboard/messages/567.html [accessed 3rd July 2004]

Fuller, P., Dainty, A. and Thorpe, T. (2008), "Using Measurement as an Enabler for the Implementation of Knowledge Management and Learning Processes", in Harorimana, D. and Watkins, D. (eds.), *9th European Conference on Knowledge Management*, Academic Publishing Limited, Reading, UK, pp. 201-208. ISBN: 978-1-906638-11-5 CD. Available: http://academic-conferences.org/2-proceedings.htm

Galliers, R. (1992), *Information systems research: Issues, methods, and practical guidelines*, Blackwell Scientific Publications, Oxford.

Gammelgaard, J. and Ritter, T. (2005), "The knowledge retrieval matrix: codification and personification as separate strategies", *Journal of Knowledge Management*, Vol 9, No 4, pp. 133-143. Available: http://www.emeraldinsight.com

Gao, F., Li, M. and Clarke, S. (2008), "Knowledge, management, and knowledge management in business operations", *Journal of Knowledge Management*, Vol 12, No 2, pp. 3-17. Available: http://www.emeraldinsight.com

Gao, F., Meng L. and Nakamori, Y. (2002), "Systems thinking on knowledge and its management: systems methodology for knowledge management", *Journal of Knowledge Management*, Vol 6, No 1, pp. 7-17. Available: http://www.emeraldinsight.com/1367-3270.htm

Garavan, T.N., Gunnigle, P. and Morley, M. (2000), "Contemporary HRD research: a triarchy of theoretical perspectives and their prescriptions for HRD", *Journal of European Industrial Training*, Vol 24, No 2/3/4, pp. 65-93.

Garcia-Perez, A. and Ayres, R. (2008), "Collaborative Development of Knowledge Representations – A Novel Approach to Knowledge Elicitation and Transfer", in Harorimana, D. and Watkins, D. (eds.), *9th European Conference on Knowledge Management*, Academic Publishing Limited, Reading, UK, pp. 217-224. ISBN: 978-1-906638-11-5 CD. Available: http://academic-conferences.org/2-proceedings.htm

Garvin, D.A. (1993). "Building a learning organisation", *Harvard Business Review*, Vol 71, No 4, pp. 78-91.

Glaser, B.G. and Strauss, A.L. (1967), *The Discovery of Grounded Theory: Strategies for Qualitative Research*, Sociology Press.

Gold, A.H., Malhotra, A. and Segars, A.H. (2001), "Knowledge management: An organisational capabilities perspective", *Journal of Management Information Systems*, Vol 18, No 1, pp. 185-214.

Goldratt, E. (1994), *Theory of Constraints*, Gower Publishing Ltd, Aldershot, UK.

Goldratt, E. and Cox, J. (1993), *The Goal: a process of ongoing improvement*, Gower Publishing, Aldershot, UK.

Gooijer, J.d. (2000), "Designing a knowledge management performance framework", *Journal of Knowledge Management*, Vol 4, No 4, pp. 303-310. Available: http://www.emerald-library.com

Gordon, J.L. (2005), *Interviewing – a Knowledge Based Approach.* Available: http://www.akri.org [accessed 1st February 2006]

Greiner, M.E., Bohmann, T. and Krcmar, H. (2007), "A strategy for knowledge management", *Journal of Knowledge Management*, Vol 11, No 6, pp. 3-15. Available: http://www.emeraldinsight.com

Guba, E.G. and Lincoln, Y.S. (1994), "Competing paradigms in qualitative research", in Denzin, N.K. and Lincoln, Y.S. (eds.), *Handbook of Qualitative Research*, Sage, Thousand Oaks, pp. 105-117.

Gunasekaran, A., Love, P.E.D., Rahimi, F. and Miele, R. (2001), "A model for investment justification in information technology projects", *International Journal of Information Management*, Vol 21, No 5, pp. 349-364. Available: http://www.sciencedirect.com/science/

Gunnlaugsdottir, J. (2003), "Seek and you will find, share and you will benefit : organising knowledge using groupware systems", *International Journal of Information Management*, Vol 23, No 5, pp. 363-380.

Gurteen, D. (1999), "Creating a Knowledge Sharing Culture", *Knowledge Management Magazine*, Vol 2, No 5. Available: http://www.kmmagazine.com

Gurteen, D. (2008), *Knowledge management.* Available: http://en.wikipedia.org/wiki/Knowledge_Management [accessed 16th Dec 2008]

Hack, B. (2002), *Reducing Time to Competency: The Human Resources Challenge*, APQC Knowledge Sharing Network. Available: http://www.apqc.org/portal/apqc/ksn [accessed 22nd May 2005]

Hall, M. (2006), "Knowledge management and the limits of knowledge codification", *Journal of Knowledge Management*, Vol 10, No 3, pp. 117-126. Available: http://www.emeraldinsight.com

Hall, R. and Andriani, P. (2003), "Managing knowledge associated with innovation", *Journal of Business Research*, Vol 56, February, pp. 145-152. Available: http://www.ingenta.com

Handy, C.B. (1985), *Understanding Organisations*, Penguin, Harmoundsworth.

Harvey, M. and Lusch, R. (1997), "Protecting the Core Competencies of a Company: Intangible Asset Security", *European Management Journal*, Vol 15, No 4, pp. 370-380. Available: http://www.elsevier.com

Hasanali, F. (2002), *Critical success factors of knowledge management.* Available: http://www.kmadvantage.com/docs/km_articles/Critical_Success_Factors_of_KM.pdf [accessed 17 October 2005]

HBOS (2008), *HBOS Group Facts.* Available: http://www.HBOSplc.com [accessed 7th Aug 2008]

Healy, M. and Perry, C. (2000), "Comprehensive Criteria to Judge Validity and Reliability of Qualitative Research Within the Realism Paradigm", *Qualitative Market Research*, Vol 3, No 3, pp. 118-126.

Heisig, P. (2001), "Business Process Oriented Knowledge Management", in Mertins, K., Heisig, P. and Vorbeck, J. (eds.), *Knowledge Management: Best Practises in Europe*, Springer, Berlin, pp 13-36.

Heylighen, F. (2002), *Complexity and Information Overload in Society: why increasing efficiency leads to decreasing control*, Free University of Brussels, Belgium.

Hicks, R., Dattero, R. and Galup, S. (2006), "The five-tier knowledge management hierarchy", *Journal of Knowledge Management*, Vol 10, No 1, pp. 19-31. Available: http://www.emeraldinsight.com

Hiebler, R. (1996), Benchmarking Knowledge Management, *Strategy and Leadership*, Vol 24, No 2, pp. 22-29.

Hitt, M.A., Ireland, R.D. and Lee, H. (2000), " Technological learning, knowledge management, firm growth and performance: an introductory essay", *Journal of Engineering and Technology Management*, Vol 17, No 3-4, pp. 231-246. Available: http://www.sciencedirect.com/science/

Hofer-Alfeis, J. (2008), "Knowledge management solutions for the leaving expert issue", *Journal of Knowledge Management*, Vol 12, No 4, pp. 44-54. Available: http://www.emeraldinsight.com

Holden, N. (2002), Cross-cultural management : a knowledge management perspective, *Financial Times / Prentice Hall*, Harlow.

Holsapple, C.W. and Joshi, K.D. (2000), "An investigation of factors that influence the management of knowledge in organizations", *Journal of Strategic Information Systems*, Vol 9, No 2/3, pp. 235-261.

Holsapple, C.W. and Joshi, K.D. (2002), "Knowledge manipulation activities: results of a Delphi study", *Information & Management*, Vol 39, pp. 477-490.

Holsapple, C.W. and Singh, M. (2001), "The knowledge chain model: activities for competitiveness", *Expert Systems with Applications*, Vol 20, No 1, January, pp. 77-98. Available: http://www.sciencedirect.com/

Horner, C. and Westacott, E. (2000), *Thinking through Philosophy*, Cambridge University Press, Cambridge, UK.

Horner-Reich, B. (2007), "Managing knowledge and learning in IT projects: a conceptual framework and guidelines for practice", *Project Management Journal*, Vol. 38 No. 2, pp. 5-17.

HSBC (2008), *HSBC Group Fact Sheet*. Available: http://www.hsbc.com [accessed 22nd Sep 2008]

Huysman, M. (2002), *Knowledge Sharing in Practice*, SAP Design Guild. Available: http://www.sapdesignguild.org/editions/edition5/km_mh.asp [accessed 23rd May 2005]

Iivari, J. (1991), "A paradigmatic analysis of contemporary schools of IS development", *European Journal of Information Systems*, Vol 1, No 4, pp. 249-272.

Irani, Z., Grieve, R.J. and Race, P. (1999), "A case study approach to carrying out information systems research: A critique", *International Journal of Computer Applications in Technology*, Vol 12, No 2, pp. 190-198.

Jackson T.W. (2001), *The Cost Effectiveness of Electronic Communication*, PhD Thesis, Loughborough University, UK.

Jackson, M.C. (1990), "Beyond a System of Systems Methodologies", *Journal of Operational Research Society*, Vol 41, No 8, pp. 45-50.

Jackson, T.W., Dawson, R.J. and Wilson, D. (2003), "Reducing the Effect of Email Interruptions on Employees", *International Journal of Information Management*, Vol 23, No 1, pp. 55-65, ISSN: 0268 4012.

James, R.J. and Jones, A.P. (1979), "Psychological climate: Dimensions and relationships of individual and aggregated work environment perceptions", *Organisational Behaviour and Human Performance*, Vol 23, pp. 201-250.

James, R.J. and Jones, A.P. (1979), "Psychological climate: Dimensions and relationships of individual and aggregated work environment perceptions", *Organisational Behaviour and Human Performance*, Vol 23, pp. 201-250.

Janz, B.D. and Prasarnphanich, P. (2003), "Understanding the Antecedents of Effective KM: The Importance of a Knowledge-Centered Culture", *Decision Sciences*, Vol 34, No 2, pp. 351-384, ISSN/ISBN: 0011-7315. Available: http://www.ingenta.com

Jarke, M. (2002), "Experience-based knowledge management: a cooperative information systems perspective", *Control Engineering Practice*, Vol 10, pp. 561-569. Available: http://www.elsevier.com/locate/conengprac

Järvinen, P. (2001), *On Research Methods*, Juvenes-Print, Tampere.

Jashapara, A. (2004), *Knowledge Management: An Integrated Approach*, Prentice Hall, Harlow. ISBN: 0273682989.

Jennex, M.E. (2005), "Is Knowledge Management a Discipline?", *International Journal of Knowledge Management*, Vol 1, No 1, January-March, pp. i-v (editorial preface). Available: http://www.idea-group.com

Johannessen J-A., Olaisen J. and Olsen, B. (2001), "Mismanagement of tacit knowledge: the importance of tacit knowledge, the danger of information technology, and what to do about it", *International Journal of Information Management*, Vol 21, pp. 3-20. Available: http://www.elsevier.com/locate/ijinfomgt

Joia, L.A. (2000), "Measuring intangible corporate assets: Linking business strategy with intellectual capital", *Journal of Intellectual Capital*, Vol 1, No 1, pp. 64-84. Available: http://www.ingenta.com

Jones, N., Herschel, R. and Moesel, D. (2003), "Using knowledge champions to facilitate knowledge management", *Journal of Knowledge Management*, Vol 7, No 1, pp. 49-77. Available: http://www.emeraldinsight.com

Jones, R. (ed.) (2001), *KM World Conference and Exposition - Captured knowledge: presentations and notes*, Information Today, Medford, N.J.

Joshi, K. (1998), *An investigation of knowledge management characteristics: synthesis, delphi study, analysis,* Dissertation, University of Kentucky, Lexington, KY.

Kalling, T. (2003), "Knowledge management and the occasional links with performance", *Journal of Knowledge Management*, Vol 7 No 3, pp. 67-81. Available: http://www.emeraldinsight.com

Kalseth, K. and Cummings, S. (2001), "Knowledge Management: development strategy or business strategy?", *Information Development*, Vol 17, No 3, pp. 163-172.

Kamara, J.M., Anumba, C.J., and Carrillo, P.M. (2002), "A CLEVER approach to selecting a knowledge management strategy", *International Journal of Project Management*, Vol 20, pp. 205-211. Available: http://www.elsevier.com/locate/ijproman

Karhu, K. (2002), "Expertise cycle - an advanced method for sharing expertise", *Journal of Intellectual Capital*, Vol 3, No 4, pp. 430-446. Available: http://www.emeraldinsight.com/1469-1930.htm

Kelleher, M. (2006), *Knowledge retention - replacing the traditional exit interview*, KnowledgeBoard. Available: http://www.knowledgeboard.com/item/2661 [accessed 7th April 2006]

Kellogg, D.L. and Nie, W. (1995), "A framework for strategic service management", *International Journal of Operations Management*, Vol 13, No 4, pp. 323-337. Available: http://www.sciencedirect.com/science/

Kemp, S. (2006), *Quality Management Demystified*, McGraw Hill Professional. ISBN: 0071449086

Kettinger, W.J. and Grover, V. (1995), "Toward a theory of business process change Management", *Journal of Management Information Systems*, Vol 12, No 1, pp. 9-30.

Kim, J-A (2006), "Measuring the Impact of Knowledge Management", *IFLA Journal*, Vol 32, No 4, pp. 362-367.

Klein, H.K. and Myers, M.D. (1999), "A Set of Principles for Conducting and Evaluating Interpretative Field Studies in IS", *MIS Quarterly*, Vol 23, No 1, pp. 23-30.

Kluge, J., Stein, W., Licht, T., Bendle, A. (2001), *Knowledge unplugged: the McKinsey & Company global survey on knowledge management*, Palgrave, Basingstoke.

Knowledge Harvesting Inc (2003), *The 10-Page Guide to Eliciting Implicit Knowledge*. Available: http://www.knowledgeharvesting.org [accessed 17th February 2006]

Kondo, F. (2006), *Five Steps to a Successful Knowledge Management Initiative*, Accela Communications Inc, January. Available: http://www.itworld.com [accessed 13th March 2006]

KPMG, M.C. (1998), *Knowledge Management Research Report*. Available: http://www.kpmg.co.uk [accessed 12th November 2004]

Lambe, P. (2002), "From Rhetoric to Reality: KM and Success in the SME World", *The Business Times*, Singapore, November. Available: http://greenchameleon.com/thoughtpieces/rhetoricreality.pdf [accessed 11th December 2004]

Lau, H.C.W., Wong, C.W.Y., Hui, I.K. and Pun K.F. (2003), "Design and implementation of an integrated knowledge system", *Knowledge-Based Systems*, Vol 16, pp. 69-76. Available: http://www.elsevier.com/locate/knosys

Layder, D. (1993), *New Strategies in Social Research*, Polity Press, Cambridge.

Lee, A.S. (1989), "A Scientific Methodology for Case Studies", *Management Information Systems Quarterly*, Vol 12, pp. 33-50.

Lehner, F., Amende, N. and Wildner, S. (2008), "Evaluating the Factors of Knowledge Management Success", in Harorimana, D. and Watkins, D. (eds.), *9th European Conference on Knowledge Management*, Academic Publishing Limited, Reading, UK, pp. 409-416. ISBN: 978-1-906638-11-5 CD. Available: http://academic-conferences.org/2-proceedings.htm

Leonard, D. (1995), *Wellsprings of knowledge: Building and sustaining the sources of innovation*, Harvard Business School Press, Boston.

Lev, B. (2001), "Intangibles: Management, Measurement and Reporting", *The International Journal of Accounting*, Vol 36, pp. 501-503. ISSN: 0020 7063.

Levett, G.P. and Guenov, M.D. (2000), "A methodology for knowledge management implementation", *Journal of Knowledge Management*, Vol 4, No 3, pp. 258-269. Available: http://www.emeraldinsight.com

Lewis III, R.R. (2009), "Editorial: Knowledge overload, wisdom underload", *Ecological Engineering*, Vol 35, No 3, pp. 341-342. Available: http://www.sciencedirect.com

Lexbe (2008), *Pages in a MB/GB e-Discovery Calculator*. Available: http://www.lexbe.com/hp/Pages-Megabyte-Gigabyte.aspx [accessed 6th May 2009]

Liao, S-H. (2003), "Knowledge management technologies and applications - literature review from 1995 to 2002", *Expert Systems with Applications*, Vol 25, No 2, pp. 155-164. Available: http://www.elsevier.com/locate/eswa

Liebowitz, J. (1999), "Key ingredients to the success of an organization's knowledge management strategy", *Knowledge and Process Management*, Vol 6, No 1, pp. 37-40.

Liebowitz, J. and Megbolugbe, I. (2003), "A set of frameworks to aid the project manager in conceptualizing and implementing knowledge management initiatives", *International Journal of Project Management*, Vol 21, pp. 189-198.

Liebowitz, J. and Wright, K. (1999), "Does measuring knowledge make cents", *Expert Systems with Applications*, Vol 17, pp. 99-103. Available: http://www.elsevier.com/locate/eswa

Liebowitz, J., Rubenstein-Montano, B., McCaw, D., Buchwalter, J., Browning, C., Newman, B. and Rebeck, K. (2000), "The knowledge audit", *Knowledge and Process Management*, Vol 7, No 1, pp. 3-10.

Lierni, P.C. and Ribiere, V.M. (2008), "The relationship between improving the management of projects and the use of KM", *VINE: The Journal of Information and Knowledge Management Systems*, Vol 38, No 1, pp. 133-146. Available: http://www.emeraldinsight.com

Lincoln, Y.S. and Guba, E.G. (1985), *Naturalistic Inquiry*, Sage Publications, Beverly Hills.

Loermans, J. and Fink, D. (2005), "How organizations evaluate their knowledge management projects: a metastudy of the period 1992-2002", *Knowledge Management Research & Practice*, Vol 3, pp. 125-135.

Luan, J. and Serban, A.M. (2002), "Technologies, products, and models supporting knowledge management", *New Directions for Institutional Research*, No 113, pp. 85-104.

Lucas, L.M. and Ogilvie D. (2006), "Things are not always what they seem: How reputations, culture, and incentives influence knowledge transfer", *The Learning Organization*, Vol 13, No 1, pp. 7-24. Available: http://www.emeraldinsight.com

Lucier, C. (2003), "When knowledge adds up to nothing: Why knowledge management fails and what you can do about it", *Developing and Learning in Organizations*, Vol 17, No 1, pp. 32-35. Available: http://www.emeraldinsight.com

Lyman, P., Varian, H.R., Dunn, J., Strygin, A., Swearingen, K. (2000), *How Much Information?* Available: http://www2.sims.berkeley.edu/research/projects/how-much-info/ [accessed 29th November 2002]

Lytras, M.D. and Pouloudi, A. (2003), "Project management as a knowledge management primer: the learning infrastructure in knowledge-intensive organizations: projects as knowledge transformations and beyond", *The Learning Organization*, Vol 10, No 4, pp. 237-250.

Macdonald, J. (1999), *Understanding knowledge management in a week,* Hodder & Stoughton, London.

Macintosh, A. (1999), *Position Paper on Knowledge Asset Management.* Available: http://www.aiai.ed.ac.uk/~alm/kam.html [accessed 28 Jan 2003]

MacNeil, C.M. (2003), "Line managers: facilitators of knowledge sharing in teams", *Employee Relations*, Vol 25, No 3, pp. 294-307. ISSN/ISBN: 0142-5455. Available: www.emeraldinsight.com/0142-5455.htm

Magnani, D. (2001), "How to Create Business Value with Knowledge Management Solutions That Work", in Jones, R. (ed.), *Captured Knowledge: Presentations and Notes of the Fifth KM World Conference and Exposition*, Information Today Inc, Medford, New Jersey, pp. 181-96.

Maier, R. and Remus, U. (2003), "Implementing process-oriented knowledge management strategies", *Journal of Knowledge Management*, Vol 7, No 4, pp. 62-74. Available: http://www.emeraldinsight.com

Makopoulou, K. (2008), *Continuing professional development for physical education teachers towards situated, sustained and progressive learning*, PhD Thesis, Loughborough University.

Malhotra, Y. (1998), "Tools@work: deciphering the knowledge management hype", *The Journal for Quality and Participation*, Vol 21, No 4, pp. 58-60.

Manasco, B. (1996), "Leading Firms Develop Knowledge Strategies", *Knowledge Inc Magazine*, October. Available: http://www.webcom.com/quantera/Apqc.html

Martiny, M. (1998), "KM at HP consulting", *Organisational Dynamics*, August, pp. 71-77.

Marwick, A.D. (2001), "Knowledge management technology", *IBM Systems Journal*, Vol 40, No 4, pp. 814-830.

Massey, A., Montoya-Weiss, M. and O'Driscoll, T. (2002), "Knowledge management in pursuit of performance: insights from Nortel networks", *MIS Quarterly*, Vol 26, No 3, pp. 269-289.

McCann, J. III and Buckner, M. (2004), "Strategically integrating knowledge management initiatives", *Journal of Knowledge Management*, Vol 8, No 1, pp. 47-63. Available: http://www.emeraldinsight.com

McDermott, R. and O'Dell, C. (2001), "Overcoming cultural barriers to sharing knowledge", *Journal of Knowledge Management*, Vol 5, No 1, pp. 76-85. ISSN/ISBN: 1367-3270. Available: www.emeraldlibrary.com

McElroy, M. (2001), "Second-Generation KM: A White Paper", in Jones, R. (ed.), *Captured Knowledge: Presentations and Notes of the Fifth KMWorld Conference and Exposition*, Information Today Inc, Medford, New Jersey, pp 204-212.

McElroy, M.W. (2000), "The Professionalization of Knowledge Management", *Presentaitons of 'En Line @ 2000' Conference*, Cintermex, Monterrey, NL, Mexico. Available: http://enlinea.mty.itesm.mx/presentaciones/MarkMcElroy.ppt [accessed 9th November 2004]

Metaxiotis, K., Ergazakis, K. and Psarras, J. (2005), "Exploring the world of knowledge management: agreements and disagreements in the academic/practitioner community", *Journal of Knowledge Management*, Vol 9, No 2, pp. 6-18. Available: http://www.emeraldinsight.com

Mikkelsen, A. and Gronhaug, K. (1999), "Measuring organisational learning climate: A cross-national replication and instrument validation study among public sector employees", *Review of Public Personnel Administration*, Vol 19, No 4, pp. 31–44.

Mikkelsen, A., Ogaard, T. and Lovrich, N. (2000), "Modeling the effects of organisational setting and individual coping style on employees subjective health, job satisfaction, and commitment", *Public Administration Quarterly*, Vol 24, No 3, pp. 371-397.

Miles, M.B. and Huberman, A.M. (1994), *Qualitative data analysis*, 2nd edition, Sage, Thousand Oaks, CA.

Milton, N., Shadbolt, N., Cottam, H. and Hammersley, M. (1999), "Towards a knowledge technology for knowledge management", *International Journal of Human-Computer Studies*, Vol 51, pp. 615-641. Available: http://www.idealibrary.com (Article No: ijhc.1999.0278) [accessed 5th December 2004]

Mo, J.P.T. and Zhou, M. (2003), "Tools and methods for managing intangible assets of virtual enterprise", *Computers in Industry*, Vol 51, pp. 197-210. Available: http://www.elsevier.com/locate/compind

Moore, N. (2000), *How to do Research: The Complete Guide to Designing and Managing Research Projects*, Library Association Publishing, London.

Morey, D. (2001), "High-speed knowledge management: integrating operations theory and knowledge management for rapid results", *International Journal of Knowledge Management*, Vol 5, No 4, pp. 322-328. Available: http://www.emeraldinsight.com

Morey, D. and Frangioso, T. (1998), "Aligning an Organization for Learning: The Six Principles of Effective Learning", *Journal of Knowledge Management*, Vol 1, No 4, pp. 308-314. Available: http://www.ingenta.com

Morris, S., Meed, J. and Svensen, N. (1996), *The knowledge manager: adding value in the information age*, Financial Times / Pitman Publishing, London.

Motwani, J., Klein, D. and Harowitz, R. (1996a), "The theory of constraints in services: part 1 - the basics", *Managing Service Quality*, Vol 6, No 1, pp. 53-56. Available: http://www.emeraldinsight.com

Motwani, J., Klein, D. and Harowitz, R. (1996b), "The theory of constraints in services: part 2 - examples from health care", *Managing Service Quality*, Vol 6, No 2, pp. 30-34. Available: http://www.emeraldinsight.com

Mouritsen, J. and Larsen, H.T. (2001), "Valuing the future: intellectual capital supplements at Skandia", *Accounting, Auditing & Accountability Journal*, Vol 14, No 4, pp. 399-422. Available: http://www.emerald-library.com/ft

Myers, M.D. (1997), "Qualitative research in information systems", *MIS Quarterly*, Vol 21, No 2, pp. 241-242.

Ndlela, L.T. and Toit, A. S. A. (2001), "Establishing a knowledge management programme for competitive advantage in an enterprise", *International Journal of Information Management*, Vol 21, No 2, pp. 151-165. Available: http://www.sciencedirect.com/science/

Nelson, M.R. (2004), "We Have the Information You Want But Getting It Will Cost You: Being Held Hostage by Information Overload", *Crossroads*. Available: http://www.acm.org/crossroads/xrds1-1/mnelson.html [accessed 5th May 2005]

Nesbitt, K. (2002), *Designing a knowledge management system*. Available: http://academic.edu:2081/products/faulknerlibrary/00018382.htm [accessed 17 August 2004].

Newman, V. (1997), "Redefining Knowledge Management to Deliver Competitive Advantage", *Journal of Knowledge Management*, Vol 1, No 2, pp. 123-128. Available: http://www.ingenta.com

Newman, V. and Chaharbaghi, K (2000), "The study and practice of leadership", *Journal of Knowledge Management*, Vol 4, No 1, pp. 64-73. Available: http://emerad-library.com

Nonaka, I. (1991), "The Knowledge-Creating Company", *Harvard Business Review*, Vol 69, No 6, pp. 96-104.

Nonaka, I. (1994), "A Dynamic Theory of Organizational Knowledge Creation", *Organization Science*, Vol 5, No 1, pp 14-37.

Nonaka, I. and Takeuchi, H. (1995), *The Knowledge Creating Company: How Japanese Companies Create the Dynamics of Innovation*, Oxford University Press, Oxford, UK.

Nonaka, I., Reinmoeller, P. and Senoo D. (1998), "Management Focus: The 'ART' of Knowledge: Systems to Capitalize on Market Knowledge", *European Management Journal*, Vol 16, No 6, pp. 673-684. Available: http://www.ingenta.com

Nonaka, I., Toyama, R. and Konno, N. (2000), "SECI, Ba and Leadership: a Unified Model of Dynamic Knowledge Creation", *Long Range Planning*, Vol 33, No 1, pp. 5-34.

O'Dell, C., Wiig, K. and Odem, P. (1999), "Benchmarking unveils emerging knowledge management strategies", *Benchmarking: An International Journal*, Vol 6, No 3, pp. 202-211. Available: http://www.ingenta.com

Offsey, S. (1997), "Knowledge Management: Linking People to Knowledge for Bottom Line Results", *Journal of Knowledge Management*, Vol 1, No 2, pp. 113-122. Available: www.ingenta.com

Oldigs-Kerber, J. and Sorensen, S. (2002), "Locating and Linking Experts - A Knowledge Management Approach at Aventis Pharma", *SAP Design Guild*, September. Available: http://www.sapdesignguild.org/editions/edition5/aventis.asp [accessed 7th December 2004]

Orlikowski, W.J. and Baroudi, J.J. (1991), Studying Information Technology in Organizations: Research Approaches and Assumptions, *Information Systems Research*, Vol 2, No 1, pp. 1-28.

Pan, S.L. and Scarbrough, H. (1998), "A socio-technical view of knowledge-sharing at Buckman Laboratories", *Journal of Knowledge Management*, Vol 2, No 1, pp. 55-66. Available: http://www.emeraldinsight.com

Parsons, T.W. (2007), *Enhancing Pharmaceutical Innovation through the use of Knowledge Management*, PhD Thesis, Loughborough University, UK.

Pemberton, J.M. (2004), "KM and RIM: oil and water?", *Information Management Journal*, Vol 38, No 3, pp. 47-54.

Pena, I. (2002), "Knowledge networks as part of an integrated knowledge management approach", *Journal of Knowledge Management*, Vol 6, No 5, pp. 469-478. Available: http://www.emerald-library.com/1367-3270.htm

Perkmann, M. (2004), *Case Study: Creating a knowledge retention strategy in PLC*. Available: http://www.tva.gov/knowledgeretention [accessed 10th February 2006]

Pettigrew, A.M. (1985), "Contextualist research: A natural way to link theory and practice", in Lawler, E. (ed.), *Doing research that is useful for theory and practice*, Jossey-Bass, San-Francisco, USA.

Pfeffer, J. and Sutton, R.I. (2000), *The knowing-doing gap: how smart companies turn knowledge into action*, Harvard Business School Press, Boston.

Polanyi, M. (1967), *The Tacit Dimension*, Doubleday, New York.

Politis, J.D. (2001), "The relationship of various leadership styles to knowledge management", *Leadership & Organization Development Journal*, Vol 22, No 8, pp. 354-364. Available: http://www.emerald-library.com/ft

Popper, K. (1959), *The Logic of Scientific Enquiry*, Harper, London.

Power, M. (2001), "Imagining, measuring and managing intangibles", *Accounting, Organisations and Society Journal*, Vol 26, pp. 691-693. ISSN: 0361 3682.

Rajan, A. and Chapple, K. (1999), "Culture is Power", *Knowledge Management Magazine*, Vol 2, No 9. Available: http://www.kmmagazine.com

Rapley, K. (1997), "Accounting for the Value Generated from Innovation", *Journal of Knowledge Management*, Vol 1, No 2, pp. 157-160. Available : http://www.ingenta.com

Rapoport, R.N. (1970), "Three dilemmas in action research", *Human Relations*, Vol 23, No 4, pp. 499-513.

Ray, L.L. (2008), "Requirement for knowledge management - business driving information technology", *Journal of Knowledge Management*, Vol 12, No 3, pp. 156-168. Available: http://www.emeraldinsight.com

Realisation Inc. (2006), *Knowledge management primer.* Available: http://www.realisation.com.au/site1/Articles/Knowledge%20management%20primer.htm [accessed 7th March 2007]

Reimer, U., Margelisch, A. and Staudt, M. (2000), "EULE: A Knowledge-Based System to Support Business Processes", *Knowledge-Based Systems*, Vol 13, No 5, pp. 261-269. Available: http://www.sciencedirect.com/science/

Remenyi, D. and Williams, B. (1996), "The Nature of Research: Qualitative or Quantitative, Narrative or Paradigmatic?", *Information Systems Journal*, Vol 6, pp 131-146.

Richtel, M. (2008), "Lost in E-Mail, Tech Firms Face Self-Made Beast", *The New York Times*, June 14th, online edition. Available: http://www.nytimes.com/2008/06/14/technology/14email.html [accessed 5th May 2009]

Robertson, M. and Hammersley, G.O. (2000), "Knowledge management practices within a knowledge-intensive firm: the significance of the people management dimension", *Journal of European Industrial Training*, Vol 24, No 2-4, pp. 241-253.

Robinson, H.S., Carrillo, P.M., Anumba, C.J. and Al-Ghassani, A.M. (2004), "Developing a business case for knowledge management: the IMPaKT approach", *Construction Management and Economics*, Vol 22, September, pp. 733–743. Available: http://www.tandf.co.uk/journals

Rollett, H. (2003), *Knowledge management: processes and technologies*, Kluwer Academic, London.

Rossett, A. (2002), *Best practices, strategies, and case studies for an emerging field.* Available: http://books.mcgraw-hill.com/authors/rossett/km.htm [accessed 22nd July 2004].

Roy, R. (2001), *Industrial knowledge management: a micro-level approach*, Springer, London.

Rubenstein-Montano, B., Liebowitz, J., Buchwalter, J., McCaw, D., Newman, B. and Rebeck, K. (2001), "SMARTVision: a knowledge-management methodology", *Journal of Knowledge Management*, Vol 5, No 4, pp. 300-310. Available: http://emerald-library.com

Ruggles, R. (1998), "The state of the notion: knowledge management in practice", *California Management Review*, Vol 40, No 3, pp. 80-89.

Salisbury, M.W. (2003), "Putting theory into practice to build knowledge management systems", *Journal of Knowledge Management*, Vol 7, No 2, pp. 128-141. Available: http://www.ingenta.com

Salojärvi, S., Furu, P. and Sveiby, K. (2005), "Knowledge management and growth in Finnish SMEs", *Journal of Knowledge Management*, Vol 9, No 2, pp. 103-122. Available: http://www.emeraldinsight.com

Sangeetha, M.A. and Rao, I.K.R. (2000), Evolution of Knowledge Management, *Journal of Knowledge Management*, Vol 37, No 1, pp. 17-32. Available: http://www.emeraldinsight.com

Scarso, E., Bolisani, E. and Padova, A. (2008), "Measuring the Value of KM Projects: Insights into Practical Issues", in Harorimana, D. and Watkins, D. (eds.), *9th European Conference on Knowledge Management*, Academic Publishing Limited, Reading, UK, pp. 785-795. ISBN: 978-1-906638-11-5 CD. Available: http://academic-conferences.org/2-proceedings.htm

Schein, E. (1985), *Organisational cultures and leadership: A dynamic view*, Jossey-Bass, San Francisco.

Schneider, M. (2003), *Knowledge Management Is a Key CRM Driver*, Destination CRM Online, May. Available: http://www.destinationcrm.com [accessed 5th June 2003]

Schön, D.A. (1983), *The reflective practitioner – how professionals think in action*, Basic Books, New York.

Sekaran, U. (2003), *Research Methods for Business: A Skill-Building Approach*, 4th edition, John Wiley & Sons, USA. ISBN: 0-471-20366-1

Senge, P., Kleiner, A., Roberts, C., Ross, R.G. and Smith, B. (1999), *The Dance of Change: The Challenges to Sustaining Momentum in Learning Organizations*, Doubleday Publishing, New York.

Shah, N.A. (2005), *Formulating an E-commerce Strategy for Success*, PhD Thesis, Loughborough University, UK.

Shariq, S. (1997), "Knowledge Management: An Emerging Discipline", *Journal of Knowledge Management*, Vol 1, No 1, pp. 75-82. Available: http://www.ingenta.com

Sharkie, R. (2003), "Knowledge creation and its place in the development of sustainable competitive advantage", *Journal of Knowledge Management*, Vol 7, No 1, pp. 20-31. Available: http://www.ingenta.com

Shaw, D., Hall, M. and Edwards, J.S. (2007), "Responding to crisis through strategic knowledge management", *Journal of Organizational Change Management*, Vol 20, No 4, pp. 559-578. Available: http://www.emeraldinsight.com

Siha, S. (1999), "A classified model for applying the theory of constraints to service organisations", *Managing Service Quality*, Vol 9, No 4, pp. 255-264. Available: http://www.emeraldinsight.com/rpsv/~1178/v9n4/s5/p255

Skyrme, D. and Amidon, D. (1997), "The knowledge agenda", *Journal of Knowledge Management*, Vol 1, No 1, pp. 27-37. Available: http://www.emerald-library.com

Skyrme, D.J. (1997), "Knowledge Management: making sense of an oxymoron", *Knowledge Insights*, No 22, David Skyrme Associates. Available: http://www.skyrme.com/insights/22km.htm

Skyrme, D.J. (2000), "Knowledge Management: Has It Peaked?", *Knowledge Insights*, No 46. Available: http://www.skyrme.com/updates/u46_f1.htm

Skyrme, D.J. (2001), *Disappearing Knowledge: Are Exit Interviews the Wit's End?*, I3 Update / Entovation International News, No 55, November. Available: http://www.skyrme.com/updates/u55_f1.htm [accessed 22nd May 2005]

Skyrme, D.J. and Amidon, D.M. (1998), "New measures of success", *The Journal of Business Strategy*, Vol 19, No 1, pp. 20-24.

Slater, S.F. and Narver, J.C. (1995), "Market orientation and the learning organisation", *Journal of Marketing*, Vol 59, pp. 63-74.

Smith, A.D. and Rupp, W.T. (2003), "Knowledge workers: exploring the link among performance rating, pay and motivational aspects", *Journal of Knowledge Management*, Vol 7, No 1, pp. 107-124. Available: http://www.emeraldinsight.com

Snyman, R. and Kruger, C. (2004), "The interdependency between strategic management and strategic knowledge management", *Journal of Knowledge Management*, Vol 8, No 1, pp. 5-19. Available: http://www.emeraldinsight.com

Soliman, F. and Spooner, K. (2000), "Strategies for implementing knowledge management: role of human resources management", *Journal of Knowledge Management*, Vol 4, No 4, pp. 337-345. Available: http://www.emeraldinsight.com

Spender, J.C. (1996), "Making knowledge the basis of a dynamic theory of the firm", *International Journal of Strategic Management*, Vol 17, pp. 45-62.

Stake, R.E. (2005), "Case studies", in Denzin, N.K. and Lincoln, Y.S. (eds.), *Handbook of Qualitative Research*, 3rd edition, Sage Publications, London.

Stewart, T.A. (1997), *Intellectual Capital: The New Wealth of Organizations*, Nicholas Brealy, London.

Stone, E. (1978), *Research Methods in Organizational Behaviour*, Scott, Foresman and Company, Glenview.

Storey, J. and Barnett, E. (2000), "Knowledge management initiatives: learning from failure", *Journal of Knowledge Management*, Vol 4, No 2, pp. 145-156. Available: http://www.emeraldinsight.com

Strassmann, P.A. (1996), *The value of Computers, Information and Knowledge.* Available: http://www.strassmann.com/pubs/cik/cik-value.shtml [accessed 11th Jan 2004]

Strauss, A. (1987), *Qualitative Analysis for Social Scientists*, Cambridge University Press, Cambridge.

Strauss, A. and Corbin, J. (1990), *Basics of Qualitative Research – Grounded theory procedures and techniques*, Sage Publications, Newbury Park, California

Stringer, E.T. (1996), *Action Research: A Handbook for Practitioners*, Sage publications.

Sturman, A. (1999), "Case Study Methods", in Keeves, J.P. and Lakomski, G. (eds.), *Issues in Educational Research*, Pergamon, pp. 103–112.

Susman, G. and Evered, R. (1978), "An assessment of the scientific merits of action research", *Administrative Science Quarterly*, Vol 23, No 4, pp. 582-603.

Sveiby, K.E. (1998), "Intellectual capital: thinking ahead", *Australian CPA*, Vol 68, No 5, pp. 18–22.

Sveiby, K-E. (2001), "A knowledge-based theory of the firm to guide in strategy formulation", *Journal of Intellectual Capital*, Vol 2, No 4, pp. 344-358. Available: http://www.emerald-library.com/ft

Sveiby, K-E. and Simons, R. (2002), "Collaborative climate and effectiveness of knowledge work - an empirical study", *Journal of Knowledge Management*, Vol 6, No 5, pp. 420-433. Available: http://www.emerald-library.com/1367-3270.htm

Triaster (2004), *Process Navigator*. Available: http://www.triaster.com [accessed 12th Mar 2004]

Trussler, S. (1998), "The rules of the game", *Journal of Business Strategy*, Vol 19, No 1, pp. 16-19. Available: http://www.emeraldinsight.com

Tseng, A-M. (2008), "Knowledge management system performance measure index", *Expert Systems with Applications*, Vol 34, pp. 734-745.

Van Beveren, J. (2002), "A model of knowledge acquisition that refocuses knowledge management", *Journal of Knowledge Management*, Vol 6, No 1, pp. 18-22. Available: http://www.emeraldinsight.com/1367-3270.htm

Vasconcelos, A.C. (2008), "Dilemmas in knowledge management", *Library Management*, Vol 29, No 4/5, pp. 422-443. Available: http://www.emeraldinsight.com

Von Krogh, G., Nonaka, I. and Aben, M. (2001), "Making the Most of Your Company's Knowledge: A Strategic Framework", *Long Range Planning*, Vol 34, pp. 421-439. Available: http://www.lrpjournal.com

Von Krogh, G., Nonaka, I. And Ichijo, K. (1997), "Develop Knowledge Activists!", *European Management Journal*, Vol 5, No 5, pp. 475-483. Available: http://www.ingenta.com

Wagner, W.P., Otto, J. and Chung, Q.B. (2002), "Knowledge acquisition for expert systems in accounting and financial problem domains", *Knowledge-Based Systems*, Vol 15, No 8, pp. 441-442. Available: http://www.elsevier.com/gej-ng/10/30/56/64/57/show/toc.htt

Walsh, J.P. and Ungson, G.R. (1991), "Organisational memory", *Academy of Management Review*, Vol 16, No 1, pp. 57-91.

Walsham, G. (2001), "Knowledge Management: The Benefits and Limitations of Computer Systems", *European Management Journal*, Vol 19, No 6, pp. 599-608. Available: http://www.sciencedirect.com

Wapakabulo-Thomas, J. (2006), *The Adoption and Diffusion of Data-exchange Standards*, PhD Thesis, Loughborough University, UK.

Warburton, N. (1998), *Philosophy: The Classics*, Routledge, Oxford, UK.

Wenger, E. (2000), "Communities of Practice and Social Learning Systems", *Organization*, Vol 7, No 2, pp. 225-246. Available: http://www.ingenta.com

Wickramasinghe, N. (2003), "Do we practice what we preach? Are knowledge management systems in practice truly reflective of knowledge management systems in theory?", *Business Process Management Journal*, Vol 9, No 3, pp. 295-316. Available: www.emeraldinsight.com/1463-7154.htm

Wickramasinghe, N. and Ginzberg, M.J. (2001), "Integrating knowledge workers and the organisation: the role of IT", *International Journal of Health Care Quality Assurance*, Vol 14, No 6, pp. 245-253. Available: http://www.emerald-library.com/ft

Wiig, K.M. (1997), "Knowledge Management: An Introduction and Perspective", *Journal of Knowledge Management*, Vol 1, No 1, September, pp. 6-14. Available: http://www.ingenta.com

Wiig, K.M. (1999), "What future knowledge management users may expect", *Journal of Knowledge Management*, Vol 3, No 2, pp. 155-165. Available: http://www.ingenta.com

Wiig, K.M., De Hoog, R. and Van Der Spek, R. (1997), "Supporting Knowledge Management: A Selection of Methods and Techniques", *Expert Systems with Applications*, Vol 13, No 1, pp. 15-27. Available: http://www.ingenta.com

Wildner, S. (2008), "Problem-Oriented Knowledge Management – Towards a Pattern-based Implementation Approach for KM in SME", in Harorimana, D. and Watkins, D. (eds.), *9th European Conference on Knowledge Management*, Academic Publishing Limited, Reading, UK, pp. 967-975. ISBN: 978-1-906638-11-5 CD. Available: http://academic-conferences.org/2-proceedings.htm

Wilson, T.D. (2002), "The nonsense of 'knowledge management", *Information Research*, Vol 8, No 1, Paper No 144. Available: http://InformationR.net/ir/8-1/paper144.html

Wong, K.Y. (2005), "Critical success factors for implementing knowledge management in small and medium enterprises", *Industrial Management & Data Systems*, Vol 105 No 3, pp. 261-279. Available: http://www.emeraldinsight.com

Wood-Harper, A. (1992), "Viewpoint: Action Research", *Journal of Information Systems*, Vol 2, No1, pp. 23-24.

Yahya, S. and Goh, W.K. (2002), "Managing human resources toward achieving knowledge management", *Journal of Knowledge Management*, Vol 6, No 5, pp. 457-468. Available: http://www.emeraldinsight.com

Yin, R.K. (1994), *Case study research: design and methods*, 2nd edition, Sage publications, Thousand Oaks, London.

Zboralski, K. and Gemünden, H.G. (2006), "The Impact of Communities of Practice", in Coakes, E. and Clarke, S. (eds.), *Encyclopedia of Communities of Practice in Information and Knowledge Management*, Idea Group, Hershey, PA, pp. 218-223.

Zuber-Skerritt, O. (ed.) (1996), *New Directions in Action Research*, Falmer Press, London.

# Appendix A: Samples of outputs of previous knowledge transfer exercises at HSBC (prior to the application of GOKM)

**Sample 1: Josephine – Register Maintenance Manager**

**In doing your current role what are the main issues you need to be aware of?**

- Highly Regulated business. All SLA's, procedures, processes, staff I.e. T&C have to meet regulatory guidelines/rules – FSA closely monitoring our industry.
- Breaches will result if procedures are not followed and timescales not met.
- Maintenance of approximately 1.1 million ISA accounts.
- Use MI to highlight trends in such as complaints/BRIEs and look for preventatives quickly.
- Customer complaints, monetary losses and loss of bank's reputation if errors are made/timescales not met.
- Customer contact by telephone and letter. Must give good service and ensure customers expectations are met.
- Large processing jobs are completed e.g. income runs, direct debit runs – both payment and collection One mistake affects thousands of clients and can risk £m's.
- Staff retention. Fully trained and motivated staff are essential.
- Fraud - internal and external. Full audit controls needed for such as safes, pre-signed cheques, system changes.
- We are the registrars for HSBC unit trusts/OEICs- 4 OEICS – 25 Sub funds- Approx 95,000 accounts.
- Planning for key times e.g. tax year end, client reports, corporate AGM's, OEIC AGM's, OEIC distributions.
- User acceptance testing is carried out fully and competently.
- Inland Revenue reporting needs to be completed accurately and to given deadlines e.g. ESD, S18, S17, S16.

**What are the key knowledge/experience areas required for someone doing your current role?**

- Understanding of regulated processes/procedures.
- Knowledge of systems in use.
- Understanding of legal documents such as power of attorney, GOP, deeds etc.
- Money laundering
- Maintenance of a register - OEICs.
- Data protection,
- What's needed under European Savings directive, S18, S17, S16, SDRT
- How to assess risk.
- Capabilities of GSC, their structure and how they work, monitor process etc
- Distributions process.
- AGM's
- Knowledge of basic products – OEICS/Unit Trusts and PEP/ISAs
- BACS system
- Reports available - what to use and when.
- Ad hoc reports.
- Priorities of work and how to control workflow.
- Knowledge of other areas within business.
- Where to go for answers to non standard issues/queries
- Structure of processing area and key people
- How to manage headcount
- Use of internal departments such as Bootle, CIC
- Launch of new funds
- Wind down of existing funds
- Fund mergers
- Criteria for mailings issued e.g. from CUTAS.
- Audit requirements including State Street
- Use headcount effectively.

- Cross train staff. Do not have teams working in isolation.
- Nominees - large exercise such as transferring shares from/to bulk holding account to/from individually designated accounts. Can run into thousands of transfers. Need to know how to handle.
- Look for efficiencies without compromising on meeting regulations and audit.

**What are the areas that give you most concern in doing your job from day to day?**

- See under all headings above.
- Procedures not being followed.
- Changes made by staff to procedures without knowing or understanding the result/impact.
- Understanding by staff of necessity to complete tasks within regulatory timescales.
- Breakdown in process e.g. rates not received for distribution or other area in HIFA don't complete their step in the chain.
- Spreading resource too thin when being presented with such as new products, tranches etc.
- System failure
- Lack of ownership by key individuals
- Audit checks not being completed.

**Sample 2: Margaret – Reconciliations Manager**

**In doing your current role what are the main issues you need to be aware of?**

- Highly Regulated business. All SLA's, procedures, processes, staff I.e. T&C have to meet regulatory guidelines/rules – FSA closely monitoring our industry.
- All Reconciliations completed within the 10 working day deadline.
- Breaches will result if procedures are not followed and timescales not met.
- Use MI to highlight trends and look for preventative action by section.
- Monetary losses and loss of bank's reputation if errors are made/timescales not met.
- Internal Customer contact by telephone and letter. Must give good service and ensure customers expectations are met.
- Processing of interest allocation –one mistake affects thousands of clients and can risk £m's.
- Staff retention. Fully trained and motivated staff are essential.
- Fraud - internal and external. Full audit controls needed for such as safes, pre-signed cheques, system changes.
- Planning for key times e.g. tax year end, tranche end, maturities, monthly/quarterley reports, distributions.
- User acceptance testing is carried out fully and competently.
- Inland Revenue reporting needs to be completed accurately and to given deadlines e,g
  PEP/ISA 10. PEP/ISA 14, ISA 25.
- Full knowledge of Client Money Regulations.
- Full understanding of Asset Recs and the reason for them.
- Full understanding of how and where to obtain relevant statistics/figures/information from.
- Production of comprehensive MI on a weekly basis

**What are the key knowledge/experience areas required for someone doing your current role?**

- Understanding of regulated processes/procedures.
- Knowledge of systems in use.
- Understanding of legal documents such as power of attorney, GOP, deeds etc.
- Money laundering
- Data protection,
- Full knowledge of PEP/ISA Guidelines
- How to assess risk.
- Capabilities of GSC, their structure and how they work, monitor process etc
- Distributions process and subsequent reconciliation needs.
- Knowledge of basic products – OEICS/Unit Trusts and PEP/ISAs
- Priorities of work and how to control workflow.
- Knowledge of other areas within business.
- Where to go for answers to non standard issues/queries
- Structure of processing area and key people
- How to manage headcount
- Launch of new funds/tranche products and the impact on reconciliations.
- Wind down of existing funds and impact on reconciliations
- Audit requirements including State Street/KPMG/Inland Revenue/Internal
- Use headcount effectively.
- Cross train staff. Do not have teams working in isolation.
- Look for efficiencies without compromising on meeting regulations and audit.
- Establish and develop relationships/contact with relevant key staff.

- Contacts – Chris F. – Finance
- Neil P. – Finance

- Paul P. – Group Banking

**What are the areas that give you most concern in doing your job from day to day?**

- Client Money breaches
- Non-clearance of outstanding reconciliation entries
- Ownership of outstanding reconciliation entries.
- Lack of product knowledge.
- Procedures not being followed.
- Changes made by staff to procedures without knowing or understanding the result/impact.
- Understanding by staff of necessity to complete tasks within regulatory timescales.
- Breakdown in process e.g. rates not received for distribution or other area in HIFA don't complete their step in the chain.
- Spreading resource too thin when being presented with such as new products, tranches etc.
- System failure
- Lack of ownership by key individuals
- Audit checks not being completed.

# Appendix B: Sample of typical questions asked in a Knowledge Transfer Workshops (KTWs) at HSBC

**- adapted from Archibald (2004)**

- Beyond job descriptions, what is "at the heart" of this job?

- What are the pressing issues (e.g. decisions, threats, opportunities, events, etc.), specific to your current job, that need to be resolved urgently?

- Are there any dormant issues (e.g. threats, opportunities) that should be resolved in the long term?

- What is most likely to go wrong and how to you usually respond? Do you have any specific (uncommon) skills you use for complex troubleshooting?

- What mistakes have been made in connection with your project(s) that could be avoided in the future?

- Do you have any unique vendor knowledge / relationships?

- Who are the people that you operationally interact with most frequently and for whom you are the main or only point of contact in your team?

- Who are your key contacts (internal or external) for things like expert advice, decisions, permissions, getting something processed or expedited?

- Can you provide any "inside tips" on preferences/quirks of your key contacts?

- Are there any unexploited ideas or potential improvements/innovations that you would like to mention?

- Do you feel that you've received adequate training and development during the course of performing this role? (Feedback for HR)

- Is there anything else generally of which the successor should be aware?

- Would you be willing to stay in contact for future knowledge exchange?

# Appendix C: Sample Knowledge Harvest Report from HSBC

**Interviewee:** *Tracey,* Leadership Development Programme Manager, HSBC
**Facilitator:** *Peter,* Research Student, Loughborough University
**Knowledge Mediator:** *Steve,* Learning and Development Consultant, HSBC

## Executive Summary

Tracey is a highly regarded expert that has designed and delivered many pioneering training programmes on a global scale. Tracey's move to a new role within the Group has presented a significant problem with finding a suitable successor. The main objectives of this knowledge harvest have been to build a profile of Tracey's job-relevant knowledge, build a list of experience-based hints and tips for the successor and produce a list of additional suggestions that will enhance job performance.

*Leadership Development Programmes Manager* is a challenging role that will require a highly skilled and experienced successor. He/she will have to be able to demonstrate strong project management skills, communicate with employees at various levels of seniority – taking into account business context and cultural influences, promote collaboration with trainers and managers on a global scale, design programmes that can be tailored to local requirements, while ensuring quality is maintained throughout each region, provide many levels of support to trainers and bring together the collective knowledge of trainers and managers, while taking into account management restructurings and changing market conditions.

"Post-impact" evaluation of training programmes, i.e. evaluating the impact of training on day-to-day job performance, has been highlighted as a more accurate method of evaluation that is currently in the early stages of implementation within the Group. It is highly recommended that the successor should promote a full-scale implementation. It is also recommended that ad-hoc "refresher courses" are developed to assist managers with solving "front-line" issues by taking advantage of the knowledge and experience of other managers that have faced similar issues.

So far, all knowledge harvest interviews, within the Group, have been performed at the point of an employee's exit from his/her current role. Although this does add value, it does not fully exploit the benefits of knowledge harvesting. It is recommended that "knowledge workers" should be interviewed at strategically selected time intervals throughout their career with the Group. By following such an approach the Group would be able to improve its succession planning strategy, gain more from an employee's knowledge throughout his/her career and not only on exit from the role and leverage the collective expertise of "knowledge workers" in order to sustain competitive advantage.

## Introduction

This knowledge harvest exercise has been called for as a result of Tracey's move from her role as *Leadership Development Programmes Manager* to a new role within the Group. Tracey is a highly regarded expert in her field and has designed and delivered many pioneering training programmes on a global scale. Her move to a new role has presented a significant problem to the organisation with regards to finding a suitable successor. This knowledge harvest exercise has been commissioned with the purpose of fulfilling three major aims. These are to:

- Build a profile of Tracey's job-relevant knowledge and experience in order to identify a suitable successor with a similar profile.

- Produce a list of Tracey's hints and tips for the successor. These will be based on practical experience of the role and will be in order of importance (i.e. business risk, risk of knowledge loss and impact on job performance).

- Produce a list of additional suggestions for the improvement of policies and processes that may currently provide hindrance to optimum job performance.

This report presents Tracey's job-relevant knowledge profile, experience-based hints and tips for the successor, suggestions for improvement to policies and processes, key contacts that support the development and delivery of training programmes and some further comments and conclusions by Peter Balafas.

## Main responsibilities of Leadership Development Programmes Manager

(in order of importance, i.e. business risk, risk of knowledge loss, job performance)

**1. The remodelling of internal management training programmes is a major global project with design and resourcing challenges across a range of RGTs and businesses.**

**2. To directly manage the development and delivery of a suite of programmes that meet Group- and UK-based business needs.**

**3. Relationship manage the implementation of new programmes across the global community of Group Management Development Trainers.**

**4. To continually reassess the operational risks inherent in the business, taking account of changing economic or market conditions, legal and regulatory requirements, operating procedures and practices, management restructurings, and the impact of new technology.**

**5. To support and participate in the work of other units within Strategic Skills / Leadership Development.**

## Additional responsibilities:

- Mobilise strategy to achieve mindset change to manage for growth.
- Facilitate the continuous development of GMD.
- Chair a global faculty of representatives from the MD community to share best practice, local initiatives and updates.
- Relationship manage a bank of external suppliers.
- Facilitate "train the trainer" events.
- Support local delivery of programmes.
- Provide high quality materials and communications.

## Experience-based Hints and Tips for each area of responsibility

**1. The remodelling of internal management training programmes is a major global project with design and resourcing challenges across a range of RGTs and businesses.**

- Promoting successful collaboration on a global scale is key for keeping training programmes relevant and up-to-date. It is very significant to acknowledge the efforts of all contributors and to keep them involved on a regular basis. This promotes the acceptance of a programme on a global scale rather than the programme being considered as only being relevant to the location where it was designed (e.g. UK). It is a common mistake to send generic updates to all programme contributors. This tends to result in the contributors' diminishing interest in the project over the, often, extended period between designing and delivering a programme. It is therefore recommended that any updates that are sent to contributors are tailored to focus on the most relevant issues and should take into account local business needs and particular cultural factors. This has proven to give a higher response rate from contributors and therefore speeds up project progress.

- When designing or updating a programme that is likely to bring significant change, it is imperative to start communicating as early as possible the intention to change, in order to gain support from the key stakeholders. This will significantly increase the rate at which the changes are accepted and absorbed at each location.

- It is likely that psychometric testing will need to be addressed as part of the remodelling. It is recommended to communicate with local management in order to allow for a suitable tool to be selected and applied. It is important to highlight that a generic solution that is simply translated into the local language is less likely to be successful, because of cultural issues, problems with literal translation, etc. The selection of the psychometric tool should

therefore take into account local objectives, accessibility, cost, design, cultural aspects, etc.

- The main method currently used for programme evaluation is the filling out of an evaluation form by each delegate at the end of a training session. These forms are collected and stored by the local programme director and discussed at global conferences on a casual rather than structured basis. It is recommended that these forms be collected centrally in order to perform a more in-depth analysis of the factors that influence programme success on a global scale. However, this traditional method of evaluating training programmes is considered as being far from optimum. An alternative method that has potential to be more accurate and perhaps less biased is "post-impact" evaluation. Instead of simply filling out a form at the end of a training session, a delegate is queried on the impact of training on his/her day-to-day job performance after an appropriate time interval (e.g. 3 months after receiving the training). The Group is still in the early stages of having a structured method in place to measure training performance in such a way. It is recommended that the successor addresses this matter and takes this method of evaluation forward. This is expected to require a lot of persistence, as it is natural for delegates to want to "get on with their day-to-day work" and not want to respond to such queries. For the wider group implementation of "post-impact" evaluation it is important to take into account several factors, especially cultural aspects, e.g. the perception of managerial grading. A manager who is considered as senior on a local scale is likely to be considered as a middle manager on a group scale. Managerial grading is a sensitive issue and can cause the trainer to be reluctant to chase up the manager for feedback. It is therefore important to develop trainers and relationships in a way that prevents such hindrance. In summary, trainers will need support and encouragement to collect this vital data.

**2. To directly manage the development and delivery of a suite of programmes that meet Group- and UK-based business needs.**

- This aspect of the role requires the successor to demonstrate strong project management skills and self-motivation. There is enough demand in the UK alone for this role to be fully absorbed. However, it is a Group responsibility and therefore the time and resource allocated to each region should be fairly distributed. This will often be a decision of the jobholder, based on analysing the needs of each region. It is worth noting that the UK region has a lot more internal support than some other regions e.g. Brazil. The goal is to allow for any HSBC manager in the world to have access to the same high quality training.

- Although there is a significant amount of design involved in this role, it is equally important to be able to deliver and thus lead by example. In performing a successful delivery to trainers and coaching them on how to best deliver the programme, the programme acquires more credibility because it is seen that the complexities of delivery have been taken into account during the design. It is also important to provide psychological support and coaching to trainers in order to eliminate any doubts of their own ability to deliver the particular training.

- This role will require the jobholder to adapt his/her method of communication, depending on the seniority of the employee and the particular context. For example, promoting a new or significantly updated programme usually requires three stages of communication. First a meeting with the local senior manager, then a meeting with the middle managers and finally a demonstration to programme delegates. Each of these stages will require considerably different methods of communication. In essence, the jobholder must act as a "chameleon".

- During the design/update of a training programme, it is important to take into account local factors, such as objectives, cultural influences etc. Once a training programme has been tailored with and approved by the local managers, it is then imperative to put mechanisms in action to maintain the quality of training. It is not uncommon for local trainers to be delivering only the parts of the programme that they favour, making unauthorised changes to programme layout and photocopying training documents in black & white instead of colour production. All of these contribute to loss in quality of training. It is therefore necessary to monitor and discourage such behaviour. If a local trainer has one or more suggestions for changes to programme design, he/she should submit a proposal with supporting evidence in order for the changes to be approved and managed centrally. This method has a much higher chance of ensuring quality of training while also offering the opportunity for sharing best practice between regions.

- In order to follow the Group's strategy of "managing for growth", the design/update of training programmes will often result in significant changes to working practices. This is likely to be met with quite some resistance by employees. Local trainers would be the first target for encouraging a change of mindset. The trainers would then be expected to promote a change of mindset to the people on the front line. The trainers may also need additional support if they don't have enough background knowledge to facilitate the delivery of a new programme. Knowledge workshops are designed to help trainers to cope with the demands of new programmes by transferring knowledge and recommending additional sources of information. This is especially important for helping the trainers to respond to difficult "non-transcript" questions of delegates. Changing trainers' mindset and running knowledge workshops is a "hidden" responsibility of this role that nevertheless takes up a significant amount of time and effort.

- A new challenge for the role: To design and deliver "refresher courses" in the form of ad-hoc rather than content-driven sessions. These would provide an opportunity for managers that have been in their current role for a significant length of time (e.g. 3-5 years) to receive help on particular issues that they are facing and exchange ideas and solutions with delegates that have dealt with similar problems. The role of the trainer would be to act as facilitator rather than lecturer, in order to bring together the collective knowledge of all the delegates. This knowledge will have originated from the initial training courses and evolved differently through each delegate's experience in the field.

**3. Relationship manage the implementation of new programmes across the global community of Group Management Development Trainers.**

- Organising global conferences is an inherent part of this role. This will require strong administrative, planning and organising skills. It is also a time- and resource-intensive process and will therefore need to be taken into consideration during the project planning stages.

- Managers in developing regions receive less support and have access to fewer resources than those in developed regions. This naturally leads to frustration and hinders performance. It is therefore important to provide managers in developing regions with access to expertise that is not available locally, in order to help them to develop faster and increase their productivity. It is widely accepted that providing such help also adds a lot to the credibility of the central training role.

- Having delivered the training programmes in a variety of organisational settings and cultures across the Group, it is recommended that the successor attempts to bring together the experiences of trainers that deliver similar programmes in different parts of the world. This provides an additional level of insight into the challenges faced and the solutions provided. For example, a trainer

from Hong-Kong visiting Canada to co-deliver a programme with a local trainer ...

**4. To continually reassess the operational risks inherent in the business, taking account of changing economic or market conditions, legal and regulatory requirements, operating procedures and practices, management restructurings, and the impact of new technology.**

- This aspect of the role offers an opportunity for continuous personal development. By observing and analysing the changing economic conditions, management restructurings etc. the jobholder will be able to make more informed decisions on how to best bring together the collective knowledge of trainers, managers and external suppliers. For example, even the sitting arrangements in a meeting/conference can have a significant impact on the efficiency of knowledge exchange and the transfer of knowledge to the most appropriate recipient.

**5. To support and participate in the work of other units within Strategic Skills / Leadership Development.**

- Promoting and facilitating relationships and participating in work with other units has been received well and it is recommended that the successor continues to support this cause by encouraging collaboration with other units within Strategic Skills / Leadership Development. For example, if the executive coaches develop an understanding of what leadership development programmes are available and nurture relationships with the people than run those programmes, they will be better able to recommend programmes for their executives to attend.

## Key Contacts

(that have made significant contributions to the design and delivery of programmes)

### External to HSBC

- *APTER International*: *perform* research in psychometrics, provide psychometric tools, accredit individuals on how to use the tool and process the psychometric profiles that are produced.

- *Pam Tredwin*: contractor, supportive resource, trained to deliver the key leadership development programmes.

- *TOECO*: provide entertainment such as a "rock face" for delegates to climb during corporate events. (This company has been chosen because of their good public liability scheme.)

- *HumourUs*: provide after-dinner motivational speeches.

### Internal to HSBC (UK-based)

- *Lindsey R.*: assists with design of the materials (e.g. producing PDF books and PowerPoint presentations) for training programmes.

- *Mathew S.*: programme delivery manager for UK region - provides the resources for delivery.

### Internal to HSBC (Global)

- *Amy L.* (US)
- *Elly Z.* (Asia/Pacific)
- Lousiana B. (South America)
- Jerry R. & Ashley van R. (United Arab Emirates)
- Corinne B. (France) – especially helpful for French language.

## Additional suggestions for improvement

- It is recommended that the office location for this job role should be moved from Bricket Wood to Canary Wharf. This would enable the successor to work more closely with the rest of the training team, thus facilitating collaboration and increased performance.

- The design and management of a globally accessible database of training programmes would significantly improve awareness of what is available and would also enhance the process of designing/updating programmes to satisfy group and local requirements.

- Giving the successor more access to the senior development training programmes would enable him/her to prepare middle-manager delegates for future senior roles. This would be achieved by increasing their understanding of the senior structure of the organisation and the complexities of key processes and corresponding managerial roles.

## Summary and Conclusions

This knowledge harvest exercise has highlighted that the role of Leadership Development Programme Manager is challenging and will require a highly skilled and experienced successor.

The key success factors that have been identified are:

- Demonstrating strong project management skills
- Adapting method of communication according to business context, employee seniority, cultural factors etc.
- Promoting collaboration with trainers and managers on a global scale in order to create a local sense of ownership of the programmes.
- Designing programmes that are tailored to local requirements such as objectives, cultural influences etc. while ensuring that the quality of training is maintained throughout each region.
- Providing support to trainers, especially in developing regions, by producing high quality training materials, running local knowledge workshops, organising global conferences, demonstrating the delivery of new/updated programmes, advising on how to collect vital performance data from managers and helping to change their own mindset in order to absorb and promote new ways of working.
- Observing management restructurings and changing economic/market conditions in order to make more informed decisions on how to bring together the collective knowledge/experience of trainers and managers.

Additional success factors that should be addressed further by the successor:

- "Post-impact" evaluation of training programmes has been identified as a more accurate and, potentially, less biased method of evaluation. However, the application of the method is in the early stages within the Group and it is highly recommended that the successor should promote a full-scale implementation.

- Ad-hoc "refresher courses" that will assist managers with solving day-to-day issues in their job have been identified as a high-value addition to the Group's training portfolio. The design and implementation of such courses would provide a worthy challenge for the successor.

- Supporting and participating in work with other units in Strategic Skills / Leadership Development has provided benefits to all parties involved and the successor is encouraged to continue the development of relationships that facilitate high-value collaboration.

Through the commissioning of knowledge harvest interviews, the Group is moving towards an improved structure for succession planning. These interviews, facilitated by an expert knowledge analyst, can provide high-value experience-based insight that simply isn't found in standard procedural documents. However, the timing of such interviews is very significant. So far, all interviews have occurred on a person's exit from his/her current role. Although such an interview provides value, there are significant limitations to how much knowledge can be captured if it is only performed at the exit stage. A much more effective method would be to conduct a series of interviews throughout the career of the employee. For example, an interview on entry to the role because of the "fresh eyes" of the new employee, then in strategically selected time intervals as the employee gains experience and finally on exit from the role in order to complete the knowledge harvest. By following such an approach the Group would be able to significantly improve its succession planning strategy, while also gaining - group wide - from the employee's knowledge throughout his/her career with the Group and not

only on exit from the role. It is worth noting that there is a specific target audience to interview, known as "knowledge workers". These employees hold positions where knowledge and experience is key to performance. The most significant products and services of the Group are dependant on employee experience and expertise, which need to be leveraged and protected in order to sustain competitive advantage.

# Appendix D: Sample of recommendations for process & structural improvements from KTWs at HSBC

**- extracted and combined from KTWs with Josephine, Margaret and Catherine**

## Training / Communication

There doesn't seem to be enough contingency planning with training. For example the succession of a person with specialist knowledge needs to be planned well in advance. At present it is more likely that there is going to be a rush to train the successor and this often will compromise the quality of the training provided, leading to a delay in the successor maturing in the role.

Allow more time for training of new staff before getting on to the full time "real" job (e.g. a temp being given a procedure to follow but without having understanding of the context/background → resulting in mistakes being made and when mistakes are made, not knowing how to deal with them).

The induction course is at a good level, but there is no structure/budget for providing continuous training and up-to-date skills. Managing the workload also presents a problem in having the time to be released from day-to-day tasks, in order to go on a training course. But its not additional "formal" training that would be the most useful. Rather, it would be much more useful to have on-the-job and on-demand training because as the level of understanding of the trainee increases over time, so should the level and intensity of training.

Generate more awareness of the whole business process that is performed across departments so that an individual can understand what he/she does and how it impacts on others → resulting in better performance of one's job and improved relationships between departments (e.g. someone from Reconciliations could job shadow a clerk from Settlements for a specific task and then suggest a change in the way that the task is performed that would be of clear benefit to Reconciliations – and this could also be performed in

reverse) → increase of awareness, exchange of suggestions out of which both sides benefit, prompt for direct knowledge sharing.

Although there is clear benefit in conducting knowledge capture interviews when a person is leaving the company, it would be much more useful to perform knowledge capture interviews on a regular basis, throughout a person's career, for the benefit of effective knowledge sharing within and between departments.

Keith is going to be taking over Catherine's position (Regulatory and Operational Support Manager) while she is on maternity leave. Keith currently does a significant amount of high quality Regulatory training that will need to be either continued by someone else or the level of training substantially reduced because there will not be enough time for Keith to carry on performing this task.

**Procedures**

General review / reengineering of processes would bring much benefit because they were defined a long time ago and therefore need to be brought up-to-date.

Procedures that are performed in a fragmented manner, across several geographical locations/departments, are often problematic because of poor communication between the process owners/managers that are working in isolation.

There is a tendency to stop completing a task because of time constraints. Regular management checks should be in force to ensure that procedures are being followed and that there are no gaps.

It is very easy in a processing department when working from images to forget that there is a customer at the end of every piece of work. If there is a delay in dealing with a response to a customer, an acknowledgement must

be sent to the customer with an indication of when they will receive a response.

**Technical**

The application of the knowledge captured in interviews or simply learnt on a day-to-day basis should be submitted to a Knowledge Base that could be accessed by anyone that is seeking to find a solution to a problem (e.g. yesterday someone wanted to know how to use the CODAA system and there were no experts left in the team with that knowledge available). Using this Knowledge Base would be in contrast to the current situation of using a local Excel or Access file that is greatly restricted in scope and application.

Mistakes in processing are currently logged in a database (BRIE) in order to provide a prompt for action, including extra training requirements. There is a target of two weeks for resolving each issue but the current situation is that higher priority tasks are not allowing any time for this to happen. However, it is worth noting that that these problems are most likely a result of the recent restructuring of operations and moving from Sheffield to Leamington. Therefore, it would be fair to assume that they are likely to diminish in time.

There may also be an opportunity to connect BRIE to the new Knowledge Base in order to be able to instantly search for knowledge that helps to deal with an individual processing error that had been logged in BRIE.

There are a number of jobs that need to be automated e.g. OEIC savers commission - currently cheques are handwritten. There has been a good number of IT requests completed and submitted. These need to be reviewed.

**Other Issues**

Dealings / Settlements is a section that should be given priority for support and general improvement.

Unbalanced headcount vs. workload has created the grounds for excessive overtime → employee fatigue + cost implications. (working time directive is often breached)

*Tax year-end*: there is a tendency to focus on new business at the planning meetings. Need to understand that there are many checks and a clean up process for S18. S18 reports to be run, queues to be cleared down. Change of address and deceased queues need to be up-to-date. Timetable needs to be followed. Individuals cannot choose to move tasks to another day without reference to what else will be affected.

# Appendix E: Terms of Reference for the HBOS Group IT Virtual Leadership Team

## 1. OVERVIEW

The Group Functions Customer team was created in 2007 to manage the relationships with the divisions and with the Group Functions customer areas. There are ten customer areas within Group Functions namely Audit, Business Services, Communications, Finance, HR & Pensions, Legal, Payments, Procurement, Property and Risk. The Customer team is a combination of all previous customer facing teams within Group IT (GIT). To build a Virtual team dedicated to each customer area, the GIT functions need to nominate a named person to be aligned to each of the customer areas.

## 2. VIRTUAL LEADERSHIP TEAM KEY ACCOUNTABILITIES

1. Financial Review
    - Review of Operational Report

2. Portfolio Review (active and pipeline)
    - Active Projects – Issues requiring management attention (by exception)
    - 6mnth rolling view of Pipeline (i.e. BIP stage 1, BIP stage 2)
    - Demand and Supply

3. Service Hot Spots
    - Response to recent / active incidents
    - Driving Root cause assessment and remedial actions

4. Review progress against Account Plan
    - Track progress against agreed milestones

5. Assess and manage Operational Risk

6. Med – Long Term Capability Review
    - what skills will the area need in the med-long term?

- Do we have these skills already?
- What actions do we need to put in place to close the gaps?

## 3. MEMBERSHIP

a) The Virtual Team will consist of:

- Group IT Customer Team (Business Systems Managers, Account Managers)
- Application Development and Management (Delivery Centre Manager)
- Service Management Representative
- IT Programmes representative / Delivery Programme Manager
- IT Direction (Portfolio Manager, Architect)

b) In the event that members are unable to attend meetings, suitably empowered alternates will attend on their behalf.

c) The Chair will be a BSM attending on behalf of the Customer Team. The BSM's have overall accountability for the Virtual team.

## 4. FREQUENCY OF MEETINGS

The team will meet monthly or more frequently as required. The Chairman may call additional meetings as necessary. This meeting should take place between working day 10 and 13 of each month. The standing agenda for these meetings to include:

- Financial Review (Monthly)
- Portfolio Review (Monthly)
- Service Review (Monthly)
- Account Plan Review (Monthly)
- Operational Risk Review (Quarterly)
- Capability Review (Half yearly)

## 5. MINUTES

Minutes of the meeting, which must be approved within 5 working days of the meeting by the Chair, are to be circulated to members of the Virtual Leadership team. The minute taker will be assigned prior to the meeting by the Chair.