This item was submitted to Loughborough's Research Repository by the author.
Items in Figshare are protected by copyright, with all rights reserved, unless otherwise indicated.

An evaluation of the influence of experiential marketing on spectators' behaviour in the Taiwanese professional baseball league

PLEASE CITE THE PUBLISHED VERSION

PUBLISHER

© Cheng-Hao Lai

LICENCE

CC BY-NC-ND 4.0

REPOSITORY RECORD

Lai, Cheng-Hao. 2019. “An Evaluation of the Influence of Experiential Marketing on Spectators' Behaviour in the Taiwanese Professional Baseball League”. figshare. https://hdl.handle.net/2134/14896.

Loughborough University

This item was submitted to Loughborough University as a PhD thesis by the author and is made available in the Institutional Repository (https://dspace.lboro.ac.uk/) under the following Creative Commons Licence conditions.

creative commons

COMMONS DEED

Attribution-NonCommercial-NoDerivs 2.5

You are free:

- to copy, distribute, display, and perform the work

Under the following conditions:

Attribution. You must attribute the work in the manner specified by the author or licensor.

Noncommercial. You may not use this work for commercial purposes.

No Derivative Works. You may not alter, transform, or build upon this work.

- For any reuse or distribution, you must make clear to others the license terms of this work.
- Any of these conditions can be waived if you get permission from the copyright holder.

Your fair use and other rights are in no way affected by the above.

This is a human-readable summary of the Legal Code (the full license).

Disclaimer

For the full text of this licence, please go to:
http://creativecommons.org/licenses/by-nc-nd/2.5/

An evaluation of the influence of experiential marketing on spectators' behaviour in the Taiwanese professional baseball league

by

Cheng-Hao, Lai

A Doctoral Thesis

Submitted in partial fulfillment of the requirements

For the award of Doctor of Philosophy of

Loughborough University

July 2014

© **Cheng-Hao Lai 2014**

Abstract

The relationships between service quality, consumer satisfaction, and loyalty have been widely discussed in the service marketing literature, but there is still an ongoing debate about these relationships because they have not been well studied in spectator sport industry (Theodorakis & Alexandris, 2008). Schmitt (2011) claimed that consumer experiential could be a new perspective for evaluating the nature of these relationships. However, experience marketing has some special and unique attributes requiring specific definitions in specific research contexts. Thus, the current research attempts to (1) identify what kinds of experiences are found in Taiwanese professional baseball games; (2) test models of relationships between consumer experience, service quality, satisfaction and loyalty taking into account the unique aspects of the specific context of Taiwanese professional baseball games; and (3) test the role of consumer experience on the relationships between perceived service quality, satisfaction and loyalty.

In order to achieve the research aims, the current research adopted a mixed method approach using both qualitative and quantitative methods. Four focus groups, representing the qualitative stage, were conducted to acquire a better understanding of consumer experience types and characteristics in Taiwanese professional baseball games. The main findings of the focus groups are that (1) ordinary experiences include the game itself while additional events and activities characterise extraordinary experiences. However, (2) when games involve a special performance and record or modifies a ranking position, they can be seen as extraordinary experiences as well. Moreover, ordinary experience and extraordinary experiences also depend on clubs, game days, and stadiums. A questionnaire survey, representing the quantitative stage, was used to investigate the relationships between consume experience, service quality, consumer satisfaction and loyalty. The sampling strategy was designed based on the specific research context features (i.e., different clubs, dates and stadia), and 1,229 questionnaires were collected. A confirmatory factor analysis was conducted in order to test the measurement model and compare theoretical models according to specific research context features. The main findings were that: (1) the degree of association between consumer experience and service quality is significant, (2) both direct and

indirect relationships of consumer experience on consumer satisfaction and loyalty are significant, (3) only an indirect influence, via consumer satisfaction, of service quality on consumer loyalty is significant, (4) the differences of relationships are significant between clubs, but not significant between dates and stadia.

The current research concluded that (1) consumer experience is an important dimension to take into consideration to better understand the formation of consumer loyalty, (2) there is a two-way relationship between service quality and consumer experience, (3) Intangible experience elements are captured by consumer experience while tangible experience elements are captured by service quality, (4) Extraordinary experiences in sport spectating events are highly dependent on situational factors, (5) specific research contexts' features are important to take into consideration when conducting consumer experience research.

Acknowledgements

「What is the difference between a PhD student and a Masters student?」This question was asked by myself when I had just received my Master's degree certificate.「You need a PhD degree, if you would like to work in university.」This comment was made by my supervisor, but I was not really sure about the reason on my first day on the administrative staff of Asia University (Taiwan). Luckily, I learned and found the answer while studying at Loughborough University as a PhD student. I would like to say thank you to my supervisor, Dr. Guillaume Bodet and my former supervisor Prof. Leigh Robinson who has transferred to University of Stirling after my first year. Without their help, I could not have got through this journey. Also, many thanks must go to Prof. Barrie Houlihan, Dr. Paul Downward, Dr. Borja Garcia, and Dr. Nicolas Chanavat for sharing their experiences and providing suggestions to help me to improve my research.

I am grateful to have had Paul, Shane, Karen, In'utu, and Gareth for working and playing hard together in the office ZZ008. I could not have finished this research without many friends' support and help. It is my pleasure to have had encouragement from Dr. Wei-Hwa Pan, Dr. Tzu-Li Liu, and Prof. Chih-Chiang Chung, and Prof. Ming Rong Li. Special thanks is also due for the help and assistance from my colleagues: Kevin Chang, Ken Hsu, and Man-Yuan Tseng, Freda Wu; my lovely students: Mars Chen, Johnny Shiu, Yi-Jing Lin, Fang-Yu Shih, Candy Yang, and La-La Hong; and my best friends James Wu, Celina Chen, Tony Lai, Linda Wu, Carol Chen, Ashia Hsu, Judy Tseng, Judy Shih, and Maggie Lai. Finally, I appreciate that my family understand why I have had to spend six years studying for a PhD degree and always give me a support. My journey of studying in the UK is nearly finished. However, this is not the end of my research. It has only just begun, and I have to keep fighting in the academic field. I will try everything I can to do the best for my research career. Once again, thank you all for your support and help while I have been doing this research.

Contents

Abstract ..... **i**

Acknowledgements ..... **iii**

Contents ..... **iv**

Table Contents ..... **vi**

Figure Contents ..... **x**

CHAPTER 1: Introduction **1**

1.1 Research Background 1

1.2 Research Aims and Objectives 4

1.3 Research Questions 9

1.4 Thesis structure 10

CHAPTER 2: Literature review **11**

2.1 Introduction 11

2.2 Consumer Loyalty 11

2.3 Consumer Satisfaction 15

2.4 The relationship between Consumer Satisfaction and Loyalty 19

2.5 Service Quality 20

2.6 The relationships between Service Quality, Consumer Satisfaction and Loyalty 24

2.7 Consumer Experience 26

2.8 The relationships between consumer experience and other research constructs 45

2.9 The current research model 51

CHAPTER 3: Research Methodology and Methods **54**

3.1 Introduction 54

3.2 Ontological assumption: Depth realist 56

3.3 Epistemological assumption: Neo-realism 58

3.4 Research Paradigms: Critical realism 59

3.5 Research Strategies: Retroductive strategy 64

3.6 Research Method and sources: Mixed Method 66

CHAPTER 4: Qualitative Approach 69

4.1 Introduction 69

4.2 Background of CPBL 70

4.3 Qualitative research method: the focus groups 83

4.4 Summary 93

CHAPTER 5: Quantitative Approach 95

5.1 Introduction 95

5.2 The research instrument: Questionnaire 95

5.3 Sampling 118

CHAPTER 6: Data analysis 126

6.1 Introduction 126

6.2 Inferential Statistics 127

6.3 Path analysis with latent variables 132

CHAPTER 7: Discussion and implications 189

7.1 Introduction 189

7.2 Discussion 189

7.3 Theoretical and managerial implications 221

7.4 Limitations and directions for further research 230

References 236

Appendix 1 282

Appendix 2 283

Appendix 3 296

Appendix 4 300

Appendix 5 304

Table Contents

Table 1: Traditional Marketing *versus* Experiential Marketing 41

Table 2: Area of study based on the ontologies and domains of critical realism 57

Table 3: The meta-theoretical assumptions of Positivism, Realism and Interpretivism 62

Table 4: The logic of retroductive strategy 65

Table 5: Basic information of the CPBL and its clubs 72

Table 6: Events which are provided by Brother Elephants 75

Table 7: Events which are provided by Sinon Bulls 77

Table 8: Events which are provided by Uni-President 7-Eleven Lions 79

Table 9: Events which are provided by Lamigo Monkeys 81

Table 10: Main questions for focus group 89

Table 11: The items measuring consumer experience 100

Table 12: The scale measuring consumer experience in the current research 102

Table 13: Item-Total Statistics of Sense dimension 304

Table 14: Item-Total Statistics of Relate dimension 304

Table 15: Item-Total Statistics Emotion dimension 304

Table 16: Item-Total Statistics of Think dimension 305

Table 17: Item-Total Statistics of Immersion dimension 305

Table 18: Item-Total Statistics of Consumer Experience scale 305

Table 19: Item Analysis of the Consumer Experience scale 104

Table 20: Rotated Component Matrix [a] of Consumer Experience scale 105

Table 21: Scale of service quality of the current research 106

Table 22: Item-Total Statistics of Service Quality sclae 306

Table 23: Item Analysis of the Service Quality scale 108

Table 24: Item Analysis of the modified Consumer Experience scale 109

Table 25: The Rotated Component Matrix [a] of the modified Consumer Experience scale 110

Table 26: The scale of Consumer Satisfaction of the current research 111

Table 27: Item-Total Statistics of Transaction-specific satisfaction dimension 307

Table 28: Item-Total Statistics of Overall satisfaction dimension 307
Table 29: Item-Total Statistics of Consumer satisfaction scale.....307
Table 30: The Item Analysis of Consumer Satisfaction scale 112
Table 31: The Rotated Component Matrix of the Consumer Satisfaction scale 113
Table 32: The scale of Consumer Loyalty of the current research.....114
Table 33: Item-Total Statistics of Attitudinal loyalty dimension 308
Table 34: Item-Total Statistics of Behavioural loyalty dimension.....308
Table 35: Item-Total Statistics of Consumer loyalty scale.....308
Table 36: The Item Analysis of the Consumer Loyalty scale 115
Table 37: The Rotated Component Matrix of the Consumer Loyalty scale.....115
Table 38: The Demographic and Behavioural Questions.....117
Table 39: The sampling strategy 122
Table 40: The final sample breakdown 123
Table 41: Summary of descriptive statistics for metric variables 124
Table 42: Summary of descriptive statistics for nominal and ordinal variables 124
Table 43: The current research's hypotheses.....127
Table 44: The CFA assessment indexes 134
Table 45: Modified Scale of consumer experience of the current research 134
Table 46: The CFA assessment of the SENSE dimension 135
Table 47: The CFA assessment of the RELATE dimension.....136
Table 48: The CFA assessment of the EMOTION dimension 137
Table 49: The CFA assessment of the THINK dimension 137
Table 50: The CFA assessment of the IMMERSION dimension.....138
Table 51: The service quality scale of the current research 139
Table 52: The CFA assessment of the Service Quality dimension.....140
Table 53: The CFA assessment of Service Quality dimension (Revised) 140
Table 54: The CFA assessment of the Transaction-specific (Today) Satisfaction dimension.....141
Table 55: The CFA assessment of the Overall Satisfaction dimension.....142

Table 56: The CFA assessment of the Attitudinal loyalty dimension 143
Table 57: The CFA assessment of the Behavioural dimension 144
Table 58: The second order CFA assessment of the Consumer Experience construct.....148
Table 59: The second order CFA assessment of Consumer Satisfaction construct.....151
Table 60: The second order CFA assessment of Consumer loyalty construct 151
Table 61: The model assessment of the Bollen two steps factor analysis.....153
Table 62: Multi-collinearity assessment.....153
Table 63: The CFA assessment of the Service Quality factor (Revised).....154
Table 64: The model assessment of the Bollen two steps factor analysis (Revised) 154
Table 65: Multi-collinearity assessment (Revised) 155
Table 66: Summary of the multivariate normality analysis 321
Table 67: Summary of the multivariate normality analysis (bootstrap method).....160
Table 68: Assessment of the common method variance (CMV).....162
Table 69: Criteria of individual item and construct reliability.....166
Table 70: Assessments of individual item and construct reliability.....322
Table 71: Criteria of convergent and discriminant validity.....169
Table 72: Assessments of Convergent validity 323
Table 73: Discriminant validity (Compared AVE method).....169
Table 74: Discriminate validity (Bias-corrected accelerated method).....324
Table 75: Discriminate validity (SEM standardized correlation method) 324
Table 76: Discriminate validity (Compared AIC and ECVI method).....324
Table 77: Significant parameter estimates 170
Table 78: Items of SEM basic fitness and standard 171
Table 79: Items of SEM internal fitness and standard 172
Table 80: Assessment of offending estimates 326
Table 81: The GOF model assessments criteria.....178
Table 82: GOF assessment after the Bollen-Stine bootstrap p-value correction 179
Table 83: Direct, indirect, and total effect between variables.....182

Table 84: Cross-validity of the model 183

Table 85: Mmulti-group comparison (Ordinary & extraordinary clubs) 327

Table 86: Mmulti-group comparison (Weekday & Weekend) 327

Table 87: Mmulti-group comparison (Different club in different stadium).....328

Table 88: Mmulti-group comparison (Club of Bull, different stadium) 328

Table 89: Mmulti-group comparison (Club of Elephant, different stadium) 328

Table 90: The results of hypothesis tests.....220

Figure Contents

Figure 1: The relationships between consumer satisfaction, and loyalty.....20

Figure 2: The relationships between service quality, consumer satisfaction, and loyalty 26

Figure 3: A framework of consumer experience 32

Figure 4: An ideological way of conducting experiential marketing.....44

Figure 5: The relationships between consumer experience, satisfactions, and loyalty.....48

Figure 6: The link consumer experience, and service quality.....50

Figure 7: The research model.....53

Figure 8: The interrelationship between the building blocks of research 55

Figure 9: Ordinary and extraordinary experiences in CPBL 93

Figure 10: Standard operating procedure of analysing SEM 133

Figure 11 The CFA model of SENSE dimension.....309

Figure 12: The CFA model of RELATE dimension 309

Figure 13: The CFA model of EMOTION dimension 310

Figure 14: The CFA model of THINK dimension 310

Figure 15: The CFA model of IMMERSIOM dimension 311

Figure 16: The CFA model of Service Quality dimension.....311

Figure 17: The CFA model of Service Quality dimension (Revised) 312

Figure 18: The CFA model of Today Satisfaction (transaction-specific) dimension.....312

Figure 19: The CFA model of Overall Satisfaction dimension.....313

Figure 20: The CFA model of Attitudinal Loyalty dimension 313

Figure 21: The CFA model of Behavioural Intention Loyalty dimension 314

Figure 22: 1st order CFA of Consumer Experience in single dimension.....145

Figure 23: 1st order CFA of Consumer Experience in 5 dimensions (without correlation) 146

Figure 24: 1st order CFA of Consumer Experience in 5 dimensions (with correlation) 147

Figure 25: 2nd order CFA of Consumer Experience 148

Figure 26: 1st order CFA of Consumer Satisfaction in single dimension.....314

Figure 27: 1st order CFA of Consumer Satisfaction in 2 dimensions (without correlation) 315

Figure 28: 1st order CFA of Consumer Satisfaction in 5 dimensions (with correlation).....315
Figure 29: 2nd order CFA of Consumer Satisfaction 150
Figure 30: 1st order CFA of Consumer Loyalty in single dimension 316
Figure 31: 1st order CFA of Consumer Loyalty in 2 dimensions (without correlation).....316
Figure 32: 1st order CFA of Consumer Loyalty in 2 dimensions (with correlation) 317
Figure 33: 2nd order CFA of Consumer Loyalty.....151
Figure 34: Assessment of multi-collinearity 318
Figure 35: Bollen two steps factor analysis (SEM model) 319
Figure 36: The CFA model of Service Quality dimension (Revised) 320
Figure 37: Assessment of multi-collinearity (Revised).....156
Figure 38: The Bollen two steps factor analysis (SEM model) (Revised).....157
Figure 39: Single factor CFA model of the common method variance (CMV).....163
Figure 40: Multi-factor CFA model of the common method variance (CMV).....164
Figure 41: Bollen-Stine Bootstrap distributions 325
Figure 42: The result of path analysis (PA-LA).....182
Figure 43: Model comparisons of Ordinary/Extraordinary experiences clubs 186
Figure 44: Model comparisons of the Elephants/Bulls and Lions/Monkey (stadium) 187
Figure 45: Model comparisons of stadium 1/stadium 2.....188
Figure 46: Assessment of model testing.....203
Figure 47: The model comparison (ordinary and extraordinary clubs) 213
Figure 48: The model comparison (Different clubs within different stadia) 216
Figure 49: The model comparison (The same clubs within different stadium) 218

CHAPTER 1: Introduction

1.1 Research Background

In Taiwan, the professional sport organisation which has the longest development history is the Chinese Professional Baseball League (hereafter referred to as CPBL). The development of the CPBL faced three major crises. The first of these followed the infamous game-fixing and gambling scandals at the end of 1996 (Kuo, et al., 2004). Wang, et al. (2011) summarised that apart from the influence of game-fixing and gambling, the development of the CPBL has also suffered from the presence of other competitions, both locally (i.e., another professional baseball league: Taiwan Major League, TML) from 1977 to 2002, and internationally (for example: Major League Baseball, hereafter referred to as MLB; Nippon Professional Baseball, hereafter referred to as NPB). These authors also noticed that a unique feature of the CPBL is the absence of a local fan base, as most clubs in the league do not really represent particular cities or regions. All clubs arrange games around major cities in Taiwan. Thus, the concept of regional identification is not significantly apparent in the league and regional loyalty is not as strong as in other professional baseball leagues around the world. Studies from Chung (1992), Fun (1994), Lin (1995), Wu (2002), Hung (2003), Li (2004) and Chen and Chien (2005) claimed that there is another significant problem for the league and clubs which is the need for spectators to express decent satisfaction levels from their experiences at games, which in turn influences their loyalty and repurchase patterns. In other words, most spectators have had more or less dissatisfactory experiences with CPBL over the last 21 seasons.

Wang, et al. (2011) stated that improving consumer satisfaction in order to reach a high level of spectator loyalty should be one of the most important objectives for CPBL and its clubs. Attracting more spectators is a fundamental strategy for the league and clubs to deal with

dissatisfaction and insufficient loyalty. Providing good service quality to spectators is the first step to reduce dissatisfaction and an ideal way to keep existing spectators. Attracting more spectators should be considered as another important objective by the league and clubs due to the small population and geographical size of Taiwan. Hunt, et al. (1999) believed that league and clubs have to make a concerted effort on marketing strategy in order to keep or increase a significant portion of the spectators. Therefore, all clubs in the CPBL need to cooperate with the league and implement an effective marketing approach in order to satisfy and attract more spectators. The issue of how to effectively improve consumer satisfaction in order to reduce the possibility of dissatisfactory experiences perceived by spectators and win their supports back is vital.

According to Theodorakis and Alexandris (2008), the relationship between consumer satisfaction and consumer loyalty has been widely discussed and studied in the service marketing literature (e.g. Athanassopoulos, et al., 2001; Dagger, et al., 2007). Although this relationship could also be considered in the CPBL with spectator loyalty being primarily driven by perceived service quality and spectator satisfaction (e.g., Chung, 1992; Yang, 2006; Wang, et al., 2011), there has been an extensive debate about the relationship in sport industries (e.g., Bodet, 2008; Ferrand, et al., 2010) and other service industries (e.g., Chen, 2008; Chen & Tsai, 2007; Choi & Chu, 2001), as the relationships between service quality, consumer satisfaction and loyalty are not always significant. Tsai and Chen (2011) indicated that the reason why the relationships are not always found to be significant (e.g., banking, food or education industry) is because the satisfaction-loyalty-profit chain assumes that all consumers behave rationally during their consumption. In fact, consumers do not always act rationally. For example, sport marketers are not able to control the outcome of the games as the core product of sport is not manageable. Spectators at sport events may change their behaviour because of emotional dimensions such as happiness, aesthetics, and surprise, among other. Hence, if consumer satisfaction is only assessed by service quality, especially in spectator sport industry, it will not be enough to predict

consumer loyalty.

From the marketing point of view, Holbrook and Hirschman (1982) were the first scholars to introduce the concept of experience into academic research on business. This inspired more followers to study this topic and reinforced the need for marketers to consider the concept of experience into their marketing plans. Schmitt (1999, 2003, & 2011) claimed that traditional marketing does not really focus on the consumer but is mainly based on the features and functions of products or services. This author advocated that experience marketing, which focuses on consumer experience as the core value of marketing strategy, might be an ideal solution to better understand the relationship between consumer satisfaction and loyalty. This approach can fulfill consumers' expectations more easily by creating holistic experiences in order to achieve a higher rate of consumer loyalty. The approach also emphasises the long-term relationship and the emotional aspects which acknowledge that consumers are both rational (considering features and function of products or services) and emotional (e.g., sensory, aesthetics dimensions). This is the main reason why Schmitt and Rogers (2008), and Skard, Nysveen and Pedersen (2011) believe that consumer satisfaction cannot always predict consumer loyalty via the traditional marketing approach. Moreover, Bauer, et al., (2005) confirmed Gladden and Milne's (1999) conclusion that branding is a key success factor for professional sport clubs. Brand equity has a positive effect on attendance, purchase intention, brand loyalty and price premiums. As Keller (1993, 2003) described, brand equity can be seen as the effect of brand knowledge on consumer reaction to the marketing of the brand. Brand knowledge includes consumer experience which provides a deeper understanding of how consumers feel, think and act so as to address the challenges of brand management. Brand management is not only concerned with bringing economic success for clubs, but also helps club marketers to conduct different marketing approaches (e.g., experiential marketing). Therefore, if CPBL clubs want to conduct a successful marketing approach in order to build a strong brand to increase attendances, purchase intention, and consumer loyalty, the first issue to discuss is the possibility of applying

experiential marketing approach in the sport spectating industry. Although the importance of experience has been noted in academic business research, and there are some successful examples of service providers using the experiential marketing approach (e.g., airline, coffee shop & fast food industries), the contention remains that more empirical work is needed in a variety of industries to prove its impact on consumer behaviour in general and satisfaction and loyalty in particular (Schmitt, 2003). Tynan and Mckechnie (2009), and Garg, et al. (2011) have also claimed that there is a lack of evidence for the application and the evaluation of the experiential marketing approach in the sports spectating industry. The main question of the current research is to answer: ***Can experiential marketing positively influence consumer satisfaction and loyalty in Taiwanese professional baseball games?***

1.2 Research Aims and Objectives

As discussed in the previous section, the potentialities of experiential marketing have been widely discussed in different industries and have been found to be useful ways of improving the relationship between consumer satisfaction and loyalty. However, there remains a lack of empirical support for this, and specifically so in relation to sport spectating events. O'Sullivan & Spangler (1998) and Lundberg (2007) explained that sport spectating events are part of the entertainment industry. However, experiences are not homogenous according to contexts, and this concept bears some special and unique characteristics in the sport spectating one. Therefore, there is a need for a clear definition of what specific experiences are in sport spectating events, representing the foundation for implementing experiential marketing approaches. The current research therefore aims to discover the specific meanings associated wieh consumer experiences in the CPBL and to investigate the effects of various consumer experiences on the relationships between service quality, consumer satisfaction, and loyalty in order to highlight the outcomes of

the application of experiential marketing strategies. The first set of aim and objectives of the current research are:

(1) Aim: ***to identify what consumer experiences are in Taiwanese professional baseball games***

According to Holbrook and Hirschman (1982) and Schmitt (1999, 2003), consumers also look for pleasure, feelings and fun from products or service providers during their consumption. This is particularly the case for sport spectating events - which are considered to be part of the entertainment industries (O'Sullivan & Spangler, 1998; Lundberg, 2007). Standeven and De Knopp (1999) described that to attract and retain spectators, marketers should try to create memorable experiences, because some spectators may be motivated to attend sport events by desires for entertainment and spectacle, emotional stimulations, curiosities or social outings (Getz, 2008; Kruger & Saayman, 2012). It is clear that some spectators go to stadia for live games not only for game itself (core products or services), but also for something different, an extraordinary experience. However, the main characteristics of experiences are internal, mental, subjective, personal, singular, and not universal. They are strongly influenced by multidimensional constructs which come from different types of individual responses (Carù & Cova, 2003, Skard, et al., 2011). Therefore, there is an essential question to ask: What is the meaning of consumer experiences in professional baseball games in Taiwan? On one hand, the current research has to find out the answer to this before testing the capacity of consumer experiences in influencing consumer satisfaction and loyalty. On the other hand, club marketers have to know what kinds of specific contexts of experiences can be found in Taiwanese professional baseball games in order to map out the most exciting consumer experiences and set up a complete experience environment.

(A) Objective: ***to identify what ordinary and extraordinary consumer experiences are in Taiwanese professional baseball games***.

The current research reviews the main discussions about the concept of experience from the

literature and which have expressed different points of view (e.g., Carù, & Cova, 2003; Montonen & Tanski, 2004) so as to generate a definition in the marketing and management field. The current research also seeks to discover what consumer experiences are in Taiwanese professional sport games. As Carù and Cova (2003), Abrahams (1986) and Arnould and Price (1993) highlighted, consumer experiences should be split into two categories: the ordinary and the extraordinary experiences. The word "extraordinary" refers to something out of the ordinary, something which is not expected. Marketers have to create more emotional dimensions (e.g., surprise or memorable), in order to provide maximum opportunity for extraordinary experiences to be felt by consumers. Hence, offering extraordinary experiences represents the main strategy of the experiential marketing approach. The first objective of the current research is therefore to focus on identifying what can be considered as ordinary and extraordinary consumer experiences in the Taiwanese professional baseball games.

(B) Objective: ***to discover the specific contexts influencing consumer experiences in Taiwanese professional baseball games.***

Walls, et al. (2011) described that a complete consumer experience includes external (peripheral) and internal (core) elements. One important characteristic of internal consumer experience includes some unique, subjective, internal, or mental perceptions (Carù & Cova, 2003:269; Skard, et al., 2011). However, these perceptions can be slightly or strongly influenced by other external factors (e.g., situational factors, physical experience elements) so as to make each consumer experience unique. Therefore, the current research also tries to discover specific external factors and contexts in which ordinary and extraordinary consumer experiences are produced in Taiwanese professional baseball games.

After providing a specific definition and identifying the specific contexts of experiences in the Taiwanese professional baseball games, the second aim of the current research is to answer the main research question: ***Can experiential marketing positively influence consumer***

satisfaction and loyalty in Taiwanese professional baseball games? The answer to this question will address the impact of experiential marketing and help to discover if experiential dimensions significantly and positively influence consumer satisfaction and loyalty in sport spectating events and especially in the CPBL which aims to maximise the level of spectator satisfaction and loyalty. Thus, the second set of aim and objectives of the current research is:

(2) Aim: ***to test the role of consumer experience in the relationship between service quality, consumer satisfaction, and loyalty in the Taiwanese professional baseball games.***

The current research study tries to conduct an empirical work which develops and examines a model supported by various scholars (e.g., Schmitt, 2003; Gibson, 2005; Vanhamme, 2008; Brakus, et al., 2009; Smilansky, 2009; Wu & Liang, 2009) about the influence of consumer experience on consumer satisfaction and loyalty. The findings will help the current research to address the influence of experiential marketing in sport spectating industries in terms of consumer satisfaction and loyalty.

(C) Objective: ***to investigate the relationships (model) between consumer experience, service quality, consumer satisfaction and loyalty in the Taiwanese professional baseball games.***

The relationship (model) between consumer satisfaction and loyalty has been debated for a long time. Some research (e.g., Gilly, 1987; Reynolds & Arnold, 2000; Gerpott, et al., 2001) has shown that there is a positive relationship between satisfaction and loyalty when consumers have higher levels of satisfaction, as they are more likely to remain loyal. Nevertheless, consumer satisfaction cannot always predict consumer loyalty (Koenig-Lewis & Palmer, 2008; De Rojas & Camarero, 2008; Bodet, 2008; Ferrand et al., 2010). Even if consumers are satisfied, it is not guaranteed that they will remain loyal. From some scholars' point of view (e.g., Schmitt, 1999; Smilansky, 2009), the reason why the relationship between consumer satisfaction and loyalty is not systematically positive and significant is because the

emotional dimensions are not always taken into consideration. Consumer experiences could be a useful dimension to assess whether consumer satisfaction can predict consumer loyalty for certain types of experiences. In light of this, the current research attempts to understand the role of consumer experiences in the relationship (model) which uses consumer experience and service quality as two factors which influence consumer satisfaction and loyalty in Taiwanese professional baseball games.

(D) Objective***: to reassess the relationship between consumer satisfaction and loyalty in Taiwanese professional baseball games.***

There is an extensive debate about the relationship between consumer satisfaction and loyalty in service industries (e.g., Chen, 2008; Chen & Tsai, 2007; Choi & Chu, 2001). The relationships cannot be ascertained and remain unclear in the sport spectating literature (Bodet, 2008; Ferrand, et al., 2010; Theodorakis, et al., 2013). Although the CPBL literature estimates that spectator loyalty is primarily driven by spectator satisfaction (e.g., Chung, 1992; Yang, 2006; Wang, et al., 2011), the current research tries to reassess the relationship by considering consumer experiences and service quality as two antecedent variables. The reassessment is able to distinguish how consumer experience's importance to the relationship should be attached.

(E) Objective: ***To test the existence of model differences according to demographic and behavioural characteristics and the specific contexts of Taiwanese professional baseball games which are acquired from spectators' point of view.***

After the model has been identified, the current research considers the point of view which is advocated by Shaw (2007), Van Doorm (2006), and Heinonen, et al. (2010) that consumer experience is an interaction between product or service providers and their consumers in terms. Therefore, consumer characteristics (i.e., the demographic and behavioural characteristics) are taken into consideration to determine whether these alter the

model, the intensity, and/or the nature of certain of its relationships. In line with this approach, the product or service providers' characteristics should be also considered. Thus, the specific contexts of Taiwanese professional baseball games influencing the production of ordinary and extraordinary experiences in Taiwanese professional baseball games are also investigated in terms of impact on the theoretical model. The results can provide comparative knowledge which addresses the possibility of using experiential marketing in certain situations and under certain conditions as the main marketing strategy to improve consumer satisfaction and loyalty in Taiwanese professional baseball.

1.3 Research Questions

Following the presentation of the research background, aims, and objectives, the main question of the research is: ***Can experiential marketing positively influence consumer satisfaction and loyalty in Taiwanese professional baseball games?*** There are more subordinate questions which are also considered by the current research:

(1) What kind of experiences can be classified as ordinary or extraordinary experiences in Taiwanese professional baseball games? (Objective A)

(2) What are the specific contexts conditioning ordinary and extraordinary experience in Taiwanese professional baseball games? (Objective B)

(3) Can consumer experience positively influence consumer satisfaction and loyalty in Taiwanese professional baseball games? (Objective C)

(4) Can consumer satisfaction positively predict consumer loyalty in Taiwanese professional baseball games? (Objective D)

(5) Can experiential marketing be considered a useful marketing strategy to improve consumer satisfaction and loyalty? (Objective E)

1.4 Thesis structure

The thesis is organised into seven chapters. The first chapter is the introduction and identifies the fundamental theoretical concepts of the current research. This chapter includes the research background, aims, objectives, and questions. Chapter two is the literature review. The main purpose of this is to discuss the relevant literature regarding the relationships between variables in the current research which include consumer experience, service quality, consumer satisfaction, and consumer loyalty. Moreover, the concepts and primary notions for each variable are also discussed in this chapter. The purpose of chapter three is to outline the methodology and methods of the current research. Two sections structure the third chapter: first, the methodology presents the philosophical positions is taken by the research, and which research strategies and paradigms are considered and which research approach. Following this, chapter four presents the background of the CPBL, and discusses the qualitative approach of the current research. This approach was conducted by using focus groups in order to fulfill the first set of research aims and objectives. The fifth chapter describes the quantitative approach of the current research, which presents how the survey is conducted in order to deal with the second set of aim and objectives. Chapter six presents the analysis and the results of the quantitative approach, which contains the analysis of demographic and behavioural variables, the exploratory factor analysis (inferential analysis) and the confirmatory factor analysis (path analysis). Finally, chapter seven comprises the discussion and conclusion of the current research, presenting the main findings, limitations, and further research directions.

CHAPTER 2: Literature review

2.1 Introduction

Chapter two reviews the literature which is relevant to the topic of the current research. The main objective of the chapter is to review the current literature in order to gain a better understanding of relevant research concepts and also to try to find a gap in it and which requires further research. Meanwhile, the review also links theories in relation to the current research and the research aims and objectives so as to set a series of hypotheses. The literature review is structured in eight sections, namely: consumer loyalty, consumer satisfaction, the relationships between consumer satisfaction and loyalty, service quality, the relationships between service quality, consumer satisfaction, and loyalty, consumer experience, the relationships between consumer experience and other research constructs, and the conceptual research model.

2.2 Consumer Loyalty

This section provides a discussion of consumer loyalty and is made of three parts: definitions of consumer loyalty, consumer loyalty in sport spectating events, and a summary of this section.

2.2.1 The definitions of Consumer Loyalty

Consumer loyalty is an important construct when conducting any research focused on consumer behaviour (Lee, et al., 2007; Wang, et al., 2011). However, definitions of consumer loyalty are diverse. Dick and Basu (1994) described that consumer loyalty can be seen as a relationship between an individual's relative attitude and repeat patronage. It can be influenced by social norms and situational factors. Oliver (1999:34) described that consumer loyalty is "*a deeply held commitment to re-buy or re-patronize a preferred product/service consistently in the*

future, thereby causing repetitive same-brand or same brand-set purchasing, depite situaional influences and marketing efforts having the potential to cause switching behaviour". It can be seen as a deeply held commitment to repurchase a product or service regularly. Tsoukatos and Rand (2006) described that consumer loyalty can be seen as a linkage between consumers and providers which means that consumers would like to keep the relationship with the current service or product provider as they believe this is better than others. The definition given by Oliver is has been widely adopted by other scholars (e.g., Pont, & McQuilken, 2005; Walsh, et al., 2008; Lenka, et al., 2009). Moreover, Zemke's (1992) and Lee, et al. (2005) claimed that consumer loyalty can be seen as a high consumer commitment status of continued repurchasing, when the consumers perceive good consumption experiences. This definition highlights the link between the concepts of consumption experience and commitment to repurchase. The current research adopts the definitions which are made by Oliver (1999), Zemke (1992), and Lee et al. (2005) that consumer loyalty is a commitment towards consistently repurchasing a preferred product or service.

Many scholars (e.g., Jacoby & Kyner, 1973; Dick & Basu, 1994; Oliver, 1997; Gladden & Funk, 2001; Tsoukatos & Rand, 2006; Walsh, et al., 2008; Bodet, 2008; Wang, et al., 2011) have proposed that two types of customer loyalty can be identified. These are attitudinal and behavioural loyalty. Behavioural loyalty refers to the repeated consumption of the same product or service. There are two types of behavioural loyalty. *Actual behavioural loyalty* focuses on the actual behaviour of loyalty. *Intention-based behavioural loyalty* is the second type which is based on the consumers' intention of repeating consumptions. Bansal and Taylor (1999) indicated that it is not only about consumers' continuing purchase from the same product or service provider, but also increasing the relationship with the same provider. Thus, Bansal and Taylor claimed that the intention-based behavioural loyalty is close to attitudinal loyalty (another type of loyalty) in which loyalty is focused on "the possibility of consumer intents to repurchase" rather than "what consumer actual behaviour is". The other type is *attitudinal loyalty*. This kind

of loyalty is about consumers' attachment to a product, service, or organisation which is created by different feelings (Fornier, 1994). For instance, word-of-mouth (hereafter referred to as WOM) is a common ambit to consumers who are willing to recommend the service or product provider to other consumers (Hallowell, 1996; Ranaweera & Prabhu, 2003). Attitudinal loyalty is the original causes of the actual repurchase behaviour. From another perspective, Liu and Wu (2007) and Ferrand, et al. (2010) claimed that consumer loyalty is a multi-faceted behavioural construct. Zins (2001), Bowen and Chen (2001), Pantouvakis and Lymperopoulos (2008) claimed that combining attitudinal and behavioural loyalty is the third type of loyalty which is called *composite loyalty*. For example, Homburg and Giering (1999) highlighted that behavioural loyalty represents past purchasing behaviour and past positive WOM. Thus, consumer retention (actual actions) also includes positive-WOM and cross-buying behaviour. In other words, a complete understanding of the concept of consumer loyalty should embrace each of these two dimensions (Backman & Crompton, 1991).

Jacoby and Chestunt (1978), Oliver (1999), and Wang, et al. (2011) claimed that it is easier to examine consumer loyalty by studying actual behaviour (consumer retention) dimensions, due to the difficulty in measuring consumer attitudes accurately. However, they also indicated that the actual behaviours cannot be measured in every research design. A successful research strategy can be conducted by considering the psychological reasons that lead to consumption. Therefore, most loyalty-related studies (e.g., Mahony, et al., 2000; Zhang, et al., 2005; Zhang, et al., 2009) have focused on the intention-based behavioural loyalty instead of observing actual actions (i.e., actual behavioural loyalty). Some recent studies (e.g., Pease & Zhang, 2001; Braunstein & Zhang, 2005) even simply consider attitudinal dimensions. The current research concluded that behavioural loyalty should also refer to consumer retention, and both intention-based behavioural loyalty and attitudinal loyalty are important to the definition of consumer loyalty.

2.2.2 Consumer loyalty in the sport spectating events

Consumer behaviour, especially consumer loyalty, has been a topical issue in many different

industries. At spectator sport events, most sport activities are professionalized and commercialised. Profit is one of the goals for clubs or organisations. Javadein, et al. (2008) provided a model to measure the link between service quality and consumer loyalty. The results addressed that consumer loyalty can be partially explained by service quality in sport spectating events. If spectators perceive high service quality, they are likely to stay loyal by re-attending sport events in the future.

Moreover, the two types of loyalty outlined above have been studied by numerous researchers in the sport academic context. Wang, et al. (2011), Neale and Funk (2006), Parker and Stuart (1997) described that consumer loyalty at spectator sport events is more explanatory when it includes both attitudinal and behavioural dimensions. Mahony, et al. (2000) asserted that measures of behavioural loyalty are readily available in sport related indicators (e.g., attendance, television viewing). For example, Bauer, et al. (2008) used the concept of consumer loyalty to analyse sport fan behaviour. Their results included many indicators which fit into the concept of behavioural loyalty, such as the actual attendance their favourite club's live games, watching them on TV or purchasing club merchandise. However, appropriate measures of attitudinal loyalty were not as developed, even though many studies have tried to measure attitudinal loyalty. A good example of this is Mahony, et al.'s (2000) scale of attitudinal loyalty. Heere and Dickson (2008) also proposed that attitudinal consumer loyalty in sport marketing should be considered as an interaction between environmental changes (external factors) and individual levels of commitment (internal). According to these authors, spectators would refuse to switch to another club once they feel a sufficiently strong psychological bond with their chosen club. However, some studies found opposite findings and argued that the relationships between consumer loyalty constructs were not always significant. Bodet (2008) noted that consumer loyalty was not frequently investigated with concomitant consideration for its attitudinal and behavioural dimensions and that the nature of the relationship between consumer loyalty. Attitudinal loyalty does not always predict consumer repurchase behaviour in the sport context. If attitudinal loyalty

is increased to a higher level, it does not guarantee that spectators (or consumers) will come back in the future or will come to more games; intentions are not always translated into behaviours. In other words, Bodet (2008) claimed that attitudinal loyalty (or intention-based behavioural loyalty) does not always produce actual behaviour loyalty.

2.2.3 Summary

Consumer loyalty is an important construct when conducting any research focused on consumer behaviour (Lee, et al., 2007; Wang, et al., 2011). The current research adopts the definition taken from Oliver (1999:34), Zemke (1992), and Lee, et al. (2005) that consumer loyalty is a commitment to consistently repurchasing a preferred product or service in terms of their consumption experiences in the future. Three types of customer loyalty have been identified in the literature: attitudinal, behavioural, and composite loyalty (e.g., Wang, et al., 2011). Attitudinal loyalty can be described as a consumer intention (psychological commitment) which causes the actual behaviour. Behavioural loyalty refers to repeated consumption of the same product or service. There are two ways of measuring behavioural loyalty: actual behavioural loyalty and intention-based behavioural loyalty. Thus, a truly accurate understanding of consumer loyalty should consider two dimensions which are described as composite loyalty (Backman & Crompton, 1991). Also most sport-related studies dealing with the concept of loyalty took into consideration these two dimensions. For this reason, both dimensions will be considered in this research. The following section will introduce the concept of satisfaction which is seen in the literature as one of the main drivers, if not the main driver, of consumer loyalty.

2.3 Consumer Satisfaction

The definition of consumer satisfaction and its sport-related literature are discussed in this section. The definition of consumer satisfaction is presented in the first subsection. Second,

consumer satisfaction is discussed in the context of spectator sport events. Third, the contents related to consumer satisfaction are summarised.

2.3.1 The definition of Consumer Satisfaction

Although Wang and Lin (2010) claimed that Cardozo (1965) was the first scholar to apply the concept of consumer satisfaction in academic discussions in marketing, the definition of Oliver is perhaps the best known in the field (Yoshida & James, 2010). Oliver (1980) described that consumer satisfaction comes from the comparison between consumers' perceptions of actual product or service performance and prior expectations. In the development of knowledge of consumer satisfaction, it is noticeable that the emotional elements of consumer responses (i.e., positive feelings or pleasure) were discussed and included in several studies focusing on the concept. For instance, Oliver (1997) suggested that consumer satisfaction is a pleasurable fulfillment response toward a good, service, benefit, or reward. Howard and Sheth (1969) described that it is a mental state (with emotions and feelings) of consumers after evaluating their expenditure on the product or service purchased and the reward they obtained (Anderson & Narus, 1990; Oliver & Swan, 1989a; Kotler, 2003). The assessment of consumer satisfaction evokes positive feeling and can be seen as including emotional reactions to the performances of service encounters. Rust and Oliver (1994:73), McDougall and Levesque (2000) and Hu, et al. (2009) explained that consumer satisfaction is a summary of cognitive and affective reactions to a single or prolonged set of service incidents (as it could be a long-term relationship). It can also be seen as an overall assessment of the product or service providers, which is highly correlated with perceptions of service quality, and the effect of the assessment upon consumers' intentions of returning to the same providers in the future. In other words, consumer satisfaction is an overall evaluation of the gaps between expectations and actual performances. Several commonly accepted components of consumer satisfaction are identified (Giese & Cote, 2000): First, consumer satisfaction is a kind of cognitive and/or emotional responses. Second, those responses are emphasised by specific focuses (i.e., product, consumption experience). Third, those

responses occur at specific periods (i.e., during, or after one transaction, after a series of consumptions). The current research agrees that those three components should be taken into consideration to measure consumer satisfaction. Moreover, consumer satisfaction is an outcome which is connected with post purchases phenomena (i.e., repeat purchase or consumer loyalty) (Surprenant, & Churchill, 1982; Jamal, & Naser, 2003; Mishra, 2009; Siddiqi, 2011). Numerous studies about consumer satisfaction related the concept to other consumer behaviour variables (e.g., consumer loyalty or retention) and tried to focus on specific aspects of consumer satisfaction in terms of industry (i.e., specific product or service characteristics).

Although Cronin Jr. and Taylor (1994) claimed that a single measurement item is enough for asking consumers' overall impression towards product or service, it can represent a limitation in terms of validity as it cannot fully apprehend the broadness of the concept. Most studies, especially in the areas of social psychology, organization theory, and marketing, measured consumer satisfaction using multiple items. They can vary due to differences between industries or research subjects (Singh, 1991). The measurement of satisfaction can be explained as the disconfirmation resulting from the comparison of pre-purchase consumer expectations and perceived actual performance of the product or service. This theoretical definition of the formation process is often used as the criterion for assessing satisfaction (Oliver, 1980; Westbrook, 1980; Bearden & Teel, 1983; Kao, et al., 2007). Rust and Oliver (1994), Johnson, et al. (2002), Yuan and Wu (2008) explained that consumer satisfaction refers to the degree to which a consumer believes that the possession or use of a service evokes positive feelings. It can be conceptualised in two perspectives: *transaction-specific* and *overall (cumulative)* satisfaction. The transaction-specific dimension refers to consumers' assessment of their emotional response to a performance after one specific transaction (Howard & Sheth, 1969; Engel, et al., 1995; Oliver, 1980). The overall (cumulative) dimension encompasses repeated transactions and can concern a specific period in time (e.g. a sport season) (Patterson & Spreng, 1997; Churchill & Surprenant, 1982; Fornell, 1992; Shankar, et al., 2003). Considering the relevance of these two

dimensions in the sport spectacle context with various games (i.e., transactions) and seasons (i.e. a set of transactions), the current research thus adopts multidimensional conceptualization of consumer satisfaction in order to completely measure the concept.

2.3.2 Consumer Satisfaction in the sport spectating events

As for other industries, Caro and García (2007), Kouthouris and Alexandris (2005) and Bodet (2006) concluded that consumer satisfaction have a positive connection with behavioural intentions at sport spectating events. For instance, Cronin Jr., et al. (2000) assessed the effect of consumer satisfaction on consumer behavioural intentions in six service environments (including sport events and health clubs). The finding shows that consumer satisfaction can affect future revisit intentions of attending sport events. It is also in line with other studies (e.g., Zhang, et al., 1998; Kwon, et al., 2005; Brady, et al., 2006). In other words, customer satisfaction is seen by many authors as a reliable predictor of revisiting intentions in sport spectating events (e.g., Cho, et al., 2004; Tian-Cole, et al., 2002; Yoo, et al., 2003; Lee, et al., 2011).

2.3.3 Summary

Oliver (1980) described that consumer satisfaction comes from the comparison between consumers' perceptions of the performance of a product or service and prior expectations. According to many authors, consumer satisfaction integrates both cognitive and affective elements. Consumer satisfaction is an overall assessment of the product or service providers which influences consumers' future intentions to return to the same product or service providers. This was particularly found in the sport spectatorship context. Consumer satisfaction is differentiated between transaction-specific satisfaction which, in the sport spectatorship concept, concerns a single game, and overall satisfaction which can concern all past games attended or all the games attended over a specific period like a season. Finally, most studies have measured the concept using multi-item scales to take its broadness into account.

2.4 The relationship between Consumer Satisfaction and Loyalty

The relationship between consumer satisfaction and loyalty was confirmed by many studies (e.g., Agus, 2004; Pollack, 2009; Lenka, et al., 2009). Some previous correlative studies (e.g., Oliver & Swan, 1989b; Fornell, et al, 1996; Reynolds & Arnold, 2000; Gerpott, et al., 2001; Mittal & Kamakura, 2001; Ranaweera & Prabhu, 2003; Sim, et al., 2006; Keiningham, et al., 2007; Kao, et al., 2007; Heung & Ngai, 2008; Kim, et al., 2009) indicated that consumer loyalty is an outcome of consumer satisfaction which means that when the consumers display higher levels of satisfaction, they are likely to give more positive WOM endorsement and remain loyal. Gale and Wood (1994) indicated that consumer satisfaction is the first step towards archiving customer loyalty. Torres-Moraga, et al. (2008) also proposed that consumer satisfaction can be seen as a direct antecedent of loyalty. This relationship was also demonstrated in sport spectacle contexts (Bodet & Bernache-Assollant, 2011). Ferrand, et al (2010), and Kouthouris and Alexandris (2005) focused on the relationship between consumer satisfaction and intention-based behavioural loyalty in sport organisations, and their results showed there is no strong evidence to prove that higher consumer satisfaction is able to guarantee better intention based behavioural loyalty. This finding is consistent with the research which was conducted by Bodet (2008). The relationship between consumer satisfaction and loyalty is demonstrated in the Figure 1. However, other variables were also found to influence consumer loyalty and satisfaction cannot alone explain the development of consumer loyalty (Bodet & Bernache-Assollant, 2011). Among them, the concept of service quality has been identified as an antecedent and will be presented in the following section.

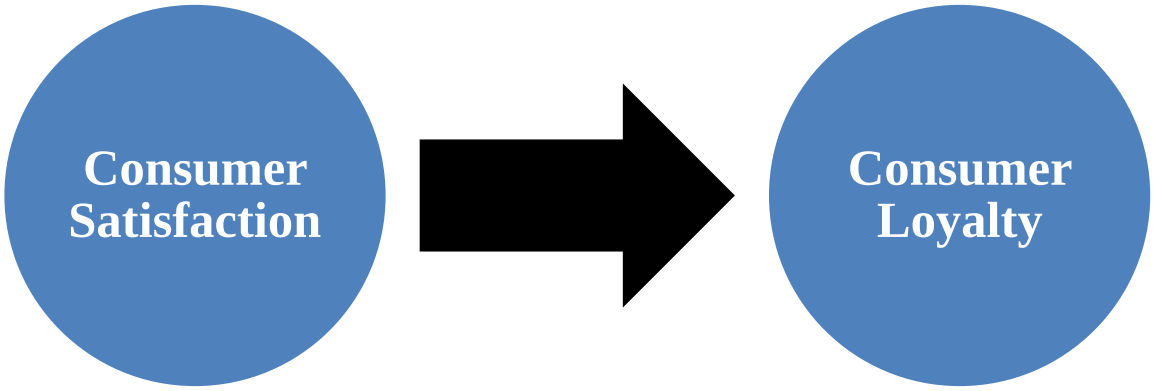

Figure 1: The relationships between consumer satisfaction, and loyalty

2.5 Service Quality

In this section, the definition of service quality and its role in the literature are discussed in the following section. The definition of service quality is described in the first subsection of the section. Second, service quality is discussed in the context of spectator sport events. Third, a summary of this section is provided.

2.5.1 The definition of service quality

Ko, et al. (2011) provided a definition of service quality which is in line with Parasuraman et al. (1985:16) and Zeithaml and Bitner (2003) stating that "*service quality is a global judgment or attitude relating to the superiority of a service"*. Both Zeithaml (1988), and Bitner and Hubbert (1994:77) used a similar definition, and they emphasised that service quality is an "*overall impression*" (or evaluation) of a product or service. Theodorakis and Alexandris (2008) relied upon other scholars' work (e.g., Spreng & Chiou, 2002; Burton, et al., 2003; Olorunniwo, et al., 2006; Dagger, et al., 2007; Keillor, et al., 2007; Lee, et al., 2004) and concluded that service

quality is a key issue for service industries because it was identified as a main factor in increasing consumer loyalty and making profits for organisations. Consumers who have positive perceptions of service quality are more likely to have higher levels of satisfaction, which in turn leads to further attitudinal and behavioural loyalty to the organisation and its services (Theodorakis & Alexandris, 2008).

In order to assess the capacity of services to meet expectations on a regular basis, Parasuraman et al. (1998) developed an instrument which known as SERVQUAL, which is a multi-dimensional instrument to assess perceived service quality. However, although SERVQUAL has been widely used in the academic literature, there has been a debate about its relevance as it included two measures for each service dimension: one measuring expectations and one measuring performance. Specifically, several authors supported a performance-only measure, known as SERVPERF, to better assess service quality and its variance (Cronin Jr. & Taylor, 1944). Sureschander, et al. (2001) and Brady, et al. (2002) indicated that SERVQUAL failed to capture other components, such as emotions, and that it may have a greater impact on the evaluation of service quality. Klaus (2007) also supported the point of view, advocated by Swan and Bowers (1998) and which stated that contemporary research on service quality and satisfaction was limited and missed other factors. For instance, consumer experience which includes emotional factors and social norms can be one important factor. This standpoint is consistent with Schmitt's (2003) explanation of why experience is vital in customer behaviour research. Klaus (2007) also estimated that consumer experience dimensions could serve as a guide for all service encounters. Although some scholars (e.g., Schneider, White, & Paul, 1998; Schembri, 2006) claimed that experience dimensions can be seen as some of the key determinants of service quality evaluation and could complement the existing measurements of service quality, most service quality measurement instruments do not integrate the emotional aspects of the service encounter (Liljander & Strandvik, 1997; Prenshaw, Kovar, & Burke, 2006).

2.5.2 Service Quality in the sport spectating events

Various studies from the fields of marketing strategies (e.g., Dale et al., 2005; Kelley & Turley, 2001) and operational costs down strategies (e.g., Getz et al., 2001) have concluded that, in the context of sport spectating, spectators (or consumers) evaluate service quality based on several dimensions: team performance/game result (e.g., Greenstein & Marcum, 1981; Hansen & Gauthier, 1989; Shofield, 1983), amenities and additional services (e.g., Hansen & Gauthier, 1989), human resource management (i.e., staff, or volunteers) and service-delivery systems (e.g., Getz, 2005). However, Theodorakis, et al. (2013) described that service quality in the sport spectating context could be distinguished into two types: First, *outcome quality* refers to a core aspect of sport product or service which is focused on what the consumers are left with, after the production (or consumption) process is over. Second, *functional quality* refers to the peripheral or supportive elements of sport product or service (e.g., the facility or stadium environment, the supporting services). Howard and Crompton (2004) and Ko, et al. (2011) explained that sport spectating events represent a large, expanding, and competitive industry. However, many professional sports leagues in various countries are struggling to balance between reducing operational costs and providing the best-possible on-field products and services. This means that many sport spectating event providers are facing dissatisfaction, and sometimes resistance, from their consumers as a result of increasing prices and rising expectations regarding sport spectating event quality. As for other service industries, enhancing the profitability of the sport spectating event relies on providing high-quality products or services to consumers so as to improve consumer satisfaction and loyalty (Fornell, 1992; Anderson & Sullivan, 1993; Anderson, et al., 1994; Dagger & Sweeney, 2007). Thus, Martinez, et al. (2010) believed that service quality is also one of the most important issues for contemporary sports marketers because service quality is a seen as a key antecedent of positive consumer behaviour variables (i.e., customer satisfaction and loyalty). Offering high-quality sport spectating products or services has become a critical issue for professional sports organisations. In this regards, some studies (e.g., Hill & Green, 2000;

Greenwell, et al., 2002; Tsuji, et al., 2007; Yoshida & James, 2010) have concluded that service quality has been seen as an antecedent of consumer satisfaction and game attendance (i.e., consumer loyalty) in the context of spectator sports. Theodorakis, et al. (2009) indicated that service quality has both direct and indirect (via consumer satisfaction) connections with consumer loyalty. However, Theodorakis and Alexandris (2008) found that the link between service quality and spectators' repurchase intentions is weak and restricted due to some personnel and other dimensions.

As discussed in the previous section, the SERVQUAL is well-known for assessing service quality, but it is not specific enough when considering particular industries or research contexts. Brady and Cronin Jr. (2001), Kelley and Turley (2001), Rust and Oliver, (1994) claimed that it is important for industries to develop a comprehensive, and specific framework and instrument to measure service quality in specific industries. Thus, several researches (e.g., Getz, et al., 2001; Kelley & Turley, 2001; Westerbeek & Shilbury, 2003) have attempted to develop a foundational instrument for assessing service quality in the sport spectating context. Ko, et al. (2011) proposed the Model of Event Quality for Spectator Sport (hereafter referred to as MEQSS) and developed an instrument called the Scale of Event Quality for Spectator Sports (hereafter referred to SEQSS) in order to test whether the MEQSS could be empirically supported. The scale was adapted from Parasuraman, et al. (1988), Crompton, et al., (1991), Howat, et al. (1996), Brady and Cronin Jr. (2001), and Ko and Pastore (2004) and administered to spectators who attended MLB games. The scale includes 12 dimensions: skill performance, operating time, information, entertainment, concessions, employee interaction, fan interaction, sociability, valence, ambience, design, and signage. Therefore, SEQSS can be used as a foundational instrument for assessing service quality of professional baseball events. Consequently, as the current research context also concerns baseball games, the SEQSS was adopted and revised by the current research (The process is discussed in the section of 5.2.1).

2.5.3 Summary

Service quality is *"a global judgment or attitude relating to the superiority of a service"* (Parasuraman, et al., 1985:16) and has been positively associated with the concepts of consumer satisfaction and consumer loyalty, which indicates a double effect (i.e., direct and indirect) on loyalty. However, not all studies in the sport spectating context have supported the direct link between service quality and loyalty, and Theodorakis and Alexandris (2008) found the link to be weak. Service quality comprises several dimensions which can be either associated to outcome or functional quality. In the context of sports, the SEQSS identifies 12 dimensions which were validated in the context of baseball games. For this reason, this scale will be used in the current study.

2.6 The relationships between Service Quality, Consumer Satisfaction and Loyalty

Service quality has been identified as one of the factors influencing the level of consumer satisfaction and loyalty. It has a positive impact on consumers' behavioural intentions (Bitner, 1990; Cronin Jr., et al., 2000; Dabholkar, et al., 2000; Fullerton, 2003; Carlson & O'Cass, 2010). The relationships between service quality, consumer satisfaction, and loyalty are considered to be the most important factors for organisations to increase their market share and profit (Rust & Zahorik, 1993; Gounaris, et al., 2007). This means organisations have to consider the relationships in order to be successful. Gale and Wood (1994) identified the links betwen service quality, customer satisfaction, and loyalty and claimed that the links can be seen as a chain which shows that service quality positively influences consumer satisfaction which in turn positively influences consumer loyalty. For instance, as Tsai and Chen (2011) described, providing good levels of service quality will satisfy consumers and then increase the probability for consumers to come back and repurchase the same product or service again - ths increasing profits in the long-term. This process is also known as the satisfaction-loyalty-profit chain. Although service

quality has been widely validated as an antecedent of consumer loyalty, the relationships are not automatic and sometimes remain unclear (Oliver, 1980; Fornell, 1992; Tam, 1999; Koo, et al., 2009; Theodorakis, et al., 2013). For instance, as previously discussed, Bodet (2008) found a positive link between satisfaction and attitudinal loyalty but did not find a significant link between satisfaction and behavioural loyalty. Also, Taylor and Baker (1994), Barnes, et al. (2004) and Agus (2004) have found that the relationships between service quality, consumer satisfaction and loyalty tend to be positive but strongly vary between products or services industries, and situational factors. Furthermore, some studies (Theodorakis & Alexandris, 2008) did not find a strong positive link between service quality and loyalty. Based on these previous discussions, the current research aims to test the relationships between service quality, consumer satisfaction and loyalty to see whether they can be supported in sport spectating events and in Taiwanese baseball games in Taiwanese professional baseball games in particular. There are two hypotheses proposes that service quality is an antecedent of consumer satisfaction and loyalty and has a direct positive effect on these two variables ($\boldsymbol{H_1}$ **&** $\boldsymbol{H_2}$) which is building on the satisfaction-loyalty link previously identified ($\boldsymbol{H_3}$) (see Figure 2). However, as these relationships were not always supported, it seems necessary to add another perspective to this model, which will be done with the integration of consumer experience, which is discussed in the following section.

$\boldsymbol{H_1}$**: Service quality** has a positive effect on **consumer satisfaction**

$\boldsymbol{H_2}$**: Service quality** has a positive effect on **consumer loyalty**

$\boldsymbol{H_3}$**: Consumer satisfaction** has a positive effect on **consumer loyalty**

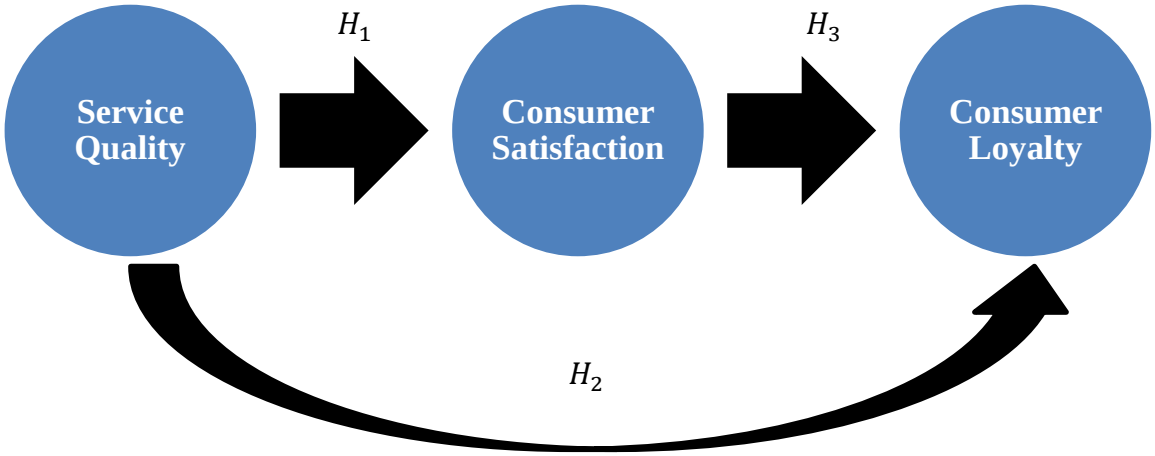

Figure 2: The relationships between service quality, consumer satisfaction, and loyalty

2.7 Consumer Experience

The discussion about consumer experience is structured into seven sections. The definition of experience according to different perspectives is discussed in the first section. The second section discusses the nature of experiences in commercial activities and consumption contexts. The following two sections discuss two key experience-related concepts in business consumption: hedonic (positive) experiences and ordinary and extraordinary experiences. The distinction between experience marketing and experiential marketing is then considered in order to understand what an experience focused marketing strategy really is. The differences between traditional marketing and experiential marketing approaches are then outlined. The next section focuses on consumer experience in sport spectating events, the last section summarises the discussion of contents related to the concept of consumer experience.

2.7.1 The definition of Experience in marketing and management

The definitions of experience are diverse and perplexing. This is partly because “experience” has been studied in many different fields and has been approached with wide-ranging

explanations and perspectives (Montonen & Tanski, 2004; Schmitt, 2011; Walls, et al., 2011). For instance, Maslow (1976) and Thorne (1963) in sociology and psychology; Abrahams (1986), and Bruner (1986) in anthropology and ethnology; O'Sullivan and Spangler (1998), Schmitt (1999), Pine and Gilmore (1999), and Lewis and Chambers (2000) in economics and marketing. Schmitt (2011), Hosany and Witham (2010) and Helkkula (2011) began to define the concept by looking at its dictionary definition which states that: Experience includes an event, a process, a phenomenon, or a change. It could be a process of events, or a single event. It could be a "real" and "physical" phenomenon, or a "virtual" and "observed" phenomenon, or a phenomenon which includes both "real" and "virtual" elements. Its subject could be an individual, a community, a nation, or humankind (Several some similar definitions of consumer experience are listed in appendix 1).

Since Holbrook and Hirschman's article was published in 1982, the concept of experience has been discussed in the marketing and management literature for over three decades (Liao, 2008; Lanier Jr., 2008; Vanhamme, 2008; Tynan & McKechnie, 2009). The terms and definition in the marketing and management literature is also perplexing and unclear, while considerable discrepancies exist between the understandings and definitions of different scholars (Poulsson & Kale, 2004; Walls, et al., 2011). A range of broadly synonymous terms are used to represent the notion of experience in the literature. These include, customer experience (e.g. Hagerdorn-Rasmussen & Sundbo, 2008), consumer experience (e.g., Tsai, 2005), consumption experience (e.g., Holbrook & Hirschman, 1982), brand experience (e.g., Brakus, et al., 2009), and total customer experience (e.g., Mascarenhas, et al., 2006). Skard, et al. (2011) concluded that those terms are used interchangeably in the literature, but that "customer experience" is the most common one. Meanwhile, they also acknowledged that the term "customer" is a subset of "consumer", but they believed that there is no point in attempting to distinguish between those two terms in relation to the notion of experience. Thus, the current research adopts "consumer experience" in order to represent the broad concept.

The definitions of experience in the marketing and management literature are similarly multiform. The various definitions of consumer experience come from many scholars (e.g., Abbott, 1955；Bruner, 1986；Holbrook & Hirschman, 1982；Schmitt, 1999；McLuhan, 2000b; Liao, 2008). O'Sullivan and Spangler (1998) gave a definition of experience from a commercial point of view: consumer experience is about personal internal needs involved in consumption activities which engage physical, mental, emotional, social, or spiritual issues. Schmitt (2011) noted that most definitions of consumer experience are defined in a narrow way. Gentile, Spiller and Noci (2007) made a broader definition which is closer to the "state-of-the-art" on consumer experience. Both narrow and broad definitions of experience in the marketing and management literature agree that the concept of consumer experience is constructed, staged, and created by product or service providers. The difference between them is that a narrow view (e.g., Gupta & Vajic, 2000) indicates that consumer experiences should only focus on the part which is controllable by products or services providers. However, a broad view (e.g., Van Doorm, 2006; Heinonen, et. al., 2010) claims that consumer experience is not only controllable, but also includes uncontrollable elements. Schmitt (2011) revised and redefined the definition provided by Gentil, et al. (2007:397):

> *The customer experience originates from a set of interactions between a customer and a product, a company, or part of its organisation, which provoke a reaction. This experience is strictly personal and implies the customer's involvement at different levels (rational, emotional, sensorial, physical, and spiritual). Its evaluation depends on the comparison between a customer's expectations and the stimuli coming from the interaction with the company and its offering in correspondence of the different moments of contact or touch-points.*

According to the various definitions of consumer experience in the marketing and management literature, Skard, et al. (2011) identified common characteristics of consumer experience: (1) experiences are subjective; (2) experiences are internal or mental; (3) experiences

are outcomes of multiple touch points which may be direct or indirect, controllable or non-controllable between the brand and the consumer; (4) experience may include multiple relations (e.g. between consumers, or between the brand and consumers), and (5) experiences are a multidimensional construct since they involve different types of consumer responses. The current research adopts the term of "consumer experience" and follows Schmitt's (2011) definition presented above. Moreover, Hosany and Witham (2010) found that a general agreement between the conclusions of scholars (e.g., Schmitt, 1999; Gentile, Spiller, & Noci; 2007; Schmitt & Rogers, 2008; Tynan & McKechnie, 2009) is that a multidimensional but "holistic" evaluation is a common characteristic of consumer experience. Other scholars (e.g., Brakus, et al., 2009; Walls, et al., 2011; Palmer, 2010) indicate that the key concept of consumer experience is not only represented by the term "holistic", but focuses on "hedonic (positive)" consumption experiences for consumers. The next section discusses the holistic and hedonic (positive) aspects of consumer experience.

2.7.2 Holistic (Complete) and Hedonic (Positive) Consumer Experience

As well as the discussion of various definitions of the concept, the literature has also focused upon the contexts in which these experiences have been produced. For instance, Schmitt (2011) described that consumer experience in marketing and management can be categorised into two major usages: One being the sense of accumulated knowledge (e.g., experience curve) and another being that of direct observation (e.g., experience goods). Hosany and Witham (2010), relying upon the work of other scholars (e.g., Addis & Holbrook, 2001; LaSalle & Britton, 2002; Prahalad & Ramaswamy, 2004), expressed that consumer experience is the result of interactions between consumers and product or service providers which means consumers are able to co-create with product or service providers their own unique experience. Some scholars believe that consumer experience can also be seen as a process. Lanier Jr. (2008) gave a description which is in line with this standpoint: a holistic (complete) consumer experience is a process which means the human mind is holistic, parallel, and greater than the sum of its parts. It is a

dynamic and dependent set of relationships. Shaw (2007), Tynan and McKechnie (2009), Schmitt (2008), and Skard, et al. (2011) described that consumers should not simply be considered as information-processors and that a more holistic view, in which consumers are both rational and emotional, seems more legitimate The time dimension has also been discussed in the context of consumer experience. For example, Schmitt (2011) claimed that consumer experiences could be classified into two categories. The first of these holds that experiences refer to "the past" (referring to knowledge and accumulated experiences over time). In the second, consumer experiences are "ongoing" perceptions, feelings and direct observations. This standpoint addresses the importance of the time issue in the notion of consumer experience. Shaw (2007) and Tynan and McKechnie (2009) combined the time and the process dimensions and posited that consumer experiences comprise three stages. When these three dimensions of experience are taken into account, the consumer's holistic experience is built. The first one is the "pre-experience stage": a previous experience which takes place before the consumer is involved in a new experience. The second is the "experience stage": the actual experience which can be controlled by marketers. Finally, the "post-experience stage": the consumer's reaction following the consumption of the product or service.

Walls, et al. (2011) proposed a framework of consumer experience (see Figure 3) applied to the hospitality and tourism industry: A holistic (complete) consumer experience should include internal (core) and external (peripheral) elements. The internal element is made of two axes describing four components. The first axis represents ordinary versus extraordinary experiences. The second axis represents cognitive (objective) versus emotive (subjective) aspects. The external (peripheral) elements of consumer experience consists of four factors: individual characteristics, situational factors, physical experience elements, and human interaction elements (Figure 3 provides a grahic illustration of this framework.). The internal and external elements do not exist in a vacuum condition. Each external factor slightly strongly influences each component of internal elements in order to make each individual's experience unique. The

perspectives of the framework considered the relationships which are acquired from product or service providers and consumers so as to connect the entities of commercial and consumer experience. Each connection between internal and external element is able to create a meaningful consumer experience so as to influence consumer satisfaction and loyalty. Rust and Oliver (1994), McDougall and Levesque (2000) and Hu, et al. (2009) described that consumer satisfaction is a summary of cognitive and affective reactions to a single or prolonged set of service incidents (as it could be a long-term relationship). Thus, the assessment of service quality is mixed with cognitive (objective) and emotive (subjective) elements within ordinary experience. However, Pine and Gilmore (1999), Kruger (2001), Garg, et al. (2011) and Garg, et al. (2011) suggested that competitive advantages can be easier to build by providing extraordinay within emotive (subjective) experiences. A good example of this is provided by Walls, et al. (2011) in the context of the tourism industry. Although being a tourist can be seen as an extraordinary experience (something out of ordinary life) and evaluated through a rational (objective) lens, focusing on extraordinary experiences with a strong emotive (subjective) component has been suggested as a new strategy to build up competitive advantages (Pine & Gilmore, 1999; Kruger, 2001; Walls, et al., 2011). In other words, a holistic (complete) approach should consider both internal and external elements of consumer experiences. Compare with the other two internal elements, both cognitive experiences and emotive extraordinay experiences are two effective external, which connect with external elements of consumer experience, to enhance consumer satisfaction and loyalty.

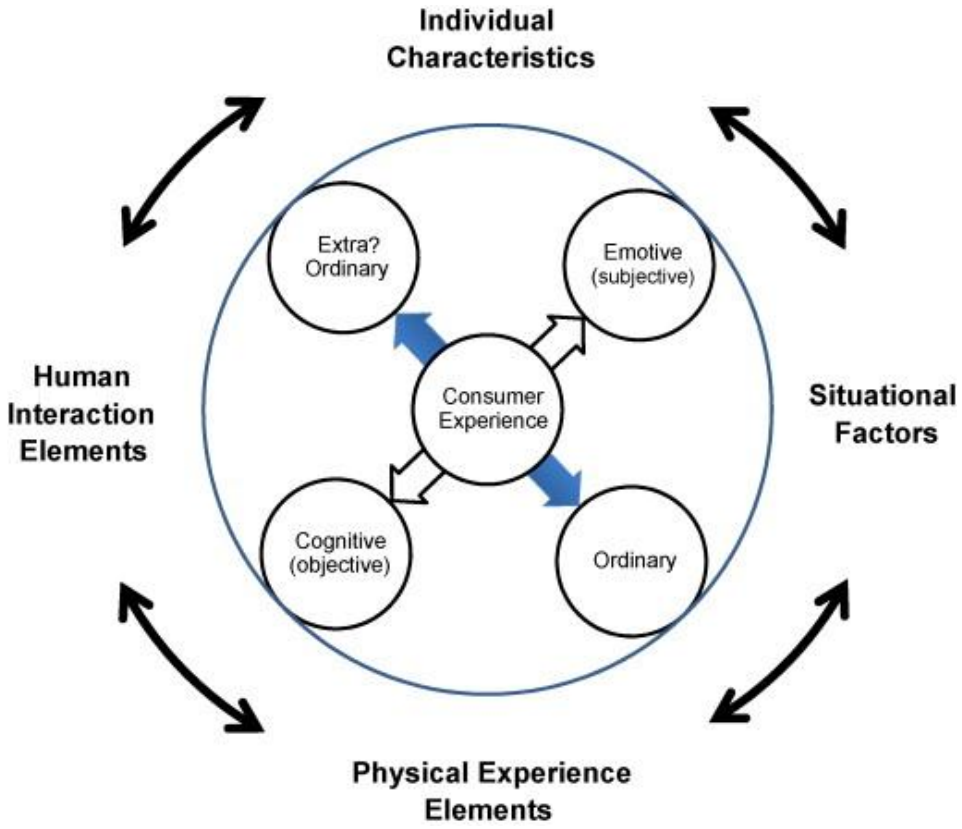

Figure 3: A framework of consumer experience
Note. From: Walls, et al. (2011)

Moreover, Brakus, et al. (2009) noted that consumer experiences arise in many types of settings. An experience directly or indirectly occurs when consumers consume products or services and are exposed to advertising and marketing communications. These authors claimed that a holistic (complete) consumer experience has three different types: (1) *Product Experience*: This type of experience occurs when consumers interact with products. It either can be direct when there is a physical contact with the product or indirect when a product is presented virtually within an advertisement (Hoch & Ha, 1986; Kempf & Smith 1998). Using the Starbucks coffee shops as an example, product experience relies on the consumers' attitudes towards the coffee. Consumer experience is considered as a reflection of consumers' feeling, preference and assessment of the product. (2) *Shopping and Service Experience*: This type of experience can be seen when a consumer interacts with a shop's physical environment, its

personnel, and its policies and practices (Hui & Bateson, 1991; Kerin, et al., 1992). This type of experience is about the purchasing environment and the human encounter. Following the example of Starbucks coffee, the shops provide a special coffee theme in the shop environments. Their staff members are well-trained with an extensive knowledge about coffee and skilled at making it. Furthermore, Brakus, et al. (2009) emphasised that this type of experience is an effect of atmospheric factors, such as the colour of the shop, the sound of the shop, the atmosphere of the shop or the performance of the staff. (3) *Consumer (consumption) Experience*: This is an experience that occurs when consumers consume and use products. This type of experience is focused on the process, which is multidimensional and includes hedonic dimensions such as feelings, fantasies, and fun (Holbrook & Hirschman, 1982). This type of experience can be easily seen in some entertainment activities and services such as museums, baseball (sport), river rafting and skydiving. Therefore, a holistic (complete) experience not only considers the first two types of experience (product experience and shopping and service experience), but also focuses on providing hedonic (positive) experiences to consumers.

Walls, et al. (2011) also suggested that product or service providers should switch their concentration from services to experiences because, from the marketing point of view, consumers want more than to just consume products and services for their utilitarian value. On the contrary, they are looking for unique consumption features in order to obtain hedonic (positive) consumption experiences. Solomon and Corbit (1974:120) claimed that there are five distinctive features of consumer experience patterns which address how the hedonic aspect plays as an important role in consumer experiences: (1) the peak of the primary hedonic process or state is catalyzed by stimuli; (2) a period of hedonic or affective adaptation includes the intensity of the hedonic state is maintained or declined; (3) a steady level of the hedonic process continues when stimuli intensity is maintained; (4) a peak of affective after-reaction, which quickly follows stimulus termination and whose quality is hedonically very different from that of the primary hedonic state; and finally; (5) the after state in which the experience decays and subsequently

disappears. According to these discussions (e.g., Schmitt & Rogers, 2008; Tynan & McKechnie, 2009; Brakus, et al., 2009; Walls, et al., 2011), the conclusion is that organisations which would like to focus on experience aspects should emphasise the "holistic" and "hedonic" components. Palmer (2010) addressed the hedonic meaning in consumer experience as follow:

> *Hedonistic definitions of consumer experience imply a variety of stimuli that create value for consumers. The effects of individual stimuli have been extensively researched, for example; the physical setting of a service encounter (Grove et al., 1992; Gupta and Vajic, 2000); customer-focused product design with expected levels of quality (Price, Arnould & Tierney, 1995), the service delivery processes (Harris et al., 2001); aspirational and utilitarian brands (De Chernatony & McDonald, 2003); and supporting relationships (Gummesson, 1997)*

Hirschman and Holbrook (1982), Wertenbroch and Dhar (2000), and Hosany and Witham (2011) also explained that products or services have both utilitarian and hedonic functions. For the utilitarian function, the focus is on tangible and functional elements of consumption. As for the hedonic function, the focus should be on intangible, aesthetic, and subjective elements of consumption. A holistic experience approach in marketing and management consequently includes both functional and emotional aspects. The emotional aspects are core elements for product and service providers which are able to deliver "hedonic" elements to consumers. Satoro and Troilo (2007), Hosany and Witham (2010) indicated that "hedonic" elements of consumer experiences are needed in "creative industries" (e.g., entertainment, fashion, music, movies, leisure or spectating) in order to support their consumption activities to increase market shares. Skard, et al. (2011) claimed that a consumer experience approach can be seen as the recognition of the importance of hedonic aspects of products or services. McLellan (2000) suggested that consumer experience should be orchestrated by product or service providers because the relationship between consumer satisfaction and experience can be seen as follows: good positive consumer experiences create consumer satisfaction whereas bad experiences or bland experiences create dissatisfaction (Garg, et al., 2011; Garg, et al., 2011). If more positive

consumer experiences are created, competitive advantages should be more easily created. However, there is no clear consensus on what good or bad experience is. Berry, et al. (2002) believed that good experience is simply when a product or service providers meet consumers' expectations without any problem. One of the most common distinctions between good or bad experience is based on characterising ordinary and extraordinary (Arnould & Price, 1993; Schouten, et al., 2007; Schmitt, 2011). In conclusion, providing holistic (complete) and hedonic (positive) experience relies on offering extraordinary experiences. Thus, defining the difference between ordinary or extraordinary experience is crucial for product or service providers, if they want to focus on the consumer experience approach and provide positive and global experiences. This issue is discussed in the following section.

2.7.3 Ordinary and Extraordinary Experiences

Arnould and Price (1993), Pine and Gilmore (1999), Montonen and Tanski (2004), and Walls, et al. (2011) claimed that an extraordinary experience refers to something out of the ordinary, something that is not expected, which usually includes some special components, such as *surprise* and the *unforgettable*. Those are important ingredients in the management of experiences and the provision of extraordinary experiences. Ordinary experience can be defined as a part of everyday life. It can be seen as routine and result, from passive stimulations. On the contrary, extraordinary experiences are more active, intense, and stylised (Schmitt, 2011). Carù and Cova (2003) indicated that special (or extraordinary) experiences cannot be successefully delivered, when consumers are not satisfied with products or services. The distinction between ordinary and extraordinary originates with romanticism which is connected with seeking intense pleasures and high arousal (i.e., extraordinary experiences) (Holbrook, 1997). It is in opposition to mundane and utilitarian consumptions of everyday life (i.e., ordinary experience). Addis and Holbrook (2001) described that romanticism, whilst a North American vision of experience, has been taken up by European marketing experts, and considers that consumers are not purely functionalist. They want become the hero of the novel of their everyday life. Holbrook (1997)

proposed that in the experiential approach (i.e., romanticism → experiential consumption→emotional responses→pleasure), sensations are more important than consumers' rationial thoughts. In other words, the aim of extraordinay experiences for consumer experience is to gain mazimum pleasure from various sensations to break out from their everyday life (Scitovsky, 1976).

Moreover, Belk, et al. (1989) explained that the difference between ordinary and extraordinary is similar to the distinction between the "sacred" and the "profane" in consumer culture theory. The term of "sacred" comes from the contemporary definition of religion which is given by some social scientists (e.g., James, 1961:42; Roberts, 1984:90). "Sacred" is a kind of status which gives the special quality of sacredness as in a religious experience. It might refer to transcendent experiences in consumption which are regarded as more significant, powerful, and extraordinary. By contrast, "profane" is the opposite concept of "sacred" and characterises experiences which lack the ability to induce ecstasy, self-transcendence, and the extraordinary. Thus, extraordinary experience in consumption is equal to the status of "sacred" and is the opposite position of the ordinary daily routine life considered as "profane" (Belk, et al., 1989). In other words, to create "sacred" experiences, product or service providers could focus on delivering surprises and unforgettable memories. In relation to the role providers can have in delivering these extraordinary experiences, O'Sullivan and Spangler (1998) identified three different types. First, experience infusers are product and service providers who infuse their product or service with an experience-focused strategy for marketability. For examples, farmers open their orchards to consumers. This does not only provide fruit, but also offers an experience to all consumers who would like to be involved in agricultural and outdoor activities. Second, experience enhancers are product and service providers who use experiences to heighten the satisfaction level of consumers or to differentiate their product or service from competitors. (e.g., airline companies, shops or hospitals). Third, experience makers are service providers who create experiences as the core feature of their service. The value of the product or service is from the experience in this

case. (e.g., entertainment industry, amusement parks, sport spectating events, or operas) However, the common characteristics of these providers are that they try to offer something different, unexpected (which may or may not include surprise and unforgettable components) on top of their original products or services. Although a complete consumer experience could include ordinary and extraordinay elements, the experiences could become merely ordinary when consumers get used to them. Therefore, for product or service providers, offering extraordinary experiences too frequently is not a sustainable strategy. If a similar experience appears too often, these experiences will become more ordinary, part of a routine. In other words, the strength of the extraordinary will die out.

Based on O'Sullivan and Spangler's (1998) experience focused industry classification, providers of sport spectating events are experience makers. Lundberg (2007) gave a good example in relation with MLB post-season games in the USA. Some spectators specifically indicated that there was something extraordinary in the game that was the main reason why they wanted to attend them. This study showed that extraordinary experiences were expected by the consumers (spectators). Lanier Jr. (2008) also interviewed baseball spectators and concluded that some extraordinary experiences cannot be controlled by product or service providers (i.e. clubs or leagues). However, providers can modify the environment (i.e., stadium and surroundings) to facilitate the creation of extraordinary experiences. Following the discussion of "sacred" (extraordinary) and "profane" (ordinary) in consumer behaviour, Belk, et al. (1989) cited an example used by Guttmann (1978), for who sport spectating includes an important specialisation of experiences and of persons, places, and times. From a managerial perspective, the value of consumer experience is based on identifying the differences between ordinary and extraordinary experiences and, as Ritzer (1999) suggested, on reproducing and systematizing consumers' enchantment. This is a challenge for products or services providers and for this reason Schmitt (1999) developed a new marketing strategy called experience marketing strategy, which is claimed to help managers to deal with this challenge.

2.7.4 Experience Marketing and Experiential Marketing

Schmitt (1999), LaSalle and Britton (2002), and Same and Larimo (2012) claimed that consumer experience will be the main component of new marketing paradigms in the future. A range of largely synonymous terms are used to refer to consumer experience in the marketing literature. For instance, O'Sullivan and Spangler (1998) used the term experience marketing, but Schmitt (1999) used experiential marketing. Some scholars (e.g., Grewal, et al., 2009; Goldsmith & Tsiotsou, 2010) have even used customer experience management (hereafter referred to as CEM) to refer to a concept which includes experience and experiential marketing. Similarly, confusion arose when Schmitt (2011) used the term experience instead of experiential marking as he did earlier (Same & Larimo, 2012). Leeflang (2011), and Same and Larimo (2012) described that the difference between experience and experiential marketing has not been extensively discussed by scholars. Most of them only have focused on comparing the differences between the traditional marketing approach and the new approach based on the concept of experience. Thus, what are the differences between the terms “experience marketing” and “experiential marketing”? Which term is the most appropriate? Same and Larimo (2012) and Varadarajan (2010) suggested that the term of “experience marketing” should be considered instead “experiential marketing”. Experiential marketing is included within the concept of experience marketing, on the basis that of “experience marketing” takes place at a strategic marketing level. The broader definition refers to a form of customer-focused marketing activities that create connections with consumers whereas “experiential marketing” could be seen as a tactic within this strategy (Schmitt, 2011).

Smilansky (2009:255) defines experiential marketing as *“a process of identifying and satisfying customer needs and aspirations profitably, engaging them through two-way communications that bring brand personalities to life and add value to the target audience”*. This is a marketing tactic which is created by product or service providers to organise the entire physical environment and the operational processes to produce consumer experience (Yuan &

Wu, 2008). In 1999, Schmitt advocated a new marketing approach called experiential marketing. He provided tactic which included two aspects *Strategic Experiential Models* (hereafter referred to as SEMs) refer to the strategic underpinning of experiential marketing. SEMs include Sense, Feel, Think, Act, and Relate and *Experience Providers* (hereafter referred to as ExPros), which is the communication tools used to apply experiential marketing. ExPros include communications, identities, products, co-branding, environment, web sites, and people. Although Holbrook (2000) and Same and Larimo (2012) argued that experiential marketing is more like a key strategic planning tool which is tactical (narrower), and not strategic (broader), this tactical approach was constructed by Schmitt (1999) and became the main theoretical foundation for consumer experience-focused research in the field of marketing and management. The tactical level is the main concern of most marketers and the differences between traditional and experiential marketing should be discussed in order to address the advantageous position of the new tactical approach. Thus, the current research agrees that there is a difference between the two terms (experience and experiential marketing), and the broader concept of consumer experience in the field of marketing and management is the main consideration. However, the tactical level represents the operational approach to create holistic and hedonic consumer experiences. Thus, the term "experiential marketing" is used in the current research but with a broader meaning including the strategic and tactical levels.

2.7.5 Experiential Marketing *versus* Traditional Marketing

Schmitt (1999) described that traditional marketing refers to a set of criteria of principles, concepts, and methodologies which have been accumulated by marketing academicians, practitioners, and consultants during the last thirty years. Traditional marketing is used to describe the nature of products, the behaviour of consumers and competitive activities in the marketplace, so as to develop new products, plan product lines, and brand extensions, design communications and respond to competitive activities. This type of marketing presents an engineering-driven, rational, analytical view of customers, products, and competition that is,

according to the author, full of untested assumptions and outmoded views. The chief assumptions of traditional marketing are that consumers are rational decision-makers who only care about functional features and benefits. However, traditional marketing is not a psychologically-based strategy. It has been developed in response to the industrial age, not the information, branding, and communications revolution in today's business environment (i.e., the emerging experiential economy which was advocated by Pine & Gilmore in 1999). In contrast with traditional marketing, experiential marketing is another marketing approach which focuses on the customers' holistic consumption experiences (Holbrook & Hirschman, 1982; Schmitt, 1999, 2011; Grundey, 2008). Carù and Cova (2003) support Hetzel's (2002) conceptualization that experiential marketing could be identified by three main characteristics: Surprise the consumers (for something unexpected), propose the extraordinary, and stimulate the five senses (i.e., sight, hearing, taste, smell, and touch). Providing extraordinary experiences in order to enhance hedonic and memorable (or unforgettable) experiences is the core value of experiential marketing (Standeven & De Knopp, 1999; Satoro & Troilo, 2007; Hosany & Witham, 2010). Therefore, marketers have to think about how to design an experience-friendly environment so as to increase the possibility of enhancing consumer satisfaction and loyalty.

Montonen and Tanski (2004) and Smilansky (2009) claimed that the main distinguishing feature of experiential marketing is that many senses are engaged and it uses more communication tools which deliver messages to consumers that are difficult for traditional marketing to convey. Urquhart (2002), Montonen and Tanski, (2004), and Smilansky (2009) also described that experiential marketing creates something unique that traditional marketing does not always emphasise. In other words, experiential marketing produces much memorable experiences than traditional marketing, as more senses are engaged, thereby making the message easier to remember. For Grundey (2008), traditional marketing approaches focus on a product or service's functional characteristics and superiority in a narrowly defined product or service category, with consumers treated as rational thinkers. The approach uses analytical, quantitative,

and verbal methods. The term ‘marketing mix’ refers to the results of the “Stimulus-Reaction” principle, which means consumers are reached passively by the stimulus of a product or service provider’s marketing mix. In contrast, an experiential marketing approach focuses on consumer experiences which can be seen from a more holistic perspective by viewing consumers as rational and emotional. This new approach is methodical eclecticism, which can be conducted using a variety of research methods. The process between stimulus and reaction is taken into account when the marketing mix is set up. In other words, the marketing mix has to consider hints behind the stimulus and reaction. A comparison chart of traditional marketing and experiential marketing is summarised by the current research based on several scholars’ standpoints (e.g., O’Sullivan & Spangler, 1998, Schmitt, 1999, & Wu, 2004; See Table 1) and shows that the main difference in terms of definition is that traditional marketing has a product-oriented focus on functional features and benefits, but experience marketing is consumer-oriented in its focus on experiences.

Table 1: Traditional Marketing *versus* Experiential Marketing

Factor	Traditional Marketing	Experiential Marketing
Definition	Focus on product function and benefit	Focus on creating holistic experiences, in order to reinforce consumers’ feelings.
Executive and analytical Tool	Based on business operators’ point of view to analyse consumer needs and characteristics, in order to make marketing plans. Good examples of executive tools: Segment, Target and Position (STP), Place, Price, Promote and Product (4Ps). Example of analytical tools: Strengths, Weaknesses, Opportunities, and Threats (SWOT). Porter five forces analysis	Based on creating consumers’ consumption experience environment, in order to provide extraordinary experience. Executive tools: Uses of experience providers (ExPros), such as: people, web sites, environment, co-branding, products, identities and communications. Examples of analytical tools: Strategic experiential models (SEMs) which includes SENSE, FEEL, THINK, ACT, and RELATE, Experiential Grid, Experiential Hybrids, and the Experiential Wheel

Note. From Wu (2004), Schmitt, (1999), O’Sullivan & Spangler (1998)

Table 1: Traditional Marketing *versus* Experiential Marketing (continued)

Characteristics	1. Focus on functional : features and benefits 2. Narrow definition of product categories and competition 3. Consumers are seen as rational decision-makers 4. Methods are analytical, quantitative, and verbal 5. Considers consumer behaviour 6. Develops new product 7. Plans product line and brand	1. Focus on consumer experience 2. Consumption as a holistic experience 3. Consumers are rational and emotional thinkers 4. Methods and tools are eclectic 5. Create good experience environment 6. Contacts consumers face-to-face
Strategic Index	Focus on three dimensions: consumer, competitor and the organisation themselves 1. Consumer: Where? Who? What kind of characteristics do they have? How to find them? What do they need? 2. Competitor: Who? Where? How do they produce and sale products? What is their marketing strategy? What are their future actions? 3. Organisation: What are their competitive advantages? How many resources do they have? What are the threats and opportunities of organisation? What are current actions?	Focus on consumer experience, consumer need, competitors' identity and marketing research 1. Consumer experience: consumers not only focus on the product function, but also request abundant experience. 2. Consumer need: focus on consumer needs of entertainment, stimulation, emotion impact and creativity in order to design consumption scenarios and marketing strategies. 3. Competitor identity: recognise competitors in terms of consumption scenarios. 4. Market research: use flexible and multi-use analysis tools, such as focus groups.
	From	To
Transition Tracking	Products and services	Experiences
	Tangible benefits	Inner needs
	From manufacturers and providers	Infusers, enhancers, and makers
	Demographics	Psychographics
	Standard of living	Quality of life

Note. From Wu (2004), Schmitt, (1999), O'Sullivan & Spangler (1998)

Schmitt (1999) articulated a clear tactical approach to be used by marketers, but he did not talk about the circumstances which are the most conducive to its deployment as a main marketing strategy. Carù and Cova (2003) analysed the role of consumer experience within experiential marketing and identified two dimensions. The first dimension ranges from consumer experience to consumption experience. This dimension emphasises that many consumption experiences do not concern a direct interaction with a market agent (i.e., family experiences, friends experiences, or citisenship experiences), and consider that consumer experience involves an exchanges within a market. In other words, daily consumption consists of experience which may occur with a market relatio (i.e., there is a direct exchange between individuals and product or service providers. This type of experience is called a consumer experience) or without a market relation (i.e., this type of experience is about the social relations which can shape the experience of consuming (Edgell, et al., 1997). It can be referred as consumption experience). The second dimension ranges from ordinary experiences to extraordinary experience. Although Carù and Cova (2003) suggested that the full breadth of consumer experience should be taken into account when planning experiential marketing, they also indicated that society-oriented consumption experiences are not planned by marketers. Thus, the most practical and relevant way to conduct experiential marketing is by focusing on market-oriented consumer experiences and both ordinary and extraordinary experiences. Carù and Cova (2003) support that a good specific position to effectively conduct an experiential marketing approach combines in particular extraordinary and market-oriented consumer experience. Based on this conclusion, the current research considers experiential marketing as the initial supply of market-oriented and extraordinary experiences. After that, marketers could extend this experiential marketing approach to other areas as illustrated by Figure 4.

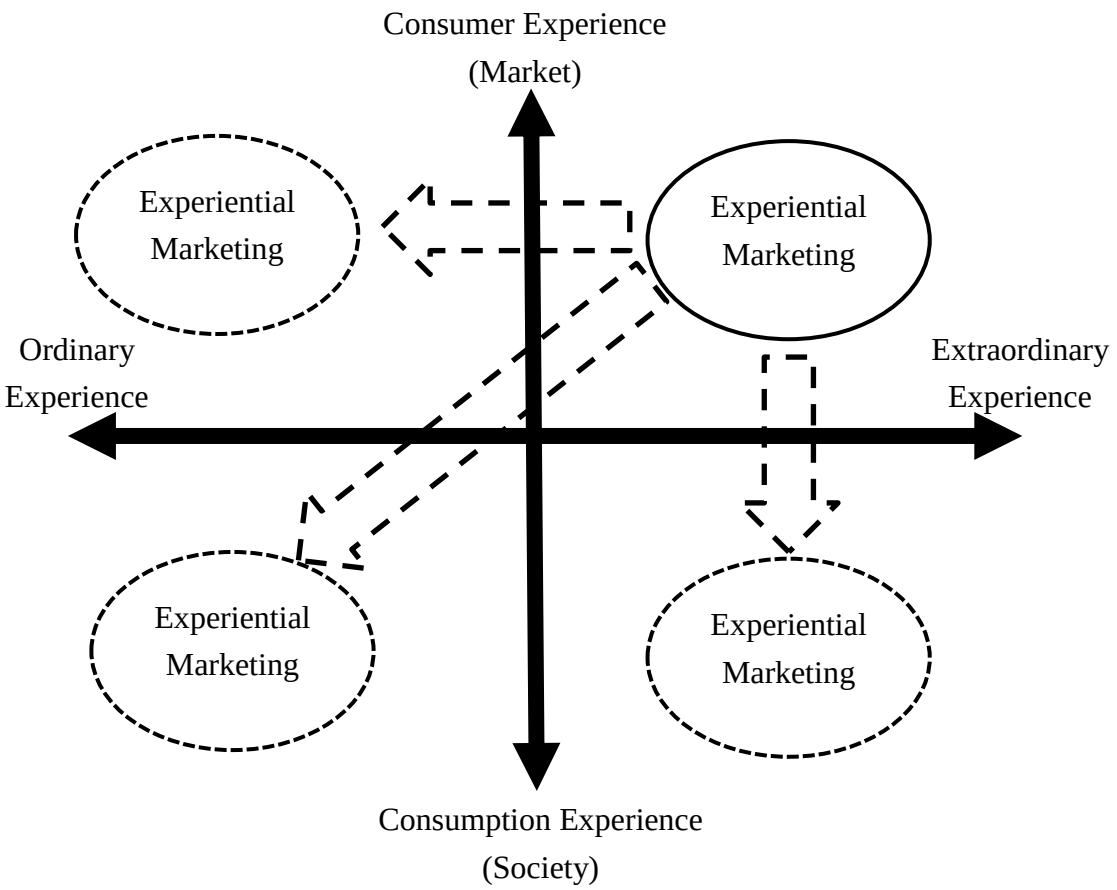

Figure 4: An ideological way of conducting experiential marketing

Note. revised from: Carù, & Cova, (2003).

2.7.6 Summary

Holbrook and Hirschman (1982) were the first scholars to introduce the concept of experience into the marketing and management field as a new perspective to analyse consumer behaviour. After that, the concept of experience has become a popular topic. However, the terms and definitions of consumer experience are diverse and not unanimous. The current research adopts Schmitt's (2010) definition which uses the term of consumer experience as subject and adopts experiential marketing as the marketing strategy employed by providers focusing on enhancing consumer experiences. According to prior discussion, customer experiences can be seen as "holistic" and "hedonic", and based on Lanier Jr. (2008) the ordinary and extraordinary aspect of experiences should always be taken into consideration. Schmitt (1999) and others have claimed that the main differences between traditional marketing and experiential marketing can be easily

identified by looking at their focuses and assumptions. Traditional marketing is product-oriented and focuses on functional features and benefits whereas experiential marketing is consumer-oriented and focuses on experiences. Experiential marketing offers more comprehensive ways (both rationally and emotionally oriented) to influence consumer behaviour and generate positive consequences for providers such as satisfaction and loyalty. Finally, following the discussion of Carù and Cova (2003), experiential marketing will be considered as the production of market-oriented extraordinary experiences in the current research.

2.8 The relationships between consumer experience and other research constructs

The first part of literature review focused on the relationships between service quality, consumer satisfaction and loyalty. The second part focuses on the links between consumer experience and these three concepts. Section 2.8.1 deals with the relationships between consumer and consumer satisfaction and loyalty while section 2.8.2 deals with the relationship between consumer experience and service quality.

2.8.1 The relationships between Consumer Experience, Satisfaction and Loyalty

MacInnis and Folkes (2010), and Same and Larimo (2012) both indicated that consumer experience is highly correlated to consumer behaviour theory which includes three subfields: consumer information processing, consumer culture theory, and behavioural decision theory. These three subfields provide different insights in terms of consumer experiences. Meyer and Schwager (2007) explained that consumer satisfaction is the net result of good experiences minus bad experiences. The relationship between consumer satisfaction and consumer experience may be equated as followed: good consumer experiences create consumer satisfaction whereas bad or bland experiences create dissatisfaction. In other words, consumer satisfaction is seen as the outcome of a series of consumer experiences. Positive consumer experiences can be seen as a major tool to create a competitive advantage (Garg, et al., 2011; Garg, et al., 2011).

Woodside, et al. (1989) described that consumer satisfaction is an attitude which occurs after consumption and describes consumers' likes or dislikes after their consumer experience has finished. Kao, et al. (2007) proposed that satisfaction exists not only in relation to products and services, but also in terms of experience.

Although the relationship between consumer satisfaction and loyalty has been studied for a long time, the relationship was not always found to be significant in a variety of research contexts (e.g., Oliver & Swan, 1989b; Reynolds & Arnold, 2000; Gerpott, et al., 2001; Mittal & Kamakura, 2001; Ranaweera & Prabhu, 2003; Sim, et al., 2006; Keiningham, et al., 2007; Kao, et al., 2007; Kim, et al., 2009), and several some scholars (e.g., Yoshida & James, 2010; Garg, et al., 2011; Walls, et al., 2011; Lee & Chang, 2012) have suggested that consumer experience could be an antecedent variable of consumer satisfaction and loyalty. Designing and delivering positive and memorable consumer experiences would be a good way to increase consumer satisfaction and loyalty. Based on the same observations Skard, et al. (2011) concluded that consumer experience could help in predicting consumer satisfaction and loyalty. In the same vein, Kouthouris and Alexandris (2005) believed that considering consumer experience and satisfaction together could help academic researchers and managers to improve their capability to predict or manage customer loyalty. Schmitt (2003) advocated that experiential marketing provides a new marketing paradigm which is customer-focused and that if the relationship between customer satisfaction and customer loyalty cannot be explained by following traditional marketing theories, it could be done by investigating new marketing theories involving consumer experiences. Indeed, Schmitt (2003) has argued that:

> *We all believe that customer satisfaction creates customer loyalty. (...) Satisfaction is outcome-oriented. Experience, in contrast, is process-oriented. If you go through the process of managing the customer experience, satisfaction is likely to be one of the results. If you pay attention to the experience, satisfaction occurs naturally. (...) Moreover, given the neat Satisfaction = Loyalty equation that the customer satisfaction paradigm is built on, most satisfaction measures have been bad*

predictors of customer loyalty. So, once again, something has to be missing (Schmitt, 2003:12-14).

If consumer experience is able to positively influence consumer satisfaction and loyalty, experiential marketing could be seen as an ideal marketing approach to achieve organizational goals (Fornerino, et al., 2008; Yuan & Wu, 2008; Cronin Jr., et al, 2000; Wu & Liang, 2009; Smilansky, 2009). However, this discussion still lacks empirical evidence in general and specifically so in the context of sport spectating events. Therefore, the current research aims to test the relationships in order to provide more empirical support to some of the theoretical assumptions. Although several scholars (e.g., Yoshida & James, 2010; Garg, et al., 2011; Walls, et al., 2011; Lee & Chang, 2012) suggested that consumer experience is an antecedent variable of consumer satisfaction and loyalty, there is still a theoretical debate about the link between consumer experience and consumer loyalty. Most scholars support an indirect effect of consumer experience on consumer loyalty (via consumer satisfaction) and whether or not a direct effect on consumer loyalty exists is still to be determined. Therefore, the current research proposes that consumer experience is an antecedent variable of consumer satisfaction and loyalty and has a direct positive effect on both variables ($\boldsymbol{H_4}$ **&** $\boldsymbol{H_5}$**;** see Figure 5).

$\boldsymbol{H_4}$**: Consumer experience** has a positive effect on **consumer satisfaction**

$\boldsymbol{H_5}$**: Consumer experience** has a positive effect on **consumer loyalty**

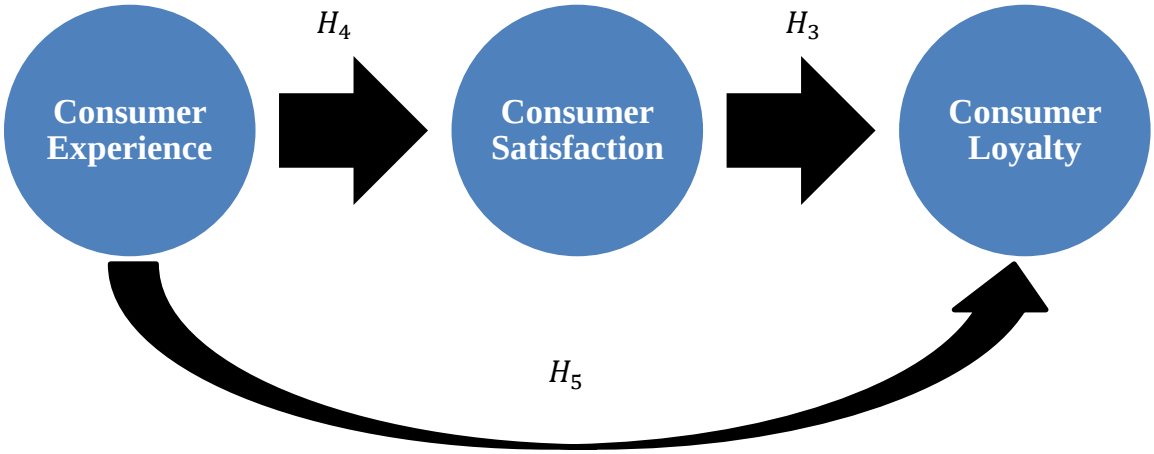

Figure 5: The relationships between consumer experience, satisfactions, and loyalty

2.8.2 The link between Consumer Experience and Service Quality

For many authors (e.g., Caruana, et al., 2000; Clemes, et al., 2011), service quality is a central part of consumer experience (Fornell, et al., 1996). Liao (2004) adopted the same point of view, and used service quality as one of several dimensions to evaluate consumer experience in CPBL. Parasuraman, et al. (1985) believed that service quality contains highly experiential properties. Most service quality determinants (e.g., reliability, responsiveness, access, courtesy, communication, and understanding/knowing the consumers) indeed display experience properties. Thus, Parasuraman, et al. (1985) proposed that consumer experience typically relies on experience properties when they evaluate service quality. Greenwell, et al. (2002) studied spectators at ice hockey games and concluded that, in line with Langeard, et al. (1981), there are at least three interrelated components between consumer experience and service quality (e.g., inanimate environment, service personnel and a bundle of service benefits). In other words, there is a clear link and some shared components between consumer experience and service quality.

However, other scholars (e.g., Yoshida & James, 2010; Lee & Chang, 2012) suggested that

consumer experience and service quality should be seen as two separate variables and both of these could be seen as antecedent variables of consumer satisfaction and loyalty. Caruana, et al. (2000) and Clemes, et al. (2011) explained that the notion of service quality only focuses on functional elements. For instance, a competitive price could provide a high contribution to consumer satisfaction through value even if the service quality is poor. Thus, even some attributes of service quality heavily rely on customer experience properties (Parasuraman, et al. 1985). Furthermore, more and more product or service providers have realised that only offering a functional value with product or services is not enough, and that they need to provide experiential elements to distinguish their product or service in the competitive business environment (Pine & Gilmore, 1999; Walls, et al., 2011). Therefore, it is important not to focus only on tangible and rational elements, but to also consider intangible subjective elements offered by product or service providers (Holbrook & Hirschman, 1982; Hosany & Witham, 2010; Garg, et al., 2012). Drotskie (2009) explained that creating experiences which include strong subjective elements has become a trend in the service sectors; while Pine and Gilmore (1999) are convinced that competitive advantage can be built by focusing on offering consumer experience. Thus, consumer experience should be seen as another influential aspect in assessing the emotional and sensory aspects of the consumption service quality, which would focus on its functional aspects. Many product or service providers have realised become experience providers and created more opportunities for consumers to react emotionally to the employees and the service setting (Arnould & Price, 1993; Richards, 2001; Montonen & Tanski, 2004). This is particularly the case in the entertainment and leisure industry in which sport spectacles can be included.

O'Sullivan and Spangler (1998) explained how some industries such as entertainment, hospitality, and sports can be seen as experience makers which provide particular experiences as their core mission. Moreover, Lundberg (2007: 187) also described that sport can be seen as an entertainment industry which is a proto industry of the experience economy. In this case,

watching sport is more like entertainment in terms of excitement and wonderful memories generated, alongside the competition. Spectators expect specific experiences from the game and other aspects during their consumption. As part of the experience industry, the main objective of sports event marketers is to create an experience environment that allows people to live great and if possible extraordinary experiences as opposed to only providing a basic functional service. For example, Howat, et al. (1996) described that because of the outcome of game, spectators are emotionally influenced by the club, rivals or players. According to the previous discussion, the current research used service quality to measure the tangible elements of the service while consumer experience was used to measure the intangible aspects of the service. As the role of the service environment and employees (i.e. ushers, sellers and players) was previously identified, a positive significant link can be hypothesised between service quality and consumer experience. However, it can also be hypothesised that the experience lived by the spectators would increase their perceptions of the quality of the functional aspects. Consequently, the current research hypothesised a significant link between service quality and consumer experience (**H_6;** see Figure 6).

H_6: There is significant link between **consumer experience** and **service quality**

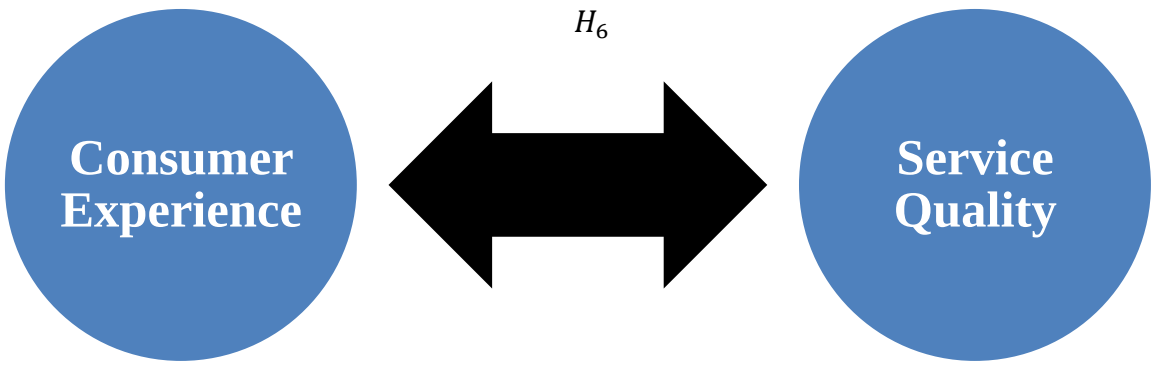

Figure 6: The link consumer experience, and service quality

2.9 The current research model

Some scholars have stated that there some reasons why the relationships between service quality, consumer satisfaction and loyalty are sometimes unclear. Heung and Ngai (2008) explained that customer loyalty may be due to high switching costs, a lack of alternatives, or could happen because consumers lack of choices in the market. Bloemer and Kasper (1995), Shoemaker and Lewis (1999) claimed that consumer satisfaction could be necessary but not sufficient to lead to repeat purchases. Consumers could be satisfied without becoming loyal; however they are unlikely to display loyalty without feeling satisfaction. On the other hand, Pont and McQuilken (2005) and Keiningham, et al. (2007) indicated that consumer loyalty cannot be predicted by consumer satisfaction alone. Cronin Jr., et al. (2000) claimed that the influence of service quality on consumer loyalty depends on consumer satisfaction (which plays a mediating role), and consumer satisfaction is partly influenced by service quality. Some scholars (e.g., Schmitt, 2003; Gibson, 2005; Vanhamme, 2008; Brakus, et al., 2009; Smilansky, 2009; Wu & Liang, 2009) claimed that both service quality and consumer experience could influence customer satisfaction and loyalty. In other words, considering the experiential elements could help in understanding the relationships between service quality, satisfaction, and customer loyalty. Moreover, Garg, et al. (2011) conducted a systematic review on consumer experience and found that 48.44% of the reviewed articles discussed consumer satisfaction as an outcome of consumer experience (e.g., Brakus, et al., 2009; Sheu, et al., 2009; Dorwart, et al., 2009; Kaplanidou & Vogt, 2010; Kim, et al., 2011; Wu & Liang, 2011). Other scholars (e.g., Brakus, et al., 2009; Sheu, et al., 2009; Wu & Liang, 2011) described that consumer satisfaction and loyalty are two consequences of consumer experience. Therefore, the current research concluded that consumer satisfaction and loyalty can be seen as the main consequences of consumer experience and service quality.

In sport-related studies, Hsiao, et al. (2011) reviewed the relationship between consumer

experience, satisfaction, and loyalty in the Taiwanese Super Basketball League (SBL). Their results show that consumer experience has a positive mediating effect on the relationship between consumer satisfaction and loyalty. However, they did not look at the direct effect of consumer experience on consumer satisfaction and loyalty. Koo and Hardin (2009) found that understanding all aspects of spectator experience is important as most experiences play a key role in driving spectator behaviours. Kruger and Saayman (2012) explained that ensuring memorable spectator experiences are provided, produces several benefits to sport organisations including spectator satisfaction, loyalty, and attendance. Liao (2004), Wu (2002), and Yang (2006) studied consumer behaviour in the CPBL and concluded that consumer satisfaction is one of the most important antecedents of consumer loyalty. In other industries, Lee, et al. (2010) and Araghchi (2008) confirmed the influence of consumer experience upon the relationships between service quality, consumer satisfaction, and loyalty. Wu, et al. (2012) found that both consumer experience and service quality affect consumers' repurchase intentions. However, service quality did not affect consumer experience in this research context. Lee, et al. (2004) investigated forest visitors and also concluded that consumer satisfaction plays a mediating role between experiences, service quality and consumer loyalty.

According to the aims, objectives, and the discussion of the relationships, the current research proposes that intangible dimensions belong to consumer experience and tangible dimensions belong to service quality so as to set up a series of hypothesises (From $\boldsymbol{H_1}$ to $\boldsymbol{H_6}$). The research model illustrated by Figure 7 summarises all the hypotheses to be tested. Moreover, it is also hypothesised that the model relationships will be influenced by individual and situational factors in line with the consumer experience framework developed by Walls, et al. (2011) and presented in Figure 3. At this stage, the hypothesis dealing with the model comparison is name $\boldsymbol{H_7}$ but more specific hypotheses will be identified following results of the qualitative approach which will help identifying the most relevant individual and situational factors to be investigated.

H_1 **Service quality** has a positive effect on **consumer satisfaction**

H_2 **Service quality** has a positive effect on **consumer loyalty**

H_3 **Consumer satisfaction** has a positive effect on **consumer loyalty**

H_4 **Consumer experience** has a positive effect on **consumer satisfaction**

H_5 **Consumer experience** has a positive effect on **consumer loyalty**

H_6 There is significant link between **consumer experience** and **service quality**

H_7 There is a significant difference between **specific contexts** in terms of the current research model

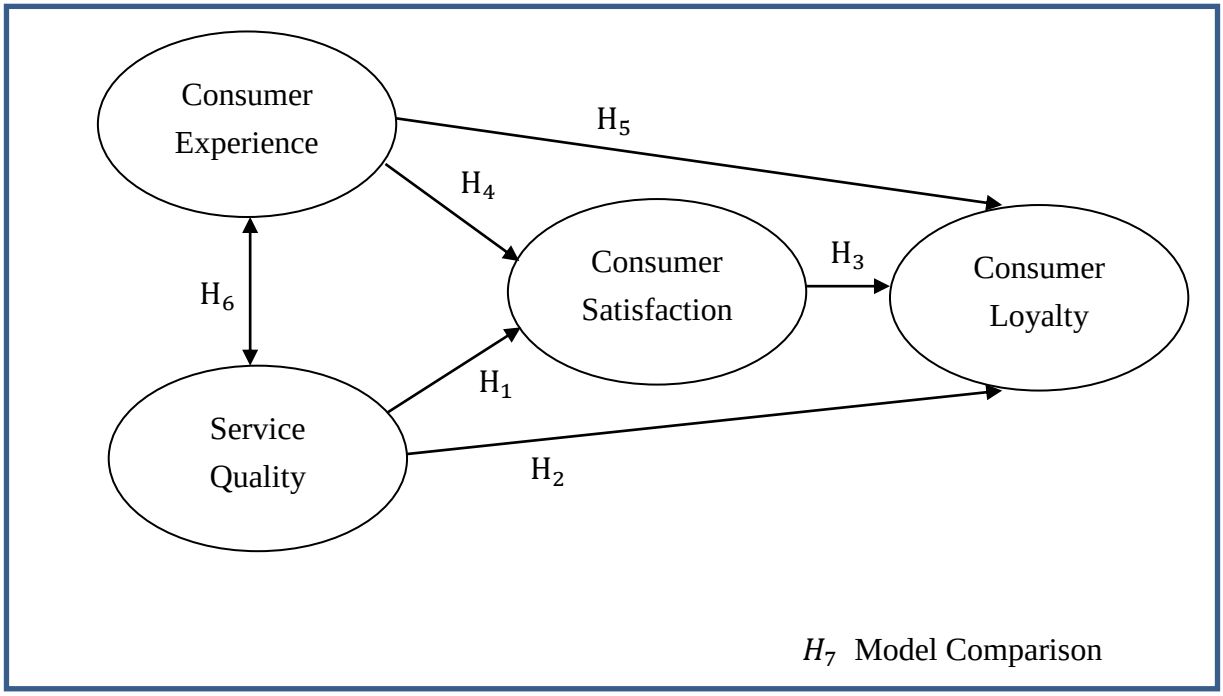

Figure 7: The research model

CHAPTER 3: Research Methodology and Methods

3.1 Introduction

As Thomas (2009) explained, research methodology is not only the study of method, but should include the philosophical discussion of the research method which is going to be used. The current research primarily adopted Blaikie's (2009) viewpoint about social research and this is justified here in relation to the methodology and methods used in the following sections. The philosophy of a paradigm is composed of its associated *Ontology, Epistemology, and Methodology*. Grix (2002:177) described that "O*ntology is the image of social reality upon which a theory is based*", and he also cited the definition of Blaikie (2000:8) that "*ontological claims are claims and assumptions that are made about the nature of social reality, claims about what exists, what it looks like, what units make it up and how these units interact with each other. In short, ontological assumptions are concerned with what we believe constitutes social reality*". Researchers investigate the social world and consider the nature of the world (Thomas, 2009). Next, Grix (2002) explained that *Epistemology is one of the core branches of philosophy, is concerned with the theory of knowledge, especially in regard to its methods, validation and the possible ways of gaining knowledge of social reality, whatever it is understood to be.* It concerns what and how researchers can know about it. The third part is *Methodology* which refers to "A *philosophical analysis of research strategies".* It focuses on how researches can acque that knowledge. The next stage is *Method*, which deals with *"the techniques used to gather and analyse data".* It focuses on the precise procedures researches to acquire knowledge. Grix (2002) believed that when the methods are chosen by researchers, they should be directly linked to the research questions and the sources of data collected. Thus, *Sources* deals with which data can be collected by the research.

Blaikie (2009:33) suggested that philosophical assumptions, which include the concepts of

ontology and epistemology, could be established after the research strategies (i.e., induction, deduction, abduction, or retroduction) are claimed, but Easton (1995) and Thomas (2009) claimed that researchers have to understand the philosophical assumptions first when designing the research. Hay (2002) and Grix (2002) also indicated that ontology is the starting point of all social research, and is followed by the clarification of epistemological and methodological positions. After that, methods and sources can be addressed when the philosophical foundations are asserted (see Figure 8). Therefore, this chapter starts with a discussion of philosophical considerations, and then justifies the methodological choices made in the current research, including research strategies, and finally concludes with a discussion of the research methods.

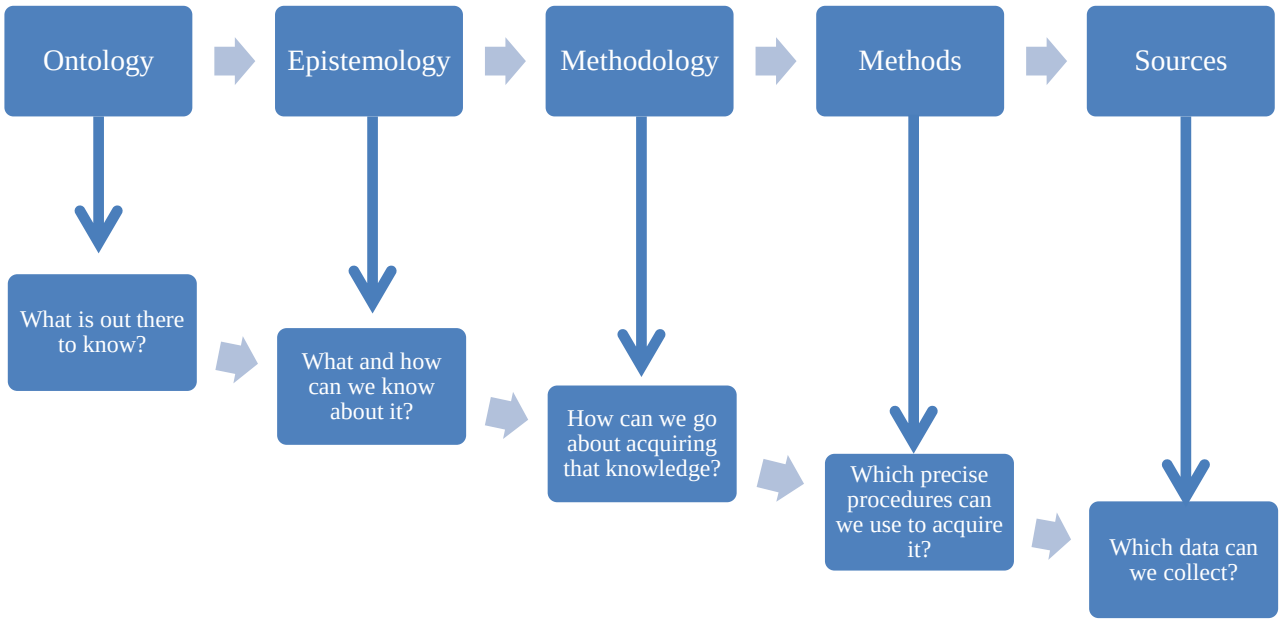

Figure 8: The interrelationship between the building blocks of research
Note. From: Hay (2002)

3.2 Ontological assumption: Depth realist

As outlined in the previous section, the philosophical assumptions of research include ontological and epistemological assumptions. Bryman (2008) described *Objectivism* and *Constructionism* as the main ontological positions. Objectivism refers to the view that the meanings of social phenomena have an existence that is independent of social actors. This means researchers are external from social phenomena that are beyond the influence of their actions. The opposite position, constructionism refers to social phenomena postulating that their meanings are continually being co-constructed by social actors. This means social phenomena are not only produced through social interaction but that they are in a constant state of revision. Schuh and Barab (2008:71) cited Lakoff (1987) who said that there is another form of objectivism called *Realism* (particularly known as critical realism). It shares with objectivism the point of view that real existence is external and includes human experience. Schuh and Barab (2008) also claimed that the differences between these ontological positions are that reality is separated from social actors' perception and the mind (Mackay, 1997; Reber, 1995), and knowledge (or truth) is produced when there is correspondence between the structures of the mind and what the present world is (Prawat, 1995).

The ontological assumption of the current research takes the realist point of view that there is an independent reality which exists independently of social scientists. More precisely, the *depth realist* stance is taken into account. Consistent with this form of realism, Dobson (1999) described that social actors may hold an ontological stand-point that social objects exist externally but cannot be directly observed. They may also hold a position that the world is unintelligible due to how it is simply constructed by social actors. Therefore, Blaikie (2009) concluded that reality in this case has ontological depth and is stratified. It comprises three domains: it ranges from what can be observed (empirical domain), through to what exists independently of the observer (actual domain), to an underlying domain of structures and

mechanisms that may not be readily observed (real domain). Bhaskar (1979) proposed these are three domains of critical realism: *empirical*, *actual*, and *real* (See Table 2).

Table 2: Area of study based on the ontologies and domains of critical realism

	Domain		
Ontology	Real	Actual	Empirical
Mechanism	*		
Event	*	*	
Experience	*	*	*

Note. * Indicates a legitimate are of study
Note. From: Wainwright (1997), Bhasker (1997), & Blaikie (2009)

Marketing and consumer behaviour-related researches is normally grounded in the category of objectivist ontological assumptions; because this assumption describes that social phenomena are external and can be seen as regulations or mechanisms which are able to control many social actors' behaviours (Thompson, et al., 1989; Palmer, 2010; Schembri & Sandberg, 2011). The assumption here is that reality is objective. A good example of this is addressed by Schmitt (1999) when he states that traditional marketing presents an engineering-driven, rational, analytical view of customers, products, and competition which is characterised by untested relationships and outmoded. The assumption of this marketing approach is that consumers are rational decision-makers who care about objective functional features and benefits of product or service. However, Palmer (2010), Schembri and Sandberg (2011) noted that research in marketing and consumer behaviour (i.e., focusing on especially consumer experience related issues) is moving towards constructionism due to the subjective nature of consumer experiences. In other words, consumer experience is a social phenomenon but with influential underlying structuring mechanisms of consumer behaviour. Therefore, an objectivist ontological position cannot be fully supported, and a realist ontological position seems more appropriate (Thompson, et al.,

1989; Schmitt, 2011; Walls, et al., 2011). The current research's philosophical stance goes beyond the realist ontological position and includes a subjective ontological depth. From the empirical to the actual domain, the opinions of the spectators' experience in Taiwanese professional baseball games are discovered so as to describe and understand the meanings of the concept of consumer experience, and ordinary and extraordinary experiences in particular. Between the actual and the real domain, the relationships between consumer experience and consumer behaviour cannot be directly observed, but the underlying regularities and mechanisms can be identified.

3.3 Epistemological assumption: Neo-realism

Blaikie (2009) described that six types of epistemological positions are commonly used in social research (i.e., empiricism, rationalism, falsificationism, neo-realism, constructionism, and conventionalism). He suggested that there are some sets of ontological and epistemological assumptions which are commonly combined together. However, any combination is possible to implement as long as the assumptions are consistent. The ontological assumption of the current research is depth realism and then neo-realism is adopted by the current research as the epistemological assumption. Blaikie (2009:94-95) explained that neo-realism takes the stand point that the structures and/or mechanisms produce the knowledge of the causes which can be observed from regularities. Necessitating the assumption or selection of entities and processing that go beyond surface appearances are important for discovering the structures and/or mechanisms. This type of causation view takes account of the possibility that competing or cancelling mechanisms may occur if there is no event or change is observed.

The relationship between service quality, consumer satisfaction, and loyalty are commonly observed and studied. Although the relationships have been widely validated by many studies (e.g., Bitner, 1990; Cronin Jr., et al., 2000; Dabholkar, et al., 2000; Fullerton, 2003; Carlson &

O'Cass, 2010), they are not automatic and sometimes remain unclear (Oliver, 1980; Fornell, 1992; Tam, 1999; Koo, et al., 2009; Theodorakis, et al., 2013). This phenomena show that some causeal effects are not competely addressed and the current structures and/or mechanisms are not fully discovered. Yoshida and James (2011) noticed that and tried to discover other possibile factors to assess service quality and also seek the improvement of evulating the relationships. According to the suggestion which is made by Kao, et al. (2007), MacInnis and Folkes (2010), and Same and Larimo (2012), consumer experience is highly correlated to consumer behaviour. It could be an antecedent variable of consumer satisfaction and loyalty (e.g., Yoshida & James, 2010; Garg, et al., 2011; Walls, et al., 2011; Lee & Chang, 2012). Moreover, the current research agrees that discovering the structures and/or mechanisms (i.e., the relationships between service quality, consumer satisfaction, and loyalty) needs to go beyond surface appearances and necessitates the assumption or selection of entities. For instance, Schmitt (2003) advocated that traditional marketing theories cannot explain the relationships between customer satisfaction and customer loyalty. It is because traditional marketing assumes consumers are rational and only focuses on produce or service features and functions. Experiential marketing could provide a better understand for the relationships because this marketing strategy does not only care about product or service, but also is a customer-focused strategy (i.e. consumers are seen as rational and emotional decision makers).

3.4 Research Paradigms: Critical realism

Wainwright (1997) explained that there are three major ways of approaching knowledge in terms of research paradigms: *Positivism*, *Realism*, and *Interpretivism*. In the positivism paradigm, knowledge about the social world can be obtained objectively. Alternatively, the interpretivism paradigm represents the opposite philosophical position to positivism, and holds that the social world cannot be perceived in straightforward fashion because it is constructed by everyone and

in different ways. In other words, positivism takes the objectivism ontological position, but interpretivism is in line with constructionism. In constructionism, everyday knowledge is the outcome of social actors' encounters which come from their physical world and other social actors. Scientific knowledge refers to the outcomes which are explained and formed by everyday knowledge which are turned into technical language by social scientists (Blaikie, 2009). However, the current research disagrees with some constructionist standpoints in their assertion that there is no permanent knowledge that can be seen as a true account. Although an external world can be understood in terms of concepts, theories, background knowledge and past experiences, there exists a true account behind them.

One limitation of positivism is that it is difficult to apply it to both natural sciences and social sciences in the same way where causal explanation is concerned (Wainwright, 1997). Therefore, social realism (also so-called critical realism) is another contemporary research paradigm which partly shares the stance of positivism. Cruickshank (2003a) claimed that critical realism asserts that the study of the social world should be concerned with the identification of the structures that generate it. Also, they do not share the positivist point of view that variables are able to reflect the facts and that correlations between variables can always be seen as causal relations. Critical realists accept that there are some distinctions to be made between social and natural sciences. For them, research is an ongoing understanding process of obtaining knowledge of a reality which exists independently of our description of it and is socially mediated but not socially determined. Blaikie (1993) explained that science is concerned with what kinds of things there are and how these things behave. It is concerned with an existing reality which may not be observable. Critical realism claims that the entities, states, or processes described by theories really do exist and those theories are either true or false; science aims to discover the truth about how the world behaves. In other words, critical realism is focused on understanding how social theory works and how social actors should work with it (López, 2003:75). Crickshank (2003a) indicated that critical realists believe variables are conceptual interpretations and that

correlations are descriptions rather than causal explanations. Thus, critical realism holds that there are kinds of structures, mechanisms, powers, and tendencies behind the facts that shape them. For critical realist, the real domain is emphasised, which contains key facts that cannot be directly observed and usually includes an inside value of events such as structures, mechanisms, powers and tendencies. Generally speaking, Lawson (1994) concluded that the core feature of critical realism is that objects can not only be observed on an empirical level, but can be explored from the actual and the real levels which reveal the mechanism behind the objects. Table 3 demostrates the methodological assumptions of Positivism, Realism, and Interpretivism.

Therefore, the current research considers that the process of developing everyday knowledge into scientific knowledge takes place from the empirical domain to the actual domain. A real domain under the empirical and actual domains is where the underlying structures or mechanisms exist. On one hand, knowledge is the outcome of underlying structures or mechanisms which can be obtained by identifying regularities in this domain. This epistemological assumption is called Neo-realism (Blaikie, 2009). The current research also accepts that knowledge of reality, which includes human action, is socially constructed by social actors. Moreover, Dewey (1925) described that knowledge is one part of an individual's experience with the world. Apart from intellectual determinations which result from knowledge, individuals also have sensory perceptions, feelings, and actions which result from experiences (Schmitt, 2011). Thompson, et al. (1989) claimed positivism, which seeks and addresses the "truth value" of statements (Pepper, 1942), is the dominant paradigm in marketing and consumer research. However, Schmitt (2011), and Schembri and Sandberg (2011) believed that more and more studies move beyond the dominance of positivism and toward an interpretive account of consumer-focused variables across a variety of research topics (e.g., consumer experience and service quality). For example, symbolic interactionism (e.g., Armstorng, 1999; Flint, 2006), ethnography (e.g., Brown, et al., 2003; Girod, 2005), hermeneutics (e.g., Hatch & Rubin, 2006; Lowe, et al., 2005) and phenomenology (e.g., Thompson & Troester, 2002; Svensson, 2007). It is

because of this that traditional marketing and consumer research has had a very limited view which typically follows an objective rather than subjective perspective and thus considers consumers to be rational thinkers (Grundey, 2008). Although the concept of consumer experience is usually referred to as an objective meaning in marketing and consumer research, Hoch and Dighton (1989) suggested that the interactions between consumer and products or services cannot be simply seen as the matters of discovering objective truths. It is more important to treat the concept of experience as an internal subjective episode, which contains emotional and sensorial elements, in the construction or transformation of the individual (Grundey, 2008:138). As Schmitt (2011) suggested, marketing researchers who focus on consumer experience related issues, may propose that there are different types of consumer experiences that can be empirically distinguished and measured. Empiricism is one of the common epistemological assumptions considering that knowledge comes from social actors' experiences (Driscoll, 2005; Ertmer & Newby, 1993; Gardner, 1985; Reber, 1995; Traiger, 1994). However, consumer experience contains some distinguishing characteristics which are reflective, personal, and subjective (Palmer, 2010). The second purpose of the current research is to discover the underlying mechanisms influencing the role of consumer experience on service quality, consumer satisfaction, and loyalty. This is because social structures are not fully independent from the activities, and influence social actors' concepts and behaviours (Blaikie, 2009). The current research has to establish an operational definition of consumer experience, especially in the context of Taiwanese professional baseball games, from individual (spectators) so as to improve the knowledge about consumer experience, and to be able to integrate this concept into a theoretical model. Therefore, the current research adopts neo-realism as the main epistemological assumption, in order to accommodate the subjective characteristics of consumer experiences.

Table 3: The methodological assumptions of Positivism, Realism and Interpretivism

Methodological assumptions	Positivism	(Critical) Realism	Interpretivism
Ontology (Nature of reality)	1. Researchers and reality are separate. 2. Fixed, stable, observable, measurable	1. Researchers and reality are separate, but also connected. 2. Multiple realities based on socioeconomic, political and cultural basis.	1. Researchers and reality are inseparable. 2. Multiple realities, socially constructed by individuals.
Epistemology (Knowledge)	1. Objective reality exists beyond the human mind. 2. Gained through scientific and experimental research and quantifiable 3. Natural science model 4. Objectivist, Dualist	1. Positioned between positivism and interpretivism. 2. Generated through ideological critiques of power, privilege, and oppression. 3. Natural and social science model 4. Subjectivist, interactive	1. Knowledge of the world is intentionally constituted through a person's lived experience. 2. Gained through understanding the meaning of the process. experience 3. Social science model 4. Subjectivist, interactive
Methodology (Research strategies)	1. Nomothetic, experimental, manipulative 2. Descriptive (correlational), causal comparative, and experimental research.	1. Ideographic, participative, transformative 2. Both quantitative and qualitative method.	1. Ideographic, hermeneutical, dialectical. 2. Qualitative (e.g. phenomenology, ethnography, cause study, grounded theory)
Research Object	Research object has inherent qualities that exist independently of the researcher	Research object includes both attributes of positivism and interpretivism.	Research object is interpreted in light of meaning structure of researcher's lived experience

Note. From: Weber (2004), Bryman (2008), Thomas (2009), Sparkes (1992), Grix (2002), Carr & Kemmis (2003).

3.5 Research Strategies: Retroductive strategy

The current research adopted depth realism as its ontological position and neo-realism as its epistemological position. After the philosophical assumptions are asserted, the next part of this chapter deals with research strategy. Blaikie (2009) described that *research strategy* is a set of possibilities, which offers a logical route for answering research questions. Blaikie (2009) described that there are four research strategies commonly seen in social researches: *Inductive*, *Deductive*, *Retroductive*, and *Abductive* strategy. Blaikie (2009) explained that *Retroductive strategy* is able to reveal underlying mechanisms in the researcher‘s interest context, so as to explain the regularities which are observed. This strategy is a process of producing assumed phenomena to create hypothetical models of structures and mechanisms. These models are tested by the characteristics of the research context and the consideration of possible contending mechanisms in order to provide an adequate description of regularity. Blaikie (1993), Danermark, et al. (2002) and Ryan, et al. (2009) explained that the retroductive strategy, which is usually adopted by critical realists, has been discussed by philosophers for a long period of time. It is based on a cyclical or spiral process instead of a linear logic, and has been advocated in both the natural and social sciences. It is a type of reasoning strategy which observes rules and results in order find out the real reason behind unusual events. This strategy involves the construction of hypothetical models as a way of uncovering the real structures and mechanisms which are assumed to produce empirical phenomena. He also advocated that a retroductive strategy is more appropriate for social research, when it takes depth realist ontological assumption and neo-realism epistemological assumption. Table 4 shows the logic of retroductive strategy.

The main purposes of the current research are: 1) to explore the operational definition of consumer experience in Taiwanese professional baseball games, 2) to evaluate the relationships between consumer satisfaction and consumer loyalty in Taiwanese professional baseball games by using both service quality and consumer experience as predictors. Blaikie (2009:87)

suggested that the first stage of retroductive strategy is to supply a sufficient description of regularity. Thus, the first part of the current research is to discover what the specific contexts (the observed regularity) are, and how they work in Taiwanese professional baseball games. These regularities and contexts are able to help the research to construct a model in order to explain the social phenomena by testing the hypothetical assumptions of the model. Therefore, the second part of the research is to review the relationship between consumer satisfaction and consumer loyalty in terms of using consumer experience and service quality as two predictors. This part of the current research is to discover the role of consumer experience on consumer behaviour in terms of whether the mechanism of consumer behaviour (i.e., consumer satisfaction and loyalty) is able to be described more clearly. According to the perspective which is claimed by Blaikie (2009:89), the second stage of the current research tests a hypothetical model of existing social phenomena and the relationships between constructs of the current research in order to establish and explain some regularities or mechanisms in the social context (i.e., consumer behavior).

Table 4: The logic of retroductive strategy

	Retroductive strategy
Aim	To discover underlying mechanisms to explain observed regularities
Ontology	Depth or subtle realist
Epistemology	Neo-realism
Start	Document and model a regularity and motives; Describe the context and possible mechanisms
Finish	Establish which mechanism(s), provide(s) the best

3.6 Research Method and sources: Mixed Method

There are three common types of research methods：*Quantitative*, *Qualitative*, and *Mixed*. Quantitative research methods typically use numbers rather than words. Researche which adopts this type of method usually follows a deductive research strategy and is associated with the positivist paradigm. It is therefore often linked to natural sciences. Qualitative research methods use words rather than numbers. Research which adopts this type of method usually follows an inductive strategy and is associated with the interpretivist paradigm, which assumes that the world is socially constructed. Mixed methods research combines quantitative and qualitative methods. Both quantitative and qualitative research methods can be argued to have their own specific weaknesses (Chamberlain, 2006). Johnson and Onwuegbuzie (2004) explained that a mixed research method can produce more complete knowledge necessary to inform theory and practice. This research method is a multiple approach to answer different questions and match the usage of the pragmatic method and philosophical position. This could include discovering patterns (induction), testing of theories and hypothesises (deduction), and uncovering and relying on the set of explanations (abduction). In other words, mixed method research combines the advantages from quantitative and qualitative research method, and possibily suitable for many types of research strategy. Downward and Mearman (2007) suggested that mixed methods is more useful when the research adopts a retroductive strategy. Based on the literature review, there is strong evidence that consumer experiences have unique characteristics, which mean every experience is different, and various meanings from different viewpoints. Although the concept of experience in commercial activities has been discussed for a long time, the distinction between ordinary and extraordinary experiences in spectator sport events is not very clear. Therefore, the first issue of the current research will be to clarify what is meant by ordinary and extraordinary experiences in Taiwanese professional baseball games from a spectator’s point of view. When the boundary of ordinary and extraordinary is identified and the consumer

experience specific contexts is confirmed, it will then be possible to focus on the model construct (i.e., the relationships between consumer experience, service quality, consumer satisfaction and loyalty), model comparison in terms of specific contexts and ordinary and extraordinary experiences.

Bryman (2008) identified eighteen reasons why quantitative and qualitative methods should be combined and two of them mainly justify the use of mixed methods for the current research：the first reason is that mixed research methods allow the researcher to answer different research questions. Before investigating the relationship between consumer experience, service quality, consumer satisfaction, and loyalty, the nature of the experiences provided by professional sport organisations should be discussed first so as to define which experiences are classified by spectators as ordinary and which ones are classified as extraordinary in Taiwanese professional baseball games. This is because the notion of consumer experience is complex and vague. It will be more difficult to conduct research if the understanding of consumer experience in this specific research context is insufficient. Therefore, qualitative research methods are used in the current research to acquire a deeper understanding of the nature of consumer experiences in Taiwanese baseball games as well as the factors or dimensions which lead them to be categorised as ordinary or extraordinary. Moreover, the current research aims to identify the impact of extraordinary experiences on consumer behaviour by implementing a quantitative research method. This result will help sport organisations' marketers to identify the most influential and beneficial experiences, and consequently the most appropriate settings and contexts to increase consumer satisfaction and loyalty. The second reason to use mix-methods is to develop a new instrument. Some scholars (e.g., Schmitt, 1999; Kim, et al., 2011) have spent a long time developing measures of consumer experience for use in future research on behaviour using the concept of consumer experience. Palmer (2010) identified several challenges and solutions for consumer experience research to reduce the influence of individual and situational factors on measuring consumer experience. For instance, a multi-dimensional scale can help to distinguish

which components of consumer experience are the most significant factors in influencing consumer behaviour. However, a robust instrument is not easy to develop due to the inclusion of context-specific items or factors.

Given this challenge, the current research tried to develop a multi-dimensional scale, which is based on the foundational instrument provided by Schmitt (1999) for marketers and/or researchers interested in experience issues in commercial sectors, for Taiwanese professional baseball games. Meanwhile, the current research can be regarded as a sequential study using mixed research methods (Hsieh, 2007). The research focuses first on qualitative methods, and then integrates the main outcomes of these into the quantitative stage. The relationships between consumer experience, service quality, consumer satisfaction and loyalty are then tested under the influence of experiential marketing strategies via a quantitative research method. Several empirical studies with similar research aims and objectives also adopted a mixed research method design. For instance, Kaplanidou and Vogt (2010) tried to define the meanings and develop a measure of sport event experiences among active sport tourists. Two focus groups were used to understand the meaning associated with and features of the research context. After this qualitative approach, a multi-dimensional scale was developed based on specific attributes and used to provide a measure of consumer experience in this particular context. As discussed in previous sections, the current research tried to acquire a better understanding of consumer experience in CPBL in order to satisfy the first set of aims and objectives. In order to determine how spectators define their experiences in CPBL games, focus groups were conducted with various clubs' spectators. More details of the qualitative research stage are discussed in Chapter 4. The second part of the current research aims to examine the role of consumer experience in the relationships with service quality, consumer satisfaction and loyalty in CPBL. The research design adopted in the quantitative approach, which relied on a questionnaire surveying CPBL live spectators, was based on the main findings of the qualitative stage. More details about the quantitative research design are discussed in Chapter 5.

CHAPTER 4: Qualitative Approach

4.1 Introduction

The first aim of the current research is to identify what consumer experiences are in Taiwanese professional baseball games. According to the literature review, it is important to distinguish what kinds of consumption experience (ordinary or extraordinary) are delivered by products or services and what specific contexts of consumer experience exist in the research context. Therefore, two objectives should be addressed in terms of first aim of the current research: The first objective is to identify what ordinary and extraordinary consumer experiences are in the Taiwanese professional baseball games. Based on the discussion of 2.3.3, sport spectating is a typical event which has creating extraordinary experiences as its main purpose. However, the boundary between ordinary and extraordinary experiences is still blurred. Many events (or activities) are provided by clubs during the game, but they have not been distinguished as ordinary or extraordinary experiences. The boundary will help club marketers to organise marketing activities in order to seek extraordinary experiences. The boundary can also be a key factor in assessing the role and influence of consumer experience on the relationships between service quality, consumer satisfaction, and loyalty. Moreover, Schmitt (1999) explained that experiences are similar but it is unlikely to be completely the same. Lundberg (2007: 187) also described that spectators usually expect specific experiences from the game and other aspects during their spectating. Rifkin (2000) proposed that marketer should only be interested in the experiences which link with the market-oriented specific context activities. In other words, every experience is unique when they are influenced by different events, industries, and individuals. There is something specific which makes consumption experience unique. Thus, the second objective is to discover the specific context of consumer experience in the Taiwanese

professional baseball games. In order to achieve the first set of aims and objectives, this stage followed a qualitative approach. There are only four active clubs in the CPBL. Thus, the qualitative stage involved four focus groups (one for each club) so as to gain a better understanding of consumer experience, especially the boundary of ordinary and extraordinary experiences, and the specific contexts in Taiwanese professional baseball games. This chapter demonstrates the background of the CPBL and how the focus groups were conducted and what knowledge was gained from them.

4.2 Background of CPBL

The CPBL is the only professional sports league in Taiwan. It was founded in 1989 by the Hung family, who were very successful in the Taiwan hotel industry. There were only four clubs (Brother Elephants, Mercuries Tigers, Wei Chuan Dragons, and Uni-President Lions) in the league when the league was founded by the Brother hotel's chairman Teng-Sheng Hung (Wang, et al., 2011). The three other clubs then joined, three clubs withdrew, and one expansion and one league merger took place during the last 23 years. The first of these was in 1993, when the Chinatimes Eagles and the Jungo Bears (Sinon took over the club in 1996 and changed the club name to Sinon Bulls) joined the league. The turning point of professional baseball's development in Taiwan was between 1996 and 1997. The 7th club, the Chinatrust Whales joined the league in early 1997. However, the Chinatimes Eagles were suspended in the same year because of gambling and game-fixing scandals. After that, the development of professional baseball it was stalled by the shadow of corruption. Meanwhile, Naluwan Corporation tried to establish another professional baseball league called Taiwan Major League (TML) in order to compete with CPBL in the same year. The pressure of managing a club increased dramatically. The high level of competition between the two leagues did not last for long. Mercuries Tigers and Wei Chuan Dragons withdrew from the CPBL in 1999 due to long term deficits and a series of gambling and

game fixing scandals. Naluwan Corporation collapsed and signed a merger agreement with the CPBL after six years of competition. The merger brought two clubs into the CPBL: Agan (La new Corporation took over the ownership in 2003) and Gida (D-media System Corporation brought the ownership from Macoto Bank in 2008). Once again, gambling and game fixing scandals occurred and the club management team of D-media T-REX was involved. The club was immediately expelled and Chinatrust Whales withdrew as a result of that incident. There have only been four active clubs in the league since the 2009 season: Brother Elephants, Lamigo Monkeys (La New Bears changed their club name and moved to a new city in 2011), Sinon Bulls and Uni-President 7-Eleven Lions (The club name of Uni-President Lions was changed because of the company's subsidiary and 7-Eleven was designated as the club's main sponsor in the corporation group). Table 1 lists the full name, logo, and location of the leagues and clubs.

Considering the weather conditions, most baseball leagues in the world start the season from March and end it in October. The CPBL season usually runs from March to September, and post-season is usually held in October. The current season structure is comprised of two half seasons and each club plays 60 games in each half season (120 games in total for each club in one full season). If the first and second half season championship club is the same, the clubs with the 2nd and 3rd highest overall winning percentages contest the CPBL playoff series (using a best-of-five rule). The winner of the CPBL playoff series then qualifies for the CPBL Taiwan series to contest the championship of the season (also using the best-of-five rule). If the champions of the 1st and 2nd halves of the season are different, the two clubs go directly to the CPBL Taiwan Series. There are four active clubs in the league. Brother Elephants was founded in 1990 and the club headquarters are located in Taipei area - which includes Taipei and New Taipei city. The club uses Tienmu and Hsinchuang stadium as its home stadia. Lamigo Monkeys was established in 2003, but the club name, mascot and home stadium were changed in 2011. The club is currently situated in Taoyuan city and uses Taoyuan international stadium as the home base. Sinon Bulls was started in 1996 and picked Taichung city as the home city. The club

has two home stadia: Taichung (old) and Taichung international (new) stadium. Finally, Uni-President 7-Eleven Lions originated in 1990 and chose Tainan for its the home city and stadium. Table 5 demonstrates the basic information of the CPBL and its clubs.

Table 5: Basic information of the CPBL and its clubs

League/club name	Logo	Year Founded	Main Stadium (Location)
Chinese Professional Baseball League		1989	CPBL Headquarters (Taipei)
Brother Elephants		1990	Tienmu Stadium (Taipei) Hsinchuang Stadium (New Taipei City)
Lamigo Monkeys		2003	Taoyuan Int'l Stadium (Taoyuan)
Sinon Bulls		1996	Taichung Stadium Taichung Int'l Stadium (Taichung)
Uni-President 7-Eleven Lions		1990	Tainan Stadium (Tainan)

Chen (2009) described that there are two major marketing strategies which are commonly used by CPBL clubs. The first main strategy involves focusing on sponsorship. Clubs try to create more opportunities for other companies to sponsor clubs. For instance, Brother Elephants offers blimp advertising, player endorsement, advertisement on player uniform, theme nights, on-site signage, and so on for sponsors to support the club. Sponsorship becomes one of main revenues for clubs. The management and administrative rights of the stadium is another strategy for clubs to obtain support from local spectators so as to enhance their level of consumer satisfaction. The home/guest team in the CPBL is presumed, which means any team can be the home or guest team in any stadium. However, each club subscribes to the stadiums nearby to its headquarters and tends to arrange more home games in the respective stadium. However, not every club invests resource on their home stadium. For example, the Brother Elephants' headquarter is located in Taipei. The club uses the Tienmu and Hsinchung stadiums in Taipei and New Taipei city as their main stadiums. The club does not obtain the management and administrative right which mean the club cannot refurbish the stadiums so as to create a better environment of the games. On the other hand, Lamigo Monkeys spent 13 million NTD (equal to £275,200) for acquiring the management and administrative rights and maintenance. Uni-President 7-Eleven Lions spent 73.28 million NTD (equal to £1,559,000) for five years management and administrative rights (Lin, 2012).

Horng and Sun (2009) concluded that the marketing strategy of each CPBL club is highly dependent on the scale of the parent company and the level of aspiration for investing in the club. Especially in the case of Uni-President 7-Eleven Lions, Sinon Bulls and Lamigo Monkeys, promotional strategy is integrated with the parent company's marketing activities. For instance, the parent company of Lions, Uni-President, used the franchise convenience store in the business group, which is called 7-Eleven, to sell exclusive championship merchandise and have discount for all goods for celebrating the Lions' championship win in 2008. Brother Elephants is the only club that designs and runs its own marketing strategy. Horng and Sun (2009) also indicated that

apart from the regular marketing activities, the promotion strategy of each club is mainly focused on event marketing. This is because that promotion strategy has to match up the performance of club, or special occurrences. For Brother Elephants, the promotion strategy is based on regular activities and combines with other occasional events. Table 6 illustrates events which are provided by Brother Elephants. For Sinon Bulls (Table 7), the promotion strategy of the club is combined with “Taiwan fresh supermarket” which is a subsidiary of Sinon group. In other words, Sinon group uses the club and the players as one of promotion tool. Table 8 showed more promotion strategy of Sinon Bulls. For Uni-President 7-Eleven Lions is demonstrated in Table 9.

Table 6: Events which are provided by Brother Elephants

Brother Elephants

Basic events (Regular activities):

1. *Fans' club*: The fans club organises the cheer band for each game.

2. *Songs for each player*: A special song is played by the cheer band when a certain player is batting.

3. *Baseball camp*: The club organises baseball camps for elementary school students and famous players teach them how to play baseball. Usually these are disconnected from the games.

4. *Birthday Party*: The club holds a monthly birthday celebration for fans before the game.

Table 6: Events which are provided by Brother Elephants (continued)

Other events (Non-regular activities):

1. *Stadium visit*: If any group would like to visit the stadium, the club will arrange it and a guide and some players will introduce them to the stadium.

2. *Record celebration*: The club will hold a special event after the game when a player reaches a record

3. *Theme day (Sponsor)*: a series of special events which are arranged by the sponsor during the games.

4. *Family day*: Family day is when players play baseball with children and parents before the game.

Note. From: the current research, the offical website of Brother Elephants[1]

[1] http://www.brothers.com.tw/

Table 7: Events which are provided by Sinon Bulls

Sinon Bulls[2]

Basic events (Regular activities):

1. *Fans' club*: The fans club organises the cheer band for each game.

2. *Promotion activities*: Players support marketing activities which are arranged by the parent company. Usually these are disconnected from the games.

3. *Baseball camp*: The club organises baseball camps for elementary school students and famous players teach them how to play baseball. Usually these are disconnected from the games.

4. *Theme day (Sponsor)*: Players go to special events to have fun with people. Usually these are disconnected from the games.

[2] Sinon Bulls was sold to E-United Group after 2012 season. The club name was changed to EDA Rhinos and used Kaohsiung as its home city.

Table 7: Events which are provided by Sinon Bulls (continued)

Other events (Non-Regular activities):

1. *Camp tours*: Usually these are disconnected from games.

2. *Record celebration*: The club will hold a special event after the game when a player reaches a record.

Table 8: Events which are provided by Uni-President 7-Eleven Lions

Uni-President 7-Eleven Lions

Basic events (Regular activities):

1. *Fans' club*: The fans club organises the cheer band for each game.

2. *Songs for each player*: A special song is played by the cheer band when a certain player is batting.

3. *Baseball camp*: Usually these are disconnected from the games

4. *Mascot and cheer squad*: The club has a family of mascots and a cheer squad for home games. They usually perform during the game.

Table 8: Events which are provided by Uni-President 7-Eleven Lions (continued)

5. *Theme day (Sponsor)*: The club has strategic alliance with different business sectors, and these organise special events during the game.

6. *Theme day (Club)*: The club has strategic alliance with different business sectors, and these organise special events during the game.

Other events (Non-Regular activities):

1. *Campus tour*: Usually these are disconnected from the games

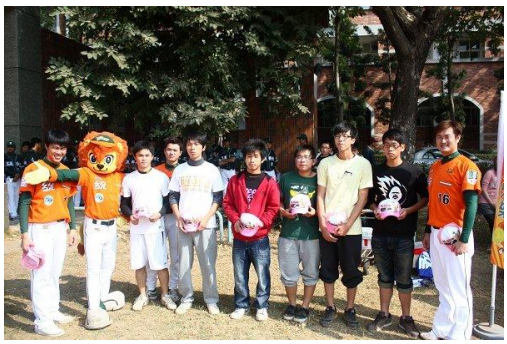

2. *Record celebration*: The club will hold a special event after the game when a player reaches a record

3. *Special Guest: opening pitch*: The club invites a celebrity to give the first pitch of the game

Table 9: Events which are provided by Lamigo Monkeys

Lamigo Monkeys[3]

Basic events (Regular activities):

1. *Fans' club*: The fans club organises the cheer band for each game.

2. *Cheer squad*: Usually these are disconnected from the games

3. Songs for each player: A special song is played by the cheer band when a certain player is batting.

Other events (Non-Regular activities):

1. *Campus tour*: Usually these are disconnected from the games

2. *Record celebration*: The club will hold a special event after the game when a player reaches a record

[3] Lamigo Monkeys changed its home city, mascot and club name at the end of 2010, but the staffs of the club are the same. The previous name was La new Bear in Kaohsiung city.

Table 9: Events which are provided by Lamigo Monkeys (continued)

3. *Baseball camp*: Usually these are disconnected from the games

6. *Theme day (Sponsor)*: The club has strategic alliance with different business sectors, and these organise special events during the game.

7. *Theme day (Club)*: The club has strategic alliances with different business sectors, and these organise special events during the game.

8. *Fireworks*: When the club wins a game, there are fireworks after the game to celebrate

9. *Special Guest: opening pitch*: The club invites a celebrity to give the first pitch of the game

4.3 Qualitative research method: the focus groups

From a marketing research standpoint, Hill and Alexander (2000) claimed that depth interviews or focus groups are similarly useful ways to improve the understanding of all aspects of the relationship between customer and product or service providers. These authors also indicated that the outcome of depth interviews might be inconsistent between participants. Morgan (1997:17) explained that when the focus group method is combined with other research methods, it can offer an initial stage of research in a bigger research project. Meanwhile, interviewees may feel pressure when they are asked in a one-to-one environment (Kelly, 2007). Krueger and Casey (2000) explained that a focus group has a more focused discussion because the participants have a lot of opportunities to discuss or share their ideas. Focus groups enable the researcher to access a broader range of feelings that come from the participants with more effectiveness than in-depth interviews. The range of topics can be covered in a shorter period of time in order to save time and money (Kelly, 2007). Krueger and Casey (2000) also suggested that conducting a focus group provides valuable insights for the researcher who would like to implement a quantitative study. It can help in discovering the factors which influence spectators' attitudes and behaviours to build a complete quantitative research instrument. Moreover, the results from the focus group are not only useful in quantitative research, but can also serve as a reference from which to further explain the findings of the quantitative data analysis. The current research tried to classify all consumer experience into the categories of ordinary and extraordinary experiences. Although Abrahams (1986), Arnould and Price (1993), Pine and Gilmore (1999), and Montonen and Tanski (2004) emphasised that the concept of consumer experience is flexible and can be seen as a spectrum, the boundary between ordinary and extraordinary is needed to help marketers to identify what events (or activities) are likely to create extraordinary experiences. In other words, the focus groups in the current research are for categorising spectator (consumer) experiences. Specific contexts of spectator (consumer)

experience which are perceived by spectators during Taiwanese baseball games are also demonstrated by implementing focus groups in order to provide more information for conducting quantitative approach.

4.3.1 Recruiting participants and conducting the focus groups

Tang and Davis (1995) described that it is not easy to decide how many participants is appropriate for a focus group. For instance, Floch-Lyon and Frost (1981) claimed that the ideal size is between 6 and 12 while Kitzinger (1995) believed it to be between 4 and 8. Therefore, the ideal focus group size is controversial and requires more discussion. Grover and Vriens (2006) claimed that focus groups typically comprise between 8 and 10 people who are screened on certain predetermined characteristics. Tang and Davis (1995) suggested that the size should also consider other factors such as, the number of questions asked, the allotted time for each question, the format of the focus group session and the duration of it. Whitlatch (2000) suggested that the ideal number of questions in one focus group is between 6 and 12 questions. On the other hand, Grover and Vriens (2006:63) suggested that focus groups should ideally not use more than 10 questions in order to be controlled within 90-120 minutes. Considering the budget and time consumption, each club had one focus group that was held in the club's home stadium city only (i.e., the headquarters of Brother Elephants is in Taipei area which includes Taipei City and New Taipei City. Thus, the focus group of Brother Elephants was only held in Taipei and participants come from this area). It is because the time and cost would be too high if the current research had sought to conduct focus groups for every club in each city that stages CPBL games. For instance, although each club uses one city as its headquarters, CPBL games are held in 8 to 10 cities. Thus, it would need 8 to 10 focus groups for each club and 32 to 40 focus groups in total are requested for the current research). Moreover, considering the positing of home and guest club in the games, most home clubs try to deliver more events (or activities) so as to create a "home atmosphere" for attracting the support of local spectators. Local spectators (consumers) have more opportunity to experience a complete spectator (consumer) experiences which are

delivered by the club then other spectators in other cities. Thus, each focus group was conducted in a commercial meeting room which is located in the home city of each club. Only 5-7 participants were targeted for each club's focus group by the current research. All participants were asked 8 major questions within about 100 minutes and the answers were recorded by recorder and a video camera.

Krueger and Casey (2000) said that it is easier to recruit a group of people for focus groups in terms of the considerations for homogeneity and segmentation, if there is a list of potential participants who could be understood as a target audience. However, the current research cannot acquire and recruit participants from a list (or database) of potential participants which is provided by official clubs. Although bias may appear during the selection process, searching for participants by using advertisements, announcements in Newspapers, posts on Bulletin Board System (hereafter referred to as BBS) or messages on the internet are good alternatives for the current research to recruit participants. All participants are volunteers to join the focus group, and the current research tried to avoid some human biases (i.e. selective perception on selecting participants) by controlling individual characteristics. A good example of that is how gender balance and age groups were supervised during the recruiting process. The number of participants targeted was between 5 and 7, which means that 6 was the median. Thus, 3 females and 3 males was the consideration for the gender balance issue. Participants who were less than 18 years old were excluded from focus groups due to the ethical issue. Other age groups were sought to be varied. Unfortunately, these biases cannot be fully averted. For instance, the younger age groups are heavy internet users in comparison with older age groups. The majority of participants were in the younger age groups. Although the current research tried to control the balance of gender (i.e., asking participants come as a couple which means one male or female participant can invite one female or male participant in order to keep the balance), male participants still dominated the focus groups. Consequentially, the range of occupation, marriage, income and other individual characteristics were also affected. Thus, content validity refers to

the adequacy with which the domain of the characteristic is captured by the measure (Churchill & Iacobucci, 2010: 256). The research tried to recruit participations with a variety of individual characteristics, such as gender, age, marriage, education and so on.

The Brother Elephants focus group was the first one to be held in Taipei City on 12th of February, 2011. The group was consisted of 5 male and 2 female participants (7 participants in total). Most of them were between 25 and 30 years old. Only one was over 35 years old and the youngest was 18 years old. Three of them are elementary teachers, two of them are secondary (senior high) school students, one housewife and one office worker. All of them have over 5 years of live experiences at Brother Elephants' games. Three of them attended every Brother Elephants home game in the 2010 season. The discussion lasted for 1 hour and 10 minutes. The second focus group was conducted with Sinon Bulls' supporters and was held in Taichung on 13th of February, 2011. 7 participants were scheduled but only 6 attended. The gender distribution was evenly balanced (3 Males and 3 Females) and all of them were between 22 and 28 years old. Three of them are office workers, one is university student, one is nurse, and one is unemployment. Three of them went to every Sinon Bulls home games in the 2010 season. All of them have supported the club for more than 5 years. The discussion lasted 1 hour and 20 minutes. The third focus group was Uni-President 7-Eleven Lions and was held on 19th of February 2011 in Tainan City. There were 4 male and 3 female participants (7 participants in total). Three of them are operator in electronic industry, two of them are post-graduate students, and two are office workers. All participants have supported Uni-President 7-Eleven Lions for more than 5 years and their age was between 25 and 30 years old. The discussion lasted for 1 hour and 20 minutes. The focus group for Lamigo Monkeys was the last one, and was conducted in Kaohsiung on 20th of February, 2011. 6 participants were university students, and their age was between 22 and 24 years old. The average length of support of the Laimgo Monkeys[4] was about 3 years because of the club's comparatively short history. The duration of the discussion was 1

[4] he original club name of Lmigo was La New Bears

hour and 15 minutes.

4.3.2 Developing the contexts of focus groups

As shown in Tables 8, 9, 10 and 11, there are many events which are organised by CPBL clubs. Although various events (or activities) deliver various types of experiences to spectators, some events (or activities) are disconnected from the games and independently organised in other places. These may influence spectators' behaviours and feelings about a club even though they are not directly linked to consumer experiences at the games. These influences may also affect spectators' attitudes (either positive or negative). Positive influences do not guarantee that spectators will buy tickets and go to the stadium for attending live games or supporting the club. In other words, these events (or activities), which are independently organised in other places, are more like supportive events (or activities) instead of being counted as part of the games. Therefore, the current research focused on the events (or activities) which are held during the games only.

Many scholars (e.g., Stein, 1977; Birrell, 1981; Voigt, 1980; MacAloon, 1984; Shaw, 2007; Tynan & McKechnie, 2009) claimed that experience stage includes pre-, during-, and post- game periods. Therefore, the first three questions are structured based on different game periods. For example, "before the game" encompasses experiences that take place from the spectators' arrival on site to the start of game as announced by the referee. "During the game" represents the period in which the game is being played, and "after game" corresponds to the 30 minutes after the game has finished (The code of conduct in the CPBL stipulates that any event held after the game should not last for longer than 30 minutes as all spectators should have left the stadium by then). The current research examined the spectators' experiences which happened during the regular season of the CPBL in 2010. The questions focused upon spectators' general impressions on their typical live game experiences rather than any special games such as warm-up games, all-stars games or post-season games. Table 10 shows 8 major questions that were asked during the focus groups. Questions No.1, 2 and 3 dealt with the special events during the different

stages of the game (i.e., pre-, during-, and post-). Question No.4 dealt with participants' feelings about the most special games that were organised in the 2010 season. Before question No.4 was discussed, the definition and the difference between ordinary and extraordinary experience were given to all participants. This question is a supportive question for double checking question No. 1, 2 and 3 in order to conform if any event (or activity) is missed and also to bring an extreme sample of extraordinary experience in CPBL. It is linked with question No. 5 which dealt with participants' opinions about the boundary between ordinary and extraordinary experiences. In other words, the main purpose of question No. 4 is to collect the most special, unforgettable (extraordinary) experiences, so as to distinguish the boundary which is the objective of question No. 5. Following the boundary between ordinary and extraordinary experience, question No.6 was an overall question about what types of consumer experience (ordinary or extraordinary) were perceived by the participants. This question helped participants to justify whether the club which they supported was providing more ordinary or extraordinary experiences. Question No.7 dealt with participants' attitudes about the fact that if the club is trying to provide events geared at promoting extraordinary experiences. This question aimed to establish a general trend (or attitude) from participants about the possibility of conducting experiential marketing. The feedback can correspond to the findings of the quantitative stage to check if it is consistent across two types of research stages. Question No.8 aimed to obtain where spectators are likely to meet extraordinary in the specific contexts of CPBL games. This question gives an idea for the current research to conduct quantitative research (i.e., sampling strategy, model comparison) in order to address the influence of consumer experience by comparing ordinary and extraordinary touch points.

The first three questions were written on the white board and participants were asked to brainstorm, in order to particularise all events during three time periods of CPBL games (i.e., pre-, during-, & post-) into a list in terms of their spectating experiences. Question No. 4 to No. 8 were open questions which participants were requested to recall their spectating experiences and

try to answer the questions in relation to the list. The list which was obtained from question No. 1 to No. 3 and all conversations were fully transcribed (see appendix 2). The transcript was simply analysed and summarized by pencil and highlighter to mark key words and statements. The conclusions and findings of focus groups are discussed in the next section.

Table 10: Main questions for focus group

	Question
1	What kinds of events are held **before the games** during the regular season?
2	What kinds of events are held **during the games** during the regular season?
3	What kinds of events are held **after the games** during the regular season?
4	In your opinion, what was the most special game of last season?
5	In your opinion, what were the ordinary experiences and extraordinary experiences during regular season games?
6	In your opinion, what types of experience does your club provide? (ordinary or extraordinary)
7	What would you think if your club tried to organise more extraordinary events around the games?
8	Are there any other extraordinary experiences that can be found during regular season games?

Note. From: the current research

4.3.2 The findings of the focus groups

According to the analysis, two main findings were identified from the focus groups. First of all, most participants claimed that the main reason why they attend CPBL live games is the game itself. Other events (or activities) which might or might not be arranged by clubs can be seen as extraordinary experiences (some participants described them as bonuses). However, one exception to this is when a player achieves a special record (i.e., the 100th hit is performed) or if a game determines a particular ranking position. In these circumstances, the game will become more extraordinary and special to spectators in its own right. Apart from game itself, most events (or activities) can be seen as the focus of extraordinary experiences in CPBL. Games can

therefore become more ‘extraordinary’ when there is the possibility of a special record or a ranking position being decided. This finding is consistent with that of Lanier Jr. (2008). According to his research data, it was described as that:

> *Both Jennifer and Nick state that the possibility of something extraordinary happening is one of attractions of going to a sporting event. Whether it is seeing a baseball player hitting a home run or a football player making an incredible play, experiential offerings provide consumers with a venue where the extraordinary can, and often does, occur,. While it is possible to encounter the extraordinary anywhere, these offerings increase the chances that consumers will encounter something extraordinary.*

Therefore, the nature of game can be changed by how spectators perceive it (either by making it more ordinary or extraordinary). Moreover, the focus group participants also mentioned that the level of extraordinary experiences can be increased by the clubs when more events (or activities) are arranged by them during pre-, during-, & post- game periods. In conclusion, the current research adopted the theory developed by Hagedorn-Rasmussen and Sundbo (2008) to describe the boundary between ordinary and extraordinary experiences of the CPBL. The boundary is a concentric circle which consists of three layers. The first layer is the “*core product or service experience*” which means the consumption experiences that come from core products or services. This category of consumption experiences belongs to ordinary experience, due to how these experiences are anticipated by spectators. For instance, CPBL spectators expect that 9 innings per game and other common circumstances (or rules) in baseball games will be delivered by players. The second layer is “*core experiences*” which refer to consumption experiences in relation to core product or service experience but are closer to extraordinary experiences. These are part of the first layer because consumers may perceive some stimuli which they do not anticipate during their consumption process of core products or services. For instance, it is rare that a single player delivers three home runs in one game. If this happens during a game, most spectators (aside from those supporting the opposing team) will perceive a higher level of

extraordinary experiences at the game. The last layer is "*peripheral experience*" which includes consumption experiences that belongs to extraordinary experience but not in relation to core products or service experiences. A good example of this is Lamigo Monkeys' fireworks show that is performed when the club wins a game at its home stadium. The show is not part of the game, but it can influence the level of extraordinary experience which is perceived by spectators. The boundary between core product or service experience and core experience is similar to the boundary between ordinary and extraordinary experience in that it is not fixed. The portion of core experience might be small due to the ingredient of extraordinary experience being thin. Moreover, peripheral experience can only be controlled by club marketers. The intensity of core experience is highly dependent on the game itself, but it is the best position for linking games and events with extraordinary experiences Figure 9 demonstrates the boundary between ordinary and extraordinary experiences in the CPBL. The current research suggests that if the clubs would like to provide more extraordinary experiences to spectators, peripheral experience should be the primary focus and core experience can be supportive activities for increasing it.

The second part of finding is about some specific contexts between ordinary and extraordinary experience in CPBL. The first specific context is that clubs can be segmented into two groups. In the first, Brother Elephants and Sinon Bulls are two clubs which tend to provide more ordinary experiences than extraordinary experience to spectators. In the second, Uni-President 7-Eleven Lions and Laimgo Monkeys are two clubs which try to provide more extraordinary experiences to spectators. For instance, both of them have a cheer squad and a mascot show. The Lions randomly arranged many events (e.g., BBQ party, theme day) during games and the Monkeys have home game victory firework shows or theme day parties. In terms of the participants' point of view, these two clubs provide more events than others during the games. Spectators who attend the Lions and the Monkeys games may perceive more extraordinary experiences than the other two clubs' spectators. In line with this, the current research compared two primary categories of clubs (i.e., Lions and Monkeys which represent extraordinary experiences clubs,

versus Elephants and Bulls which stand for ordinary experiences clubs). The second specific context is that there are big perceived differences between week and weekend games. Weekends have more events arranged by all clubs and more spectators attending for all games. Mondays are official holidays in the seasons. Tuesdays to Fridays are all working days for most Taiwanese people. Many spectators are unable to attend live games on working days unless their hours permit it. Finally, some participants mentioned that stadium is another important specific context. Their perceived experiences are different in each stadium. Even though one club can use different stadia for home games (i.e., Brother Elephants uses both Tienmu Stadium and Hsinchuang Stadium as home stadium), the atmosphere of games and consumer experiences can still be different. According to the findings, the current research developed more research hypothesises:

$\boldsymbol{H_7}$ There is a significant difference between **ordinary** and **extra-ordinary experience** in terms of providers' models

$\boldsymbol{H_8}$ There is a significant difference between **weekdays** and **weekends** in terms of providers' models

$\boldsymbol{H_9}$ There is a significant difference between **home stadia** in terms of providers' models

$\boldsymbol{H_{10}}$ There is a significant difference between **different stadia** in terms of providers' models

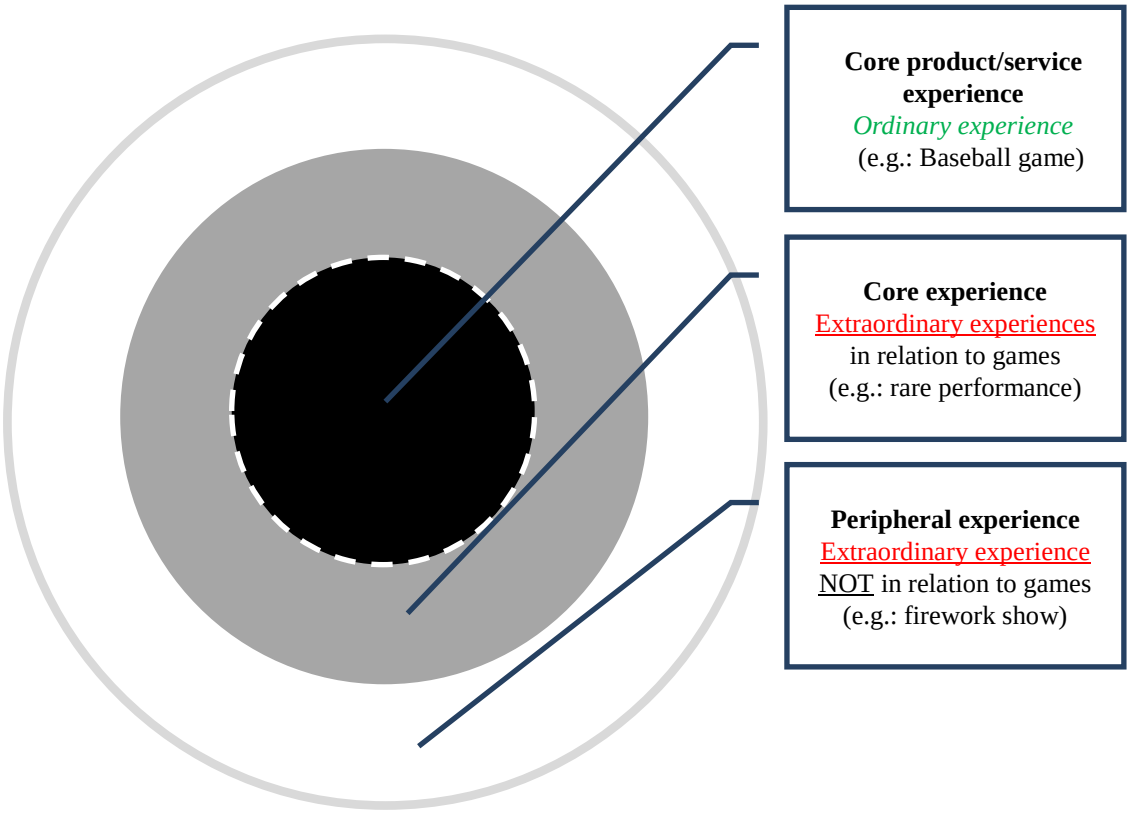

Figure 9: Ordinary and extraordinary experiences in CPBL

Note. revised from. Hagedorn-Rasmussen, & J., Sundbo (2008)

4.4 Summary

The current research conducted four focus groups in order to reach the aims and objectives of the research. Participants were recruited as volunteers via the internet. Homogeneity and segmentation were controlled, but some biases still occurred. The questions of focus group were constructed from the literature review and the issue of distinguishing the boundary and the specific contexts of CPBL upon the difference between ordinary and extraordinary. In conclusion, the boundary of ordinary and extraordinary experience in CPBL was identified. Core product and product experience, core experience and peripheral experience are three layers of spectating (consumer) experiences. Creating more peripheral experiences is the main focus for clubs which

tend to deliver more extraordinary experiences. Core experience is a supportive ambit for linking game and events with extraordinary experiences, but it cannot be arranged by the clubs. Moreover, several specific aspects of consumer experience at CPBL games have been identified by the current research. Brother Elephants and Sinon Bulls are categorized into one group of clubs which tend to provide more ordinary experiences to spectators while the two other clubs are in a different group because of their delivery of extraordinary experiences. Different dates (weekday or weekend) and stadia are another two specific contexts in CPBL. The findings helped the researcher to design an appropriate survey design (i.e., sampling strategy) in order to best be able to compare the differences of consumer behaviours between these groups (three identified specific contexts). The design of the survey can to best investigate the relationships between consumer experience, service quality, consumer satisfaction, and loyalty in Taiwanese baseball games, so as to confirm the research model. In the final stage, the model testing by comparing specific context in CPBL, in order to address the influence of consumer experience upon consumer behaviours.

CHAPTER 5: Quantitative Approach

5.1 Introduction

During the qualitative stage, the specific characteristics of consumer experiences in professional baseball in Taiwan were discovered by conducting focus groups. The current researcher therefore used the quantitative stage in order to investigate the relationships between consumer experiences, service quality, consumer satisfaction, and loyalty and test the model created according to those specific characteristics in Taiwanese professional baseball games. Chapter 5 and 6 mainly focus on the quantitative approach followed in the current research. The development of a measurement instrument and the sampling options and decisions were discussed in Chapter 5, whereas data analysis is conducted and presented in Chapter 6. The development of the instrument includes the discussion of the pertinence of each dimension, reliability, and validity which were enhanced by a pilot test, and the consideration of various sampling issues. First, the development of the instrument refers to the detail of how reliable and valid items and dimensions are. Second, the pilot test and validity and reliability issues are presented.

5.2 The research instrument: Questionnaire

The original questionnaire used includes five major research variables and demographic and behavioural variables comprising 59 items. The scale of measuring consumer experience is 18 items gathered into 5 dimensions (i.e., SENSE, RELATE, EMOTION, THINK and IMMERSION). The scale of service quality is comprises 15 items gathered into a single dimension. The scale of consumer satisfaction comprises 6 items gathered into 2 dimensions

(overall and transaction-specific). The scale of consumer loyalty is made of 7 items gathered into 2 dimensions (attitudinal and behavioural). Demographic and behavioural variables are measured using 11 items (see appendix 2). The development of the questionnaire is discussed variable by variable in this section. The current research used a set of data which is collected from the games of Sinon Bulls (home team) and Brother Elephants (guest team) as a pilot test in order to assess the reliability and validity before going further into the data collection process. There were 303 valid questionnaire used in the pilot test. The statistical approach, item and factor analysis were used to analyze the common factors of the instrument. It helps the current research to reassess the instrument and enhance the quality of the data. These analyses were conducted using IBM SPSS Statistics program version 19. In the chapters 5 and 6, the current research used some abbreviations to stand for the name of varialbe. For instance, "EX" refers to consumer experience, "SQ" refers to service quality, "CS" refers to consumer satisfaction, and "CL" refers to consumer loyalty.

The analysis of items' reliability is conducted with two methods: the comparison of extreme values (i.e. critical ration) and the test of homogeneity value (i.e. corrected item-total correlation, and Cronbach's Alpha). Bryman (2008) said that reliability refers to the consistency of a measure of a concept; it is about the stability of measurements or results. Churchill and Iacobucci (2010) noted that reliability is all about stability and equivalence. Stability means that the scores in each measure at different points of time should have a good correlation index. Equivalence refers to the level of consistency between the scores. They also noticed that the internal consistency coefficient is the most important feature for assessing reliability. Cronbach's Alpha is the most commonly used indicator to evaluate internal consistency. Bryman (2008:151) explained that validity refers to the issue of whether an indicator (or set of indicators) that is devised to gauge a concept really measures that concept. In other words, validity is the degree of accuracy of the research instrument. Fink (2003) and Bryman (2008) noted that face validity represents the basic validity of the research. Churchill and Iacobucci (2010) summarized that content validity and

construct validity are other types of validity which are widely considered in marketing and management research.

First, face validity means the research instrument is made of suitable questions which refer to the concept of the research (Bryman, 2008). It might be established by someone who has experience of the research subjects and determine what factors or question should be put into the research instrument. The current research considered dimensions and items used by other scholars. For instance, the questionnaire includes items of consumer experience which were used and revised by Schmitt (1999) and Liao (2004), and integrated further aspects of consumer experience which came from Sumino and Harada (2004), Kao, et al. (2007), Vanhamme (2008), and Koenig-Lewis and Palmer (2008). Items of service quality were taken from the SEQSS instrument developed by Ko, et al. (2011). The items measuring consumer satisfaction were developed by Yi's (1990), Hallowell (1996), Bodet (2008), McDowall (2010) and Bodet (2011) and the items measuring consumer loyalty were previously used by Heere & Dickson (2008), Bodet (2008), and Yoshida & James (2010). The development of the questionnaire is further discussed in the following section. The process of developing the research instrument therefore meets the criteria of face validity. Moreover, the research conducted four focus groups to gain more knowledge about the CPBL spectator experiences in order to develop an appropriate quantitative instrument. Face validity is also concerned with the language issue (Fink, 2003). The questions of the questionnaire were initially written in English, but as not all potential respondents were able to read and answer the questions in English. All questions were translated from English to Mandarin. After this translation, the questions were translated back to English by a Taiwanese student who obtained a PhD in the USA. The questions in Mandarin were modified again by comparing the original and retranslated questions so as to achieve better face validity.

Second, content validity is similar to face validity, but require more theory to be supported than the concept of the validity. According to the literature review, each variable in the current research has received a lot of attention from scholars. Most items and dimensions were

implemented, tested, and validated, and the relationships between these variables have also been supported by many scientific publication. For instance, Oliver (1981), Fornerino, et al. (2008) claimed that consumer experience is closely linked to consumer satisfaction. Schmitt (1999) described that experiential marketing is a useful marketing approach to influence consumer behaviour (especially consumer satisfaction and loyalty). The relationships between service quality, consumer satisfaction, and loyalty have also been widely discussed. The current research attempts to produce empirical evidence of the influence of consumer experience by assessing its role on the relationships with service quality, consumer satisfaction, and loyalty. Thus, both the research instrument and hypothesizes therefore sought to ensure content validity with a broad range of theoretical support from the literature. Finally, construct validity relates to the suitability of the research instrument. The main concern of construct validity is that the instrument is able to obtain the desired characteristics from the participants. This type of validity can be ascertained by conducting a factor analysis. Thus, the questionnaire of the current research was not only developed upon literature review, but also developed with a pilot test to achieve a better construct validity. The questionnaire developments, the outcomes of the item and factor analysis are then discussed in the following sections.

5.2.1 Consumer Experience

The SEMs framework, which has been supported by Schmitt (1999), sub-dimensions measuring sensory experience (Sense), affective experience (Feel), creative cognitive experience (Think), physical experience, behaviours and lifestyle (Act), and social-identity experiences that result from interaction with a reference group or culture (Relate). Although the SEMs framework was developed within a North American context, it has also been used by European marketing specialists and researchers (Carù & Cova, 2003). Holbrook (2000) explained these five relevant aspects of experience are quite similar to the three consumption Fs (Fantasies, Feelings and Fun) proposed by Holbrook and Hirschman (1982). The three Fs were supported by the traditional

cognition-affect-behaviour framework. Therefore, fantasies included cognitions aspects and were broken into two aspects in Schmitt's framework: sense and think. Feeling refers to affects and corresponds to the feel aspect of the strategic experiential modules. Fun stands for behaviour and is similar to Act. According to Holbrook's (2000) explanation, the Relate aspect is not emphasized in traditional cognition-affect-behaviour frameworks. It is the sole unique dimension of the SEMs framework. Other dimensions of the SEMs are similar to other consumer experience dimensions which are emphasized by other scholars (e.g., Kao, et al., 2007; Vanhamme, 2008; Koenig-Lewis & Palmer, 2008).

Schmitt (1999) developed an assessment tool for experiential marketing. This tool outlines the basic attributes of consumer experience within the framework of experiential marketing theory. However, this tool requires some modifications in order to fit with the objectives of the current research. The current research integrated the experiential marketing attributes from this tool with other experience dimensions, which were obtained from other scholars, such as Sumino & Harada (2004), Liao (2004), Kao, et al., (2007), Vanhamme (2008), and Koenig-Lewis & Palmer, (2008). This meant that the measure was able to cover a wider range of the experience concept. Table 11 shows the list of items established by Schmitt (1999). For each dimension, one of the items was a reversed item, expressed in negative way (-). However, as Herche and Engelland (1996) demonstrated that these reversed items could alter the dimensionality of constructs, the current research modified them to be expressed in a positive manner (+).

Table 11: The items measuring consumer experience

Sense	
1	The (ExPro) tries to engage my senses. (+)
2	The (ExPro) is perceptually interesting. (+)
3	The (ExPro) has sensory appeal for me. (+)
Feel	
4	The (ExPro) tries to put me in a certain mood. (+)
5	The (ExPro) makes me respond in an emotional manner. (+)
6	The (ExPro) tries to appeal to feelings. (+)
Think	
7	The (ExPro) tries to intrigue me. (+)
8	The (ExPro) stimulates my curiosity. (+)
9	The (ExPro) try to appeal to my creative thinking. (+)
Act	
10	The (ExPro) tries to make me think about my lifestyle. (+)
11	The (ExPro) reminds me of activities I can do. (+)
12	The (ExPro) try to make me think about actions and behaviours. (+)
Relate	
13	The (ExPro) tries to get me to think about relationships. (+)
14	I can relate to other people through this (ExPro). (+)
15	The (ExPro) try to remind me of social rules and arrangements. (+)

Source. Schmitt (1999:232)

Note. (+) items are expressed in a positive way.

The current research used the items measuring consumer experiences developed by Liao (2004). These were also based on Schmitt's (1999) SEMs and but they were developed to fit with spectator experiences of professional baseball in Taiwan. In Liao's (2004) work, the Act dimension from the SEMs framework was taken out of the scale because its meaning was similar to consumer behaviour in this circumstance. The key idea behind the Act dimension is assess the spectators' likelihood to attend another live baseball game in a near future. Consequently, there are overlapping items between the constructs of Act and consumer loyalty. Moreover, Liao (2004) also replaced the Feel dimension with a Service Quality dimension. The current research

followed Liao's (2004) dimension but used service quality as independent construct so as to distinguish consumer experience and service quality. In other words, the current research tends to keep consumer experience as an intangible, affective, and emotional dimension and only focused on the tangible, cognitive, and rational aspects with the service quality construct. The current research also considered other points of view, as highlighted by various scholars, in order to construct a questionnaire which embraced all experiential dimensions in depth. Some of them are widely recognised, such as *Entertainment* (Holbrook, 2000; Hackley & Tiwsakul; 2006), *Emotion* (Richins,1997; Sumino and Harada, 2004; Tsaur, et al.; 2007; Kao, et al., 2007; Bigné, et al.; 2008; Fornerino, et al.; 2008; Koenig-Lewis & Palmer, 2008), *Surprise* (Kao, et al., 2007; Vanhamme, 2008), *Immersion* (Kao, et al., 2007; Fornerino, et al.; 2008), and *Social interaction* (Fornerino, et al.; 2008; Morgan, et al., 2004). However, if one scrutinises the definition of entertainment experience set out by Holbrook (2000), there is an overlap between entertainment and emotion. The social interaction is also similar to the Relate dimension inform the SEMs framework. Surprise is also a part of emotion based on Richins (1997) and Izard's (1977) definition.

As Holbrook (2000) and Carù and Cova (2003) suggested, the current research added the *Emotion* dimension which was adapted from Sumino and Harada (2004) (originally designed by Richins in 1997). This dimension is also quite similar to Schmitt's (1999) Feel dimension. Some scholars (e.g., Vanhamme, 2008, Koenig-Lewis & Palmer, 2008; originally constructed by Izard in 1977) used Emotion instead of the Feel dimension. The *Immersion* dimension was adapted from Kao, et al. (2007), Fornerino, et al. (2008) in order to have a broader consideration in measuring consumer experience. Therefore, the current research also took account of the dimensions of emotion and immersion in order to complement the measure of the consumer experience construct. Thus, five dimensions compose the scale measuring consumer experience: Sense, Relate, Emotion, Think and Immersion. Each item was assessed on seven-point Likert scale ranging from strongly disagree (1) to strongly agree (7). Table 12 shows each dimension

and related items of consumer experience used in the current research.

Table 12: The scale measuring consumer experience in the current research

No	Items
Sense	
EX 1	The game experience was visually overwhelming
EX 2	The sounds of the game experience were overwhelming
EX 3	Today's game provided many different types of sensory simulation
Relate	
EX 4	Attending this game strengthened the bonds I have with the friends or relatives I came with
EX 5	Attending this live game strengthened my relationship with the club
EX 6	Attending this live game strengthened my relationships with the players
Emotion	
EX 7	Something about today's game surprised me a lot
EX 8	Something about today's game gave me a lot of joy
EX 9	Something about today's game excited me
EX 10	Overall, I feel very positive emotions about today's game
Think	
EX 11	I think this game helped me feel like I belong to a group with a shared identity
EX 12	I think this game helped me appreciate the pressure that players are under
EX 13	I think this game helped me to understand the rules of baseball
EX 14	I think this game showed me the importance of spirit in sport
EX 15	This game inspired me to learn how to play baseball
Immersion	
EX 16	I lost track of time while watching today's game
EX 17	This game made me forget my immediate surroundings
EX 18	This game made me forget about the world beyond baseball

*Source.*from Vanhamme (2008:113), Plamer (2008), Kao, et al. (2007), Sumino & Harada (2004), Liao (2004)

1. The reliability analysis of the Consumer Experience scale

The evaluation of internal consistency is made tanks to the Cronbach's Alpha for each dimension. First, the Cronbach's Alpha value for the Sense dimension is .884 (3 items). This value is satisfactory and the value can not be improved if any item was deleted (see Table 13 in appendix 5). Gay (1996) believed that if the value is over .80, it is considered as a high reliability level for the social sciences field. The Alpha value for the Relate dimension is under .80 (only .787) which is not completely satisfactory even if it could be acceptable. According to Table 14 (see appendix 5), the Cronbach's Alpha can be raised to .86, if the item EX4 is deleted. The Alpha value of Emotion (α = .893; 4 items) can be improved if EX10 is deleted (see Table 15 in appendix 5). The Alpha value of Think can be improved (α = .822; 5 items; see Table 16 in appendix 5) if EX15 is deleted. The Alpha value of Immersion is satisfactory (α =.888; 3 items; see Table 17 in appendix 5) and will not be changed. Therefore, EX4, 10, 13 and 15 can be considered for deletion. Table 18 shows the overall results of the item analysis of the consumer experience scale including a comparison of Extreme values and the test of homogeneity. Critical ration value and correlations between are good (statistical significance is reached). Although the Cronbach's Alpha value and other reliability assessments were satisfactory enough, the current research still deleted EX 13 and 15 to further enhance the reliability power of the scale. The other items were kept and assessed with the factor analysis (see Table 19).

Table 19: Item Analysis of the Consumer Experience scale

	Comparison of Extreme value	Test of homogeneity			
Items	Critical Ration (CR)	Correlations	Corrected Item-Total correlation	Cronbach's Alpha if Item Deleted	Keep or Delete
EX1	16.371***	.769***	.748	.951	Keep
EX2	14.724***	.712***	.700	.952	Keep
EX3	15.453***	.757***	.746	.951	Keep
EX4	12.406***	.677***	.651	.953	Keep
EX5	13.307***	.682***	.652	.953	Keep
EX6	15.838***	.726***	.696	.952	Keep
EX7	15.999***	.763***	.739	.951	Keep
EX8	20.565***	.838***	.828	.950	Keep
EX9	17.057***	.813***	.808	.950	Keep
EX10	13.533***	.732***	.714	.952	Keep
EX11	17.628***	.774***	.756	.951	Keep
EX12	13.057***	.729***	.713	.952	Keep
EX13	10.531***	.598***	.569	.954	Delete
EX14	14.373***	.738***	.718	.952	Keep
EX15	10.028***	.571***	.519	.955	Delete
EX16	15.788***	.766***	.740	.951	Keep
EX17	15.649***	.724***	.701	.952	Keep
EX18	11.970***	.714***	.684	.952	Keep

*** p<.001, Cronbach's Alpha: .954

2. The validity of the Consumer Experience scale

The Kaiser-Meyer-Olkin measure of sampling adequacy (KMO) is .938 and the Bartlett's test is significant which means that the conditions for a factor analysis of consumer experience are perfect (Kaiser, 1970; 1974). The result of the factor analysis demonstrated that EX4, EX10 are not in the right factor and there is no similarity between items and factors (EX4 should be in factor 4 and EX10 should be in factor 5). Therefore it is recommended to delete those items so as to improve the validity of consumer experience scale (see Table 20).

Table 20: Rotated Component Matrix [a] of Consumer Experience scale

	Component				
Items	1	2	3	4	5
EX17	.814	.164	.190	.197	.131
EX18	.784	.127	.222	.167	.198
EX16	.698	.241	.334	.263	.072
EX10	.536	.364	.119	.344	.253
EX2	.177	.769	.298	.306	.079
EX1	.195	.751	.299	.236	.265
EX3	.208	.731	.182	.325	.289
EX4	.508	.638	.054	-.015	.256
EX12	.279	.244	.771	.251	.152
EX14	.316	.224	.745	.139	.253
EX11	.435	.304	.506	.289	.224
EX7	.279	.258	.188	.768	.319
EX9	.364	.339	.340	.673	.187
EX8	.423	.382	.300	.592	.217
EX6	.309	.222	.172	.203	.821
EX5	.131	.275	.245	.232	.809

KMO: .938 Bartlett's: 3185.173 (Sig.: .000, p< .05)
Extraction Method: Principal Component Analysis.
Rotation Method: Varimax with Kaiser Normalization.
a Rotation converged in 7 iterations.

5.2.2 Service Quality

The current research adopted the SEQSS designed by Ko, et al. (2011). The SEQSS was originally developed from the Model of Event Quality for Spectator Sports (MEQSS) which is also designed by Ko et al. and was modified to assess service quality in MLB. The scale includes 12 dimensions: skill performance, operating time, information, entertainment, concessions, employee interaction, fan interaction, sociability, valence, ambience, design, and signage. Some factors were omitted in the current research because they were too similar to some consumer experience dimensions, such as entertainment, fan interaction, sociability, valence, and ambience. The operating time dimension was also dropped because the schedule of the CPBL is not fixed

(i.e. every game is hold at 18:35 during weekdays and 17:05 for weekends) so that there is no point to assessing the differences in terms of the concept of time. Similar items were also eliminated in order to keep the scale parsimonious and manageable. The scale was reduced from 40 to 15 items and combined all items into the same dimension. Table 21 lists the service quality items used in the questionnaire.

Table 21: Scale of service quality of the current research

NO	Item
SQ01	The players' skills were good
SQ02	The team provided a high-quality event for me
SQ03	Relevant information about players was provided on the scoreboard during the game
SQ04	The players interacted well with the spectators
SQ05	The concessions offered a wide variety of foods
SQ06	The quality of food of the concession stands satisfied me a lot
SQ07	The staff were competent and accurately fulfilled their roles
SQ08	The staff were friendly and enthusiastic
SQ09	The aesthetic design of the arena and facilities is aesthetic
SQ10	Functionality and the layout of the arena are good
SQ11	The facility is safe
SQ12	There are enough signs directing me to various necessities
SQ13	The function and design of the stadium scoreboard are good
SQ14	There are attractive pre or in game shows or entertainment
SQ15	The seats are comfortable enough

Source. from: Ko, et al. (2011)

1. The reliability of Service Quality scale

The Alpha value of Service Quality is .928 (15 items) and SQ4 does not affect the reliability if deleted (see Table 22 for detailed values). The situation is similar to the other assessments of the item analysis. The results show that SQ4 can be considered for deletion in order to keep the scale neat without altering reliability (see Table 23). The Cronbach's Alpha of service quality scale is above .928 and the comparisons of extreme value and test of homogeneity are significant.

2. The validity of Service Quality scale

As the exploratory factor analysis (EFA) approach is not suitable for one dimension scale, this scale was analysed through confirmatory factor analysis (CFA). The outcomes of the CFA approach are discussed in later chapters. Meanwhile, there are only two items in the factor of Relate. The research reviewed Liao's (2004) PhD thesis which was the first study on experience in the CPBL as well as Chung's (2008) article. These authors explained that the interaction between fans and players can be an important component of the Relate factor. The item analysis of the service quality scale shows that SQ4 does not change the scale reliability, but this item has some similarity with the Relate factor. Thus, the current research added SQ4 into the scale of consumer experience used in this research. The item and factor analysis were conducted again and the results are shown in Table 25 and 26. The item analysis shows that the level of reliability of the modified consumer experience scale is good (Cronach's Alpha is .951) and no item needed to be deleted. For the factor analysis, the KMO is .935 and the Bartlett's test is significant. All items are located in the correct factors which mean that the modified scale of consumer experience has reached a good level of construct validity (see Table 24 & 25).

Table 23: Item Analysis of the Service Quality scale

	Comparison of Extreme value	Test of homogeneity			
Items	Critical Ration	Correlations	Corrected Item-Total correlation	Cronbach's Alpha if Item Deleted	Keep or Delete
SQ1	10.676***	.617***	.540	.927	Keep
SQ2	13.973***	.724***	.675	.923	Keep
SQ3	14.187***	.703***	.645	.924	Keep
SQ4	9.107***	.572***	.491	.928	Delete
SQ5	13.663***	.698***	.655	.924	Keep
SQ6	14.970***	.701***	.650	.924	Keep
SQ7	12.426***	.665***	.618	.925	Keep
SQ8	12.467***	.680***	.624	.925	Keep
SQ9	15.995***	.780***	.746	.921	Keep
SQ10	17.348***	.810***	.778	.920	Keep
SQ11	18.067***	.803***	.785	.920	Keep
SQ12	15.652***	.786***	.755	.921	Keep
SQ13	16.388***	.775***	.723	.922	Keep
SQ14	9.395***	.611***	.527	.927	Keep
SQ15	12.545***	.692***	.637	.924	Keep

*** p<.001, Cronbach's Alpha: .928

Table 24: Item Analysis of the modified Consumer Experience scale

	Compare ion of Extreme value	Test of homogeneity			
Items	Critical Ration	Correlations	Corrected Item-Total correlation	Cronbach's Alpha if Item Deleted	Keep or Delete
EX1	15.176***	.777***	.734	.948	Keep
EX2	13.208***	.740***	.702	.949	Keep
EX3	14.214***	.771***	.738	.948	Keep
EX5	13.884***	.699***	.648	.950	Keep
EX6	16.233***	.730***	.683	.949	Keep
EX7	16.253***	.794***	.761	.947	Keep
EX8	17.783***	.843***	.818	.946	Keep
EX9	16.403***	.831***	.803	.946	Keep
EX11	16.093***	.780***	.744	.948	Keep
EX12	12.773***	.748***	.709	.948	Keep
EX14	13.188***	.739***	.702	.949	Keep
EX16	14.581***	.759***	.718	.948	Keep
EX17	14.693***	.732***	.686	.949	Keep
EX18	11.822***	.706***	.658	.950	Keep
SQ4	14.048***	.744***	.703	.948	Keep

*** p<.001, Cronach's Alpha: .951

Table 25: The Rotated Component Matrix [a] of the modified Consumer Experience scale

	Component				
Items	1	2	3	4	5
EX17	.855	.192	.155	.126	.205
EX18	.758	.136	.232	.258	.119
EX16	.720	.224	.079	.280	.321
EX2	.209	.801	.136	.239	.241
EX1	.228	.781	.264	.231	.211
EX3	.217	.735	.290	.146	.324
EX6	.277	.220	.839	.149	.182
EX5	.118	.235	.792	.210	.268
SQ4	.241	.500	.523	.300	.107
EX12	.268	.318	.165	.767	.176
EX14	.313	.168	.240	.732	.235
EX11	.375	.270	.231	.537	.341
EX7	.268	.303	.353	.150	.738
EX9	.312	.326	.194	.355	.720
EX8	.372	.343	.217	.315	.656

KMO: .938 Bartlett's: 2838.506 (Sig.: .000, p< .05)
Extraction Method: Principal Component Analysis.
Rotation Method: Varimax with Kaiser Normalization.
a Rotation converged in 6 iterations.

5.2.3 Consumer Satisfaction

There are two types of consumer satisfaction: transaction-specific and overall (cumulative). Both of these were adapted by the current research in order to fit with the context of professional baseball games in Taiwan. It is because Oliver (1993) described that overall satisfaction can be derived from transaction-specific satisfaction, which means that overall satisfaction usually integrate various transaction-specific satisfactions and dissatisfactions. Yi (1990) and Hallowell (1996) claimed that a single question is reliable and valid enough to measure satisfaction: Overall, how satisfied are you with [research content]? However, single questions can appear too risky. For example, Hair, et al. (2010:706) explained that when the sample size is less than 300

and when there are less than 3 significant indicators in a single dimension, negative error variance could occur (Heywood case). McDowall (2010) used 3 items to measure overall satisfaction in the context of festivals. Consumer satisfaction can be seen as evaluative and emotion-based in service encounter industries (Oliver, 1997). Haytko and Simmers (2009) explained that service encounter-specific satisfaction is a kind of transaction-specific satisfaction which is suitable for a discrete service encounter such as hairdressing, airline travel or hospitality. The research tried to use a scale of satisfaction which had been designed in a sport context. Following Bodet's (2008) considered the two aspects of consumer satisfaction (i.e. transaction-specific and overall) in a sport context, the research therefore used the same scales and only modified the objects of satisfaction which became one game for transaction-specific satisfaction and all the games attended so far in the 2010 season for overall satisfaction.. The scales comprised three items each respectively and each item was assessed on a 7-point Likert scale ranging from strongly disagree (1) to strongly agree (7). Table 26 shows the items used for each satisfaction construct adapted from Bodet (2006, 2008).

Table 26: The scale of Consumer Satisfaction of the current research

No	Items
Transaction-specific satisfaction (the game)	
CS1	I am satisfied with my decision to attend this this game today
CS2	It was a wise choice to attend this game today
CS3	I really have enjoyed today's game
Overall satisfaction (all the season games attended)	
CS4	I am satisfied with my decision to attend games this season.
CS5	It was a wise choice to attend games in this season.
CS6	Overall, I have really enjoyed the games this season

Source. From: Hallowell (1996); Bodet (2006); Bodet (2008); McDowall (2010); Bodet & Bernache-Assollant (2011)

1. The reliability of the Consumer Satisfaction scales

The Alpha values of transaction-specific (α = .940; 3 items) and overall (α = .924; 3 items) satisfaction are above .90 which means that these two dimensions have high reliability and that it cannot be improved if items are deleted (see Table 27 and 28 in appendix 5 for further details). The reliability of the consumer satisfaction scales is high. Critical ration and correlations reached statistical significance; therefore, there is no need to remove any item to improve the level of reliability (details can be found in Table 29 & 30).

2. The validity of the Consumer Satisfaction scales

The results of the factor analysis for the consumer satisfaction scales are satisfactory too. The KMO value is .896 and the Bartlett's test is significant. As the research assumed a high correlation between the two dimensions, the factor analysis used an Oblimin method and the result is shown in Table 31.

Table 30: The Item Analysis of Consumer Satisfaction scale

	Comparison of Extreme values	Test of homogeneity			
Items	Critical Ration	Correlations	Corrected Item-Total correlation	Cronbach's Alpha if Item Deleted	Keep or Delete
CS1	19.331.***	.897***	.862	.939	Keep
CS2	18.237***	.900***	.864	.939	Keep
CS3	20.081***	.891***	.841	.941	Keep
CS4	20.444***	.889***	.837	.942	Keep
CS5	18.431***	.909***	.871	.938	Keep
CS6	19.356***	.866***	.803	.946	Keep

*** p<.001, Cronbach's Alpha: .950

Table 31: The Rotated Component Matrix of the Consumer Satisfaction scale

	Component	
Items	1	2
CS1	.955	.770
CS2	.944	.778
CS3	.938	.755
CS4	.754	.941
CS5	.801	.937
CS6	.728	.918

KMO: .896 Bartlett's: 1547.215 (Sig.: .000, p< .05)
Extraction Method: Principal Component Analysis.
Rotation Method: Oblimin with Kaiser Normalisation.

5.2.4 Consumer Loyalty

Dick and Basu (1994) distinguished two types of consumer loyalty: attitudinal and behavioural loyalty. Intention-based behavioural loyalty can be measured by using proportion of purchase, sequence of purchase and probability of purchase. Attitudinal loyalty appears first and leads to future actions (Liddy, 2000; Schijns, 2003). Thus, the instrument of consumer loyalty in the current research used the attitudinal loyalty to team scale, (ALTS) which was adapted from Heere and Dickson (2008), and behavioural loyalty which was based on by Bodet (2008) and Yoshida & James (2010).

Each scale item was assessed on a 7-point Likert scale ranging from strongly disagree (1) to strongly agree (7). Items 1, 4 and 5 were dropped because they were similar to items 3 and 7. Item 2 was eliminated due to high similarity with item 8 which evaluated general attitudinal loyalty. Consumer loyalty in the current research is also concerned with the frequency of attendance and length of club support. These variables are discussed in the section dealing with individual characteristics. Table 32 shows the items of attitudinal and behavioural loyalty.

Table 32: The scale of Consumer Loyalty of the current research

No.	Items
Attitudinal loyalty	
CL1	I would be committed to the team even if they had no star players
CL2	I could never switch my loyalty from this team, even if my close friends were fans of another team
CL3	Even if this team lacked physical skill, I would remain committed to team
CL4	It would be difficult for me to change my beliefs about this team
Behavioural loyalty	
CL5	The probability that I will attend another game of my team in the future is
CL6	The probability that I will attend the next game of my team is
CL7	The likelihood that I would recommend my friends to come to live CPBL game in the future

Source. From: Heere and Dickson (2008); Bodet (2008); Yoshida and James (2010)

1. The reliability of the Consumer Loyalty scale

The reliability of the consumer loyalty scale is satisfactory as the Alpha value of attitudinal loyalty items is .910 (4 items; see Table 33 in appendix 5), and behavioural loyalty items is .874 (3 items; see Table 34 in appendix 5) and the overall Alpha of consumer loyalty is .917 (7 items; see Table 35 in appendix 5). All items can be kept in the sale. Table 36 presents the results of the item analysis for consumer loyalty and shows that all items reached a good level of reliability (Critical Ration values are significant, correlations and Cronbach's Alpha is .917) which means that no items have to be deleted.

2. The validity of the Consumer Loyalty scale

The dimensions of consumer loyalty are related to each other. Thus, the factor analysis was conducted using an oblique rotation. The KMO value is satisfactory (.892) and the Bartlett's test is significant. More details of the analysis can be found in Table 37.

Table 36: The Item Analysis of the Consumer Loyalty scale

	Comparison of Extreme value	Test of homogeneity			
Items	Critical Ration	Correlations	Corrected Item-Total correlation	Cronbach's Alpha if Item Deleted Factor loading	Keep or Delete
CL1	16.713***	.804***	.770	.902	Keep
CL2	16.498***	.817***	.773	.901	Keep
CL3	17.605***	.833***	.809	.897	Keep
CL4	12.650***	.826***	.760	.902	Keep
CL5	18.129***	.836***	.786	.900	Keep
CL6	14.056***	.739***	.653	.913	Keep
CL7	13.635***	.725***	.665	.912	Keep
*** p<.001, Cronbach's Alpha: .917					

Table 37: The Rotated Component Matrix of the Consumer Loyalty scale

	Component	
Items	1	2
CL1	.915	.605
CL2	.906	.554
CL3	.872	.607
CL4	.867	.595
CL5	.695	.901
CL6	.552	.894
CL7	.557	.861

KMO: .892 Bartlett's: 837.575 (Sig.: .000, p< .05)
Extraction Method: Principal Component Analysis.
Rotation Method: Oblimin with Kaiser Normalization.

5.2.5 Demographic and Behavioural variables

Bouchet, et al. (2011) created a measurement of sport spectator profiles based on their consumption patterns, based on the work of Bourgeon and Bouchet (2001). They stated that spectators' consumption patterns could be divided into four groups based on the main

consumption experiences being searched for: First, *Opportunist*, whose behaviours express relative neutrality with any demonstrative support being forced by a collective movement, such as Mexican waves. Participation is linked to the hope of receiving benefits and utilities. *Aesthete*, whose behaviour is oriented towards quality, beauty, exceptional performance, fair play, and the drama and theatrical intensity of the performance. *Supporter*, whose behaviour is characterised by a strong degree of support towards the athletes or the teams. Fans want to have the feeling of being co-producers by showing a physical and vocal presence. *Interactive*, whose behaviour is oriented towards entertainment and shared emotion in reaction to objects and people's actions. They react and interact, and project themselves into the event, sometimes beyond the sport venues. Poulsson and Kale's (2004) finding is a good example of this diversity, emphasizing the fact that spectators who watch on TV and those who attend live events illustrate different types of participation. Because they have different internal expectations for the game, this produces diverse types of behaviour. When the sport spectators' behaviour and consumer experiences are addressed, it offers important background information with which sport marketers can implement marketing strategies and activities in relation to the experiential dimension of their event. Moreover, Kruger and Saayman (2012) focused on the critical success factors (hereafter referred to as CSFs) and described that CSFs may be different in terms of specific context of sport events, but it is crucial that sport event organisers identify the CSFs specific to the event in order to maximise spectator satisfaction, loyalty and increase in attendance. Therefore, they tried to find the CSFs at Marathon events. They suggested that the critical success factors in sport events are: first, although the outcomes of sport event cannot be predicted or controlled by sport managers (Yoshida & James, 2010), sport organisers should provide memorable spectator experience by managing internal environment in order to attract new and retain current spectators. Second, individual characteristics are important in examining the sport spectators' experiences in order to better understand their behavioural choices and patterns (Gibson, 2005). Thus, demographic and behavioural variables are the last section of the questionnaire. Precisely, the variables measured

were: gender, age, marriage status, education, occupation, support, length, frequency, and expenditure. Table 38 shows demographic behavioural items used in the research questionnaire.

Table 38: The Demographic and Behavioural Questions

No	Item	Note
1	Gender	Assess the gender distribution of the respondents
2	Age	Assess the age distribution of the respondents
3	Marriage	Assess the marriage status of the respondents
4	Education	Assess the educational status of the respondents
5	Occupation	Assess the occupational status of the respondents
6	Support	Identify which team the respondents support
	Length	Identify the length of respondents' club support in years
7	Frequency	Identify the number of games the respondents attended during the 2011 season
8		Identify the number of games the respondents watched on TV during the 2011 season
9		Identify the number of games the respondents attended during the 2010 season
10		Identify the number of games the respondents watched on TV during 2010 season
11	Expenditure	Identify the average amount of money spent by the respondents on game tickets and club merchandise per month
12	E-mail contact	Obtain their email address to contact them again after the 2012 season

Although some items are proposed for deletion (i.e. EX4, EX10, EX13 & EX15) or moved to different components (i.e. SQ4 was moved to the consumer experience dimension), based on the pilot test results, the reliability and validity of the instrument were confirmed. The current research removed those items and produced a new instrument for the main research survey (see appendix 3). Therefore, the data of the pilot study, which was collected from the games between Sinon Bulls (home team) and Brother Elephants (guest team), could be aggregated to the final overall sample of the research. In other words, the current research collected 3 more sets of data

in order to complete the data collection. This research step is further discussed in the next section where the reliability and validity of the instrument surveying the full sample analysed and further discussed further using the path analysis (see section 6.3).

5.3 Sampling

The current research used a judgmental and convenience sampling strategy for each game which is chosen by the current research. Levy and Lemeshow (1991) noted that judgmental sampling is a type of non-probability sampling which collects data based on the investigator's judgment. Therefore, it might lead to more valid and reliable results if each games is chosen based on specific features rather than using a random sampling approach (Warwick, et al., 1975; Levy & Lemeshow, 1999). There is a system which is called "theoretical home games" in CPBL. This means each club has its own home ground stadium; the clubs also tend to arrange "home games" in other cities and create more events for these "home games". However, those games are not really held within a home stadium environment. It is because that the 4 clubs arrange about 240 games per season (two parts, 120 games each) in 12 stadia around Taiwan, rather than stay in the home stadia. Considering the consistency of spectator experiences and the concept of home game advantage in sport (Wakefield & Sloan, 1995; Nevill & Holder, 1999) and it was difficult for the current research to collect data in each stadium because of time and cost issues, the current research only sampled home baseball stadiums for each club. Thus, the current research only collected data from home city stadia. For instance, Tienmu and Hsinchuang stadia for Brother Elephants; Taoyuan Int'l Stadium for Lamigo Monkeys; Taichung and Taichung Int'l Stadia for Bulls; and Tainan Stadium for Uni-President 7-Eleven Lions.

The 2011 CPBL season overall attendance could not be evaluated before the end of the season, which means that the overall size of the surveyed population was unknown. Scheaffer, et al.

(2011) suggested that the sample size has to be calculated by empirical assessments such as graphical or numerical techniques, when the population is infinite. As the CPBL spectator population is very high, an empirical assessment is needed in order to acquire a general estimation of the CPBL population. Gitter and Rhoads (2010) and Lemke, Leonard and Tlhokwance (2010) used the average attendance as a main index for calculating the sample size needed in their research in MLB. According to the CPBL official records for the 2010 season, the average number of spectators was about 2,681 per game (Standard Deviation: 1,799). Krejcie and Morgan (1970) advocated determining sample sizes for research (population size known) using this formula:

$$\mathrm{SIZE} = \frac{x^2 NP\,(1-P)}{d^2(N-1) + x^2(1-P)}$$

x^2 = table value of Chi-Square at d.f. = 1 for desired confidence level

0.10 = 2.71; 0.05 = 3.84; 0.01 = 6.64; 0.01 = 10.83

N = population size

P = population proportion (assumed to be .05)

d = degree of accuracy (expressed as a proportion)

As the average number of spectators per CPBL game is about 2,681, the formula suggested that the minimum sample size is 336 (confidence level: 95%, margin of Error: 5%). On the other hand, Morse (2000) described that estimating the sample size should also consider other factors, such as the quality of the data, the scope of the study and the nature of the topic. Fitzner and Heckinger (2010) also indicated that when the sample is too small or large, it will influence the findings of the research. Thus, the current research also looked at the minimum sample size required by several statistical tests and types of analysis. For a factor analysis or regression analysis (observed correlations of .60, with a .95 confidence interval), Gordon (1968) and Gorsuch (1983) suggested that 100 responses should be the minimum sample. Markham and

Rakes (1998) claimed that when the variance of the data is low or medium, a sample size above 200 has a higher R-square value in a regression analysis. Milton (1986) provided a table of sample size determination for multiple regression studies. When the significance test for Beta coefficients is at the .05 level, the delta R-square value at .10 (it is usually decided by the researchers and .10 is the middle value of delta R-square), and R-square at .60 (R-square is the overall value of the model: it is the lowest value which can be accepted in the regression analysis), the minimum sample size is 161 + K (K is the number of independent variables). For Structural Equation Models (hereafter referred to as SEM), Anderson and Gerbing (1988) claimed that if a sample size is 150 or more, it can be considered for a practical use for SEM. However, Boomsma and Hoogland (2001) supported the suggestion from Tanaka (1984) and Harlow (1986) which estimated that a sample size of 400 or 500 is needed in order to prevent non-convergence and improper solutions. When the sample size is under 200, the problem of non-convergence still occurs. They suggested that the best sample size for SEM using maximum likelihood estimation is 400.

The main purpose of experiential marketing is to provide additional extraordinary experiences in order to create hedonic, positive, and unforgettable experiences. Therefore, the current research tried to address the influence of these experiences on consumer behaviour (especially consumer satisfaction and loyalty) by comparing differences of influences between ordinary experiences and extraordinary experiences. Based on the suggestion on Scheaffer, et al. (2011), the focus groups' findings can help to define the sampling strategy by considering several factors. For instance, the four clubs were segmented into two groups following the participants' feedback: one group with clubs which tend to provide extraordinary experiences during their home games (i.e. the Lions and Monkeys), and a second group with clubs which tend to deliver ordinary experiences during their home games (i.e. the Elephants and Bulls). Thus, the different set of games (ordinary experience clubs & extraordinary experience clubs) was then considered in the sampling strategy. Meanwhile, participants in the focus groups also agreed that a greater degree

of diversity was also noticeable between weekdays (Monday to Thursday) and weekends (Friday to Sunday) games, and between different stadia. Consequently, particular statistical approaches (i.e., path analysis which is one type of structural equation modeling) were considered in order to compare and address the role and influence of various consumer experiences on the relationships between service quality, consumer satisfaction, and loyalty.

Therefore, the ideal sample size is about 150 responses per game, 300 responses per club, and 1200 in total. Practically, in order to have at least 150 valid questionnaires per game a target of 170 was set. The survey period started on the 3rd of June and lasted until the 17th of September 2011. Although only 8 games were needed in the sampling plan, the current research chose 4 more games as alternatives (12 games in total) due to bad weather conditions. The first set of data was collected from the games between Sinon Bulls (home) and Brother Elephants (guest) in the Taichung Stadium and Taichung Int'l Stadium. Only two games were surveyed because no game was arranged during weekdays in the Taichung Int'l Stadium and during weekends in the Taichung Stadium. This set of data was used as a pilot test and was later combined with the other sets of data. Table 39 shows the detail of sampling distribution.

The sampling strategy's objective was to capture the diversity of the crowds and the diversity of consumer experience. All types of spectators were solicited without using any predefined criteria, with the exception of spectators under 18 years old because of ethical considerations. Because of the nature of the satisfaction concept, which is a post-experience assessment, it was not possible to survey the spectators before or during the game. As the surveying moment had to be as close as possible to the last experience to be as valid as possible, the most appropriate moment to collect the questionnaire was when the game had just finished and the spectators were walking out of the stadium. However, the code of the conduct of the CPBL stipulates that all events and individuals have to leave the stadium within 30 minutes. Thus, time pressure was the main concern during the data collection. The sampling strategy then mainly followed a convenience sampling strategy and also involving judgmental sampling to filter under 18 years

old. The current research used a stall with a poster which was set outside the stadium and 3 to 5 postgraduate students, who studied in the department of leisure and recreation management of a local university, administrated and collected the questionnaires from spectators, who voluntarily came to take part in the survey. The surveyors only had to exclude from the survey the spectators who were obviously under 18 years old and make sure all respondents were 18 years old and over. This was the most effective way to collect data in the short period of time. Moreover, most spectators could finish answering the questionnaire within 5-8 minutes and a small gift, as requested by the CPBL, was given when it was finished and returned. 170 questionnaires were administrated and collected after each chosen game. The overall response rate was 100% as 1360 were given and returned. However, only 1229 questionnaires were considered valid. Incomplete questionnaires and questionnaires, which were accidentally answered by less than 18 years old spectators, were omitted from the final sample. As more questionnaires were collected than was expected, each sub-sample had 150 or more valid questionnaires. The effective response rate was about 90.36%. The final sample breakdown is displayed in Table 40.

Table 39: The sampling strategy

Home Team	Home stadium	Guest Team	Expected Sample Size	
			Weekday	Weekend
Brother Elephants	Xinzhuang	Sinon Bulls	170	**
	Tianmu		**	170
Lamigo Monkeys	Taoyuan Int’l	Uni-President 7-Eleven Lions	170	170
Sinon Bulls	Taichung	Brother Elephants	170	**
	Taichung Int’l		**	170
Uni-President 7-Eleven Lions	Tainan	Lamigo Monkeys	170	170
Total			1360	

**: No game was arranged.

Table 40: The final sample breakdown

Home Team	Home stadium	Guest Team	Actual Sample Size	
			Weekday	Weekend
Brother Elephants	Xinzhuang	Sinon Bulls	151	**
	Tianmu		**	150
Lamigo Monkeys	Taoyuan Int'l	Uni-President 7-Eleven Lions	162	159
Sinon Bulls	Taichung	Brother	153	**
	Taichung Int'l	Elephants	**	150
Uni-President 7-Eleven Lions	Tainan	Lamigo Monkeys	151	153
Total			1229	

**: No game was arranged.

The overall sample size of the current research is 1229, and was collected from 8 games during the second half of the 2011 CPBL season. The percentage of male spectators was larger than that of female (Male: 64.6%; Female: 35.4%). The average age of respondent was 27.4 years old. The oldest respondent was 65 years old and the youngest was 18 years old. Most of them were single (79.5%, which includes .1% who were divorced). The majority of spectators held a first degree (61.9%), and only .8% of spectator did not have a secondary school degree. In terms of occupation, the largest groups were students (37.8%) and blue-collar workers (12.5%). The most popular club was the Brother Elephants (37.3%), followed by the Lions (27.5%), the Monkeys (19%), and the Bulls (9.9%). Only 6.3% of spectators did not support a particular club. The average duration of support for a club was 7.8 years. Most spectators who went to a live game in the 2010 season went to less than 10 games (67.8%). Only 32.1% of spectators went to more than 10 live games in that season. Besides live experiences in the 2010 season, slightly more than 50% of spectators watched at least 21 games on TV in 2010 (56.9%). Moreover, 26.4% watched less than 10 games on TV in the same season. The situation was similar in the 2011 season. Although the 2011 season had not finished, most spectators went to less than 10 live games (72.9%) and only 10.4% of spectators went to more than 21 live games in 2011. Over

50% of spectators watched more than 21 games on TV in 2011 (54.3%). Most spectators (66%) usually spent less than £20 (about to 1,000 NTD) per month on CPBL tickets or merchandise, while others spent over £20 per month. The complete details of these descriptive statistics are shown in Table 41 and 42.

Table 41: Summary of descriptive statistics for metric variables

	N	Range	Min	Max	Mean	Std. D
Age	1208	47	18	65	27.4	7.781
Support Year	964	29	1	30	7.8	6.196

Note. From: the current research

Table 42: Summary of descriptive statistics for nominal and ordinal variables

Variables		Frequency	Percent
Gender	Female	435	35.4%
	Male	793	64.6%
Total		1228	100%
Marriage	Single	936	79.5%
	Married	241	20.5%
Total		1177	100%
Education	Elementary	1	.1%
	Junior High	7	.7%
	Senior High	261	22.0%
	University	736	61.9%
	Postgraduate	184	15.5%
Team Supported	Elephant	457	37.3%
	Monkey	233	19.0%
	Bull	121	9.9%
	Lion	337	27.5%
	None	77	6.3%
Total		1225	100%

Table 42: Summary of descriptive statistics for nominal and ordinal variables (continued)

	Total	1189	100%
Occupation	Student	376	37.8%
	Teacher	58	5.8%
	Public servant	31	3.1%
	Military	24	2.4%
	Hi-Tech Industry	71	7.1%
	Service Industry	82	8.2%
	Self-employ	84	8.4%
	Unemployment	29	2.9%
	Academic Researcher	5	.5%
	Blue-collar	124	12.5%
	White-collar	84	8.4%
	Homemaker	16	1.6%
	Medical worker	11	1.1%
	Total	995	100%
2011 Live game	Less than 10	886	72.9%
	11-20	203	16.7%
	Over 20	127	10.4%
	Total	1216	100%
2011 TV game	Less than 10	285	23.7%
	11-20	263	22.0%
	Over 20	650	54.3%
	Total	1198	100%
2010 Live game	Less than 10	812	67.8%
	11-20	205	17.1%
	Over 20	180	15.1%
	Total	1197	100%
2010 TV game	Less than 10	316	26.4%
	11-20	199	16.6%
	Over 20	681	56.9%
	Total	1196	100%
Expenditure	Less 1000	783	66.0%
	1001-1500	223	18.8%
	1501-2000	111	9.4%
	Over 2001	69	5.8%
	Total	1192	100%

CHAPTER 6: Data analysis

6.1 Introduction

This chapter demonstrates how the data of the quantitative stage was analyzed in order to answer the main question of the current research: ***Can experiential marketing positively influence service quality, consumer satisfaction, and loyalty in Taiwanese professional baseball games?*** The data analysis in the quantitative stage mainly focused on two sections. The first section presents the tests of the relationships between demographic and behavioural (i.e. gender, age, education etc.) variables and the main research variables such as consumer experience, service quality, consumer satisfaction and loyalty. The result demonstrates which research variables present significant differences among the various demographic and behavioural variables. The second part of the data analysis presents the confirmatory factor analysis (hereafter referred to as CFA) in order to test the models and hypothesises of the current research. All the current research's hypotheses (see Table 43) were relying on the literature review and the findings of qualitative approach are tested statistically in this chapter.

Table 43: The current research's hypotheses

	Hypothesises
H_1	**Service quality** has a positive effect on **consumer satisfaction**
H_2	**Service quality** has a positive effect on **consumer loyalty**
H_3	**Consumer satisfaction** has a positive effect on **consumer loyalty**
H_4	**Consumer experience** has a positive effect on **consumer satisfaction**
H_5	**Consumer experience** has a positive effect on **consumer loyalty**
H_6	There is significant link between **consumer experience** and **service quality**
H_7	There is a significant difference between **ordinary** and **extraordinary experience** in terms of providers' models
H_8	There is a significant difference between **weekdays** and **weekends** in terms of providers' models
H_9	There is a significant difference between **home stadia** in terms of providers' models
H_{10}	There is a significant difference between **different stadia** in terms of providers' models

6.2 Inferential Statistics

In this section, the mean scores of consumer experience, service quality, consumer satisfaction and consumer loyalty are compared with a set of demographic and behavioural variables (i.e., gender, age, marriage, education, occupation, support team, length of support, games watched live and on TV in the 2011 season, games watched live and on TV in the 2010 season, and expenditure) so as to distinguish the level of influence of each population's variables. The scales of consumer experience and service quality have been modified following item and factor analysis, and reliability estimation. Items EX4, 10, 13, 15, 19, 20, and 21 were deleted and EX23 was moved from the service quality to the consumer experience scale. The research used IBM SPSS 19 to compare mean scores by using one-sample T test (when group number is less than 3) and analysis of variance (ANOVA) (when group number is over 3).

6.2.1 Gender

The difference between males and females regarding consumer experience reached statistical significance ($t=2.656$, $p=.008 < .05$) and female spectators gave higher scores on consumer

experience than male. However, there was no statistical significance between service quality (t=-1.505, p=.133 >.05), consumer satisfaction (t=.356, p=.722 >.05) and loyalty (t=1.964, P=.05 =.05). This result shows that female spectators perceived more intense experiences than male.

6.2.2 Age

The average age of the respondent was 27.4 years old and the standard deviation was 7.7 years. The research then divided age into 4 groups; group 1: Under 20 years old, group 2: Between 21-27 years old, group 3: Between 28-34 years old, group 4: Over 35 years old. According to the results, spectators aged under 20 gave significantly higher scores on consumer experience than those over 28 (group 3 and 4) (F=11.818, p=.000 <.05). As for service quality (F=11.784, p=.000 <.05), consumer satisfaction (F=9.664, p=.000 <.05) and consumer loyalty (F=6.782, p=.000 <.05), all results show that groups 2 and 3 (age from 21 to 34 years-old) are conspicuously lower than groups 1 and 4 (under 20 and over 35 years respectively). In general, the youngest and the eldest age groups gave higher ratings on all variables than the middle age groups.

6.2.3 Marriage

The research merged divorced with single because only .1% belonged to the former group. There were therefore only two groups: single and married. The differences regarding consumer experience (t=-1.649, p=.100 >.05) and loyalty (t=-1.518, p=.130 >.05) were not found to be significant between married and single spectators. However, married spectators gave significantly higher scores on service quality (t=-2.887, p=.004 <.05) and consumer satisfaction (t=-2.122, p=.034 <.05). This result shows that the spectators who were married perceived better service quality and expressed higher satisfaction levels than the spectators who were single.

6.2.4 Education

Elementary and junior high school are compulsory in Taiwan. The research combined them together as one group (group 1) and divided education into three more groups: Senior High (group 2), University (group 3) and Postgraduate and above (group 4). The means for all variables reached a significant level between education groups (Service quality: F=14.348, p=.000 <.05; Consumer experience: F=15.747, p=.000 <.05; consumer satisfaction: F=9.279, p=.000 <.05; consumer loyalty: F=11.704, p=.000 <.05). According to the post hoc test (Scheffe method), the mean scores of consumer experience are significantly different between each education level groups (group1= group2 >group3 >group4). The mean score of service quality was lower for the group of spectators who held a higher degree. However, there was no significant difference between the compulsory and senior high groups (Post Hoc: 1=2 >3=4). The mean scores of consumer satisfaction and loyalty shows that spectators who held a lower education degree gave higher scores (Post Hoc: 2 >3 >4). In conclusion, the relationships between education groups and all variables have opposite directions, which mean that spectators with lower education levels tended to give higher scores on each variable.

6.2.5 Occupation

None of the variables showed statistical significance when comparing the means of various occupation categories (Consumer experience: F=1.632, p=.077 >.05; service quality: F=1.327, p=.197 >.05; consumer satisfaction: F=.721, p=.731 >.05; consumer loyalty: F=.651, p=.799 >.05).

6.2.6 Supported Team

The purpose of this section is to compare the levels of perceived consumer experience, service quality, satisfaction, and loyalty according to the type of club supported. There are four clubs plus one for those who did not express any support for a particular club (Group 1: Brother Elephants; Group 2: Lamigo Monkeys; Group 3: Sinon Bulls; Group 4: Uni-President 7-Eleven

Lions; Group 5: no club supported). For consumer experience (F=6.083, p=.000 <.05), the score of Lamigo Monkeys was significantly higher than Sinon Bulls and the group of spectators who did not support a particular club. The spectators of Brother Elephants and Uni-President 7-Eleven Lions gave higher scores for consumer experience than the spectators who did not express any support for a club. For service quality (F=15.392, p=.000 <.05), the scores of Lamigo Monkeys and Uni-President 7-Eleven Lions were significantly higher than those of Brother Elephants and Sinon Bulls. For consumer satisfaction (F=8.625, p=.000 <.05), the spectators of Lamigo Monkeys and Uni-President 7-Eleven gave higher ratings and a distinction can be made between Brother Elephants, Sinon Bulls, and the group of spectators who did support a club. For consumer loyalty (F=14.008, p=.000 <.05), the spectators who support a club have similar ratings but the spectators who do not support any club have significantly lower levels than the other groups.

6.2.7 Supporting Years

The average duration of support was 7.8 years and the standard deviation was 6.1 years. Therefore, it was possible to distinguish four groups of spectators in terms of their duration of support. The first one is 2 years and less, the second between 3 and 8 years, the third between 9 and 14 years and the fourth is for support of over 15 years. There was no significant statistical difference with consumer experience (F=2.201, p=.086 >.05), service quality (F=2.752, p=.041 <.05; Post Hoc: n.s.) and consumer satisfaction (F=.869, p=.457 >.05) in terms of years of support. For consumer loyalty, there was a significant difference (F=4.181, p=.006 <.05) between groups. The mean score of group 3 is higher than those of groups 1 and 4. It shows that spectators who had supported a team for between 9 and 14 years had higher consumer loyalty than spectators who only supported for less than 2 years or those who had been supported a team over 15 years.

6.2.8 2011 Live Games

The responses dealing with watching games on TV can also be separated into four groups, which is the same as the groups dealing with live attendance. For spectators who watched games via TV the in 2011 season, service quality ratings (F=2.75, p=.064 >.05) are not considered as significantly different. However, there are big differences in terms of consumer experience (F=4.365, p=.013 <0.5), consumer satisfaction (F=2.823, p=.045 <.05) and consumer loyalty (F= 12.533, p=.000 <.05) between groups. When the frequency of game watching via TV is high, spectators usually have high consumer experience, satisfaction, and loyalty levels.

6.2.9 2011 TV games

For the spectators who watched games via TV in the 2011 season, service quality (F=1.055, p=.348 >.05) is not considered as significantly different in terms of watching frequency. However, there are big differences in consumer experience (F=5.962, p=.003 <0.5), consumer satisfaction (F=8.502, p=.000 <.05) and consumer loyalty (F=22.597, p=.000 <.05) between groups. When the frequency of watching game via TV is high, spectators usually have high consumer experience, satisfaction, and loyalty.

6.2.10 2010 Live Games

The group categories are the same as the 2011 live game groups. For the 2010 season, the statistical F value for consumer experience (F=3.414, p=.033 <.05) and consumer loyalty (F=11.236, p=.000 <.05) is significant. The mean scores for service quality (F=2.049, p=.129 >.05) and consumer satisfaction (F=2.194, p=.112 >.05) are not significantly different. This means spectators who watched less than 10 live games in 2010 and 2011 season are less loyal.

6.2.11 2010 TV games

The group categories are the same for TV games in 2011. Although the mean score for consumer experience (F=6.862, p=.001 <.05), consumer satisfaction (F=10.729, p=.000 <.05) and consumer loyalty (F=22.35, p=.000 <.05) is significantly different between groups; it is

not significantly different for service quality (F=.293, p=.746 >.05), which is similar to the 2011 season. This shows that perceptions of service quality are not influenced by the number of games via TV in the 2010 season.

6.2.12 Expenditure

There are four groups of expenditure: Group 1: less than £20, group 2: between £20-30, group 3: between £30-40, group 4: over £40. The mean score for consumer experience (F=7.703, p=.000 <.05) shows that there are significant differences between group 1, 2 and 3. Spectators who spend more money on tickets or merchandises have better consumer experience. The same applies for service quality (F=5.145, p=.002 <.05), consumer satisfaction (F=6.521, p=.000 <.05) and consumer loyalty (F=11.716, p=.000 <.05) in that spectators who pay less than £20 per month on CPBL games perceive less service quality and less satisfaction and loyalty.

6.3 Path analysis with latent variables

SEM is one confirmatory statistical method. The relationships between consumer experience, service quality, consumer satisfaction, and loyalty have been widely discussed in the literature. However, the relationships between those variables lack empirical evidence, and it is not clear which dimension is more influential than the others. Therefore, the research conducted a path analysis with latent variables (PA-LA) so as to analyze the relationship and to measure the level of influence between variables in the research model. Chang (2011) provides a process for analysing PA-LA using AMOS. This is a 12-step process which includes first and second order CFA, Bollen two steps test, assessment of normality, assessment of common method variance, assessment of internal structure of a model (validity and reliability), offending estimate, assessment of external structure of a model (overall model fit), Bollen-Stin p-value correction, Cross-validity, statistical power test and other hypothesis tests. Those steps are discussed more in

the following sections. Figure 9 shows the details of the procedure.

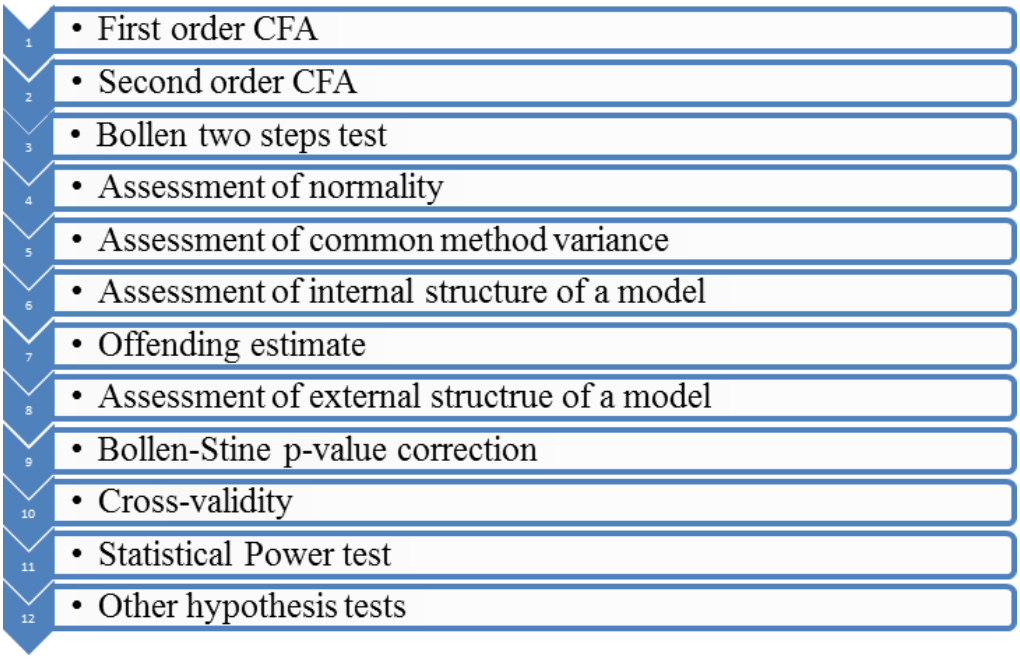

Figure 10: Standard operating procedure of analysing SEM

Note. From Chang (2011)

6.3.1 First Order CFA

First order CFA is used for evaluating whether each item measuring a dimension or a variable is valid and reliable. It is similar to item and reliability analysis in inferential statistics. In the section, each dimension of consumer experience, including SENSE, RELATE, EMOTION, THINK and IMMERSION, service quality, transaction specific, overall consumer satisfaction and attitudinal and behavioural consumer loyalty is analysed and discussed individually. Each dimension is evaluated by three assessments: Model estimates, convergent validity and Goodness-Of-Fit (GOF) (All estimates are shown in Table 44). In this stage, the research provides a value for all estimates and they are discussed in the sections of assessment of the internal and external model structure.

Table 44: The CFA assessment indexes

Model estimates				Convergent validity				Goodness of fit					
Unstandardized estimates	S. E.	C.R. t-value	P	Standardised estimates	SMCs	C.R.	AVE	χ^2	DF	χ^2/DF	GFI	AGFI	RMSEA
+	<	> |1.96|	< .05	> .70	> .50	> .50	> .50	<	>	< 5	> .90	> .90	< .08

Note: ＋ means the value should be a positive number
＜ means the value is good if it is as small as possible
＞ means the value is good if it is as large as possible

1. Consumer Experience

There are 5 dimensions in the construct of consumer experience with 3 measuring items for each dimension. Each of them is constructed as a single CFA model and assessed by 3 estimates so as to decide whether those items should be kept in the dimension or not. The SENSE dimension is the first one assessed and is then followed by the RELATE, EMOTION, THINK and IMMERSION dimensions (see Table 45).

Table 45: Modified Scale of consumer experience of the current research

No	Items
Sense	
EX 1	The game experience was visually overwhelming
EX 2	The sounds of the game experience were overwhelming
EX 3	Today's game provided many different types of sensory simulation
Relate	
EX 4	The players interacted well with the spectators
EX 5	Attending this live game strengthened my relationship with the club
EX 6	Attending this live game strengthened my relationships with the players
Emotion	
EX 7	Something about today's game surprised me a lot
EX 8	Something about today's game gave me a lot of joy
EX 9	Something about today's game excited me

Table 45: Modified Scale of consumer experience of the current research (continued)

Think	
EX 10	I think this game helped me feel like I belong to a group with a shared identity
EX 11	I think this game helped me appreciate the pressure that players are under
EX 12	I think this game showed me the importance of spirit in sport
Immersion	
EX 13	I lost track of time while watching today's game
EX 14	This game made me forget my immediate surroundings
EX 15	This game made me forget about the world beyond baseball

A. The SENSE dimension

The measurement items of SENSE are EX1, 2 and 3. For model estimates, there are no negative values of un-standardised estimates and each C.R. (t-value) is larger than|1.96|, standard error is small (only .025) and reached statistical significance (p <.05). Standardized estimates (between .838 and .902; >.71), SMCs (between .70 and .81; >.50), C.R. (.897 >.05) and AVE (.743 >.05) are excellent as for convergent validity estimates (Details in Figure 10 in appendix 5 & Table 46). However, there are only three items in this dimension. It is simply an identification model which means that the number of free parameters exactly equals the number of known values. No GOF estimates can be assessed in this model. In general, all items are good enough to be kept in the dimension. The same reasoning applies for the following dimensions.

Table 46: The CFA assessment of the SENSE dimension

	Model estimates				Convergent validity				GOF					
Item	Unstandardized estimates	S. E.	C.R. t-value	P	Standardised estimates	SMCs	C.R.	AVE	χ^2	DF	χ^2/DF	GFI	AGFI	RMSEA
EX1	1	-	-	-	.90	.81								
EX2	.942	.025	37.04	***	.85	.71	.89	.74	0	0	-	-	-	-
EX3	.927	.025	36.68	***	.84	.70								
	+	<	> |1.96|	< .05	> .70	> .50	> .50	> .50	<	>	< 5	> .90	> .90	< .08

B. The RELATE dimension

The measurement items of RELATE are EX4, 5 and 6. All estimates have reached a satisfactory level including un-standardised estimates, standard errors and C.R. (t-value) in model estimates. Although the standardised estimates (.66 <.70) and SMCs (.44 <.50) of EX4 are under the ideal value, those values are very close to it and C.R. (.853) and AVE (.664) are over .50, which shows that the overall convergent validity is accurate (Details are shown in Figure 12 in appendix 5 & Table 47). Therefore, EX4 can be kept in the dimension.

Table 47: The CFA assessment of the RELATE dimension

	Model estimates				Convergent validity				GOF					
Item	Unstandardized estimates	S. E.	C.R. t-value	P	Standardized estimates	SMCs	C.R.	AVE	χ^2	DF	χ^2/DF	GFI	AGFI	RMSEA
EX4	1	-	-	-	***.66***	***.44***								
EX5	1.303	.053	24.75	***	.82	.67	.85	.66	0	0	-	-	-	-
EX6	1.503	.062	24.19	***	.94	.88								
	+	<	> |1.96|	< .05	> .70	> .50	> .50	> .50	<	>	< 5	> .90	> .90	< .08

C. The EMOTION dimension

The measurement items of EMOTION are EX7, 8 and 9. All estimates have reached satisfactory level of GOF estimate. Un-standardised estimates are positive values, standard errors are small (between .032 and .034), and C.R. (t-value) is larger than |1.96| (p <.05). As for convergent validity, standardised estimates are between .75 and .78 (the ideal value is >.70), SMCs are between .61 and .81 (the ideal value is >.50), and C.R. (.896) and AVE (.743) are over .50 (Details are shown in Figure 12 in appendix 5 & Table 48). It shows this dimension has a good convergent validity.

Table 48: The CFA assessment of the EMOTION dimension

	Model estimates				Convergent validity				GOF					
Item	Unstandardized estimates	S. E.	C.R. t-value	P	Standardized estimates	SMCs	C.R.	AVE	χ^2	DF	χ^2/DF	GFI	AGFI	RMSEA
EX7	1	-	-	-	.78	.61								
EX8	1.079	.032	33.79	***	.90	.81	.89	.74	0	0	-	-	-	-
EX9	1.130	.034	33.79	***	.90	.81								
	+	<	> |1.96|	< .05	> .70	> .50	> .50	> .50	<	>	< 5	> .90	> .90	< .08

D. The THINK dimension

The measurement items of THINK are EX10, 11 and 12. Un-standardised estimates are positive values; standard errors are .042 and .046 which are small and acceptable in the model estimates. All values of C.R. (t-value) were larger than |1.96| and reached statistical significance. The smallest standardised estimate is higher than .75 (>.70), the lowest SMCs is over .56 (>.50), C.R. (.620) and AVE (.830) are over .50 (Details are shown in Figure 13 in appendix 5 & Table 49). All items are kept because all indicators show satisfactory level.

Table 49: The CFA assessment of the THINK dimension

	Model estimates				Convergent validity				GOF					
Item	Unstandardised estimates	S. E.	C.R. t-value	P	Standardised estimates	SMCs	C.R.	AVE	χ^2	DF	χ^2/DF	GFI	AGFI	RMSEA
EX10	1	-	-	-	.78	.60								
EX11	1.001	.042	24.04	***	.75	.56	.89	.74	0	0	-	-	-	-
EX12	1.126	.046	24.67	***	.83	.68								
	+	<	> |1.96|	< .05	> .70	> .50	> .50	> .50	<	>	< 5	> .90	> .90	< .08

E. The IMMERSION dimension

The measurement items of IMMERSION are EX13, 14 and 15. There are no negative values of un-standardised estimates and each C.R. (t-value) is larger than|1.96|, standard error is small (only .042 and .046) and reached statistical significance (p <.05). The model estimates of the immersion dimension are acceptable. Standardised estimates (between .75 and .83; >.71), SMCs

(between .56 and .68; >.50), C.R. (.620 >.05) and AVE (.830 >.05) are excellent in terms of convergent validity (Details are shown in Figure 14 in appendix 5 & Table 50). In general, all items are good enough to be kept in the dimension. Chang (2011) suggested that when there are one or two estimates that are below but close to the standard value, they can be kept as long as other estimates still in satisfactory values. For example, the values of standardised estimates and SMCs of EX4 for the convergent validity are not great but close to the standard value and other estimates such as C.R. and AVE are acceptable. Therefore, 15 items are kept and ready for the second order CFA analysis.

Table 50: The CFA assessment of the IMMERSION dimension

	Model estimates					Convergent validity			GOF					
Item	Unstandardised estimates	S. E.	C.R. t-value	P	Standardised estimates	SMCs	C.R.	AVE	χ^2	DF	χ^2/DF	GFI	AGFI	RMSEA
EX13	1	-	-	-	.74	.75								
EX14	1.037	.031	33.09	***	.88	.78	.87	.69	0	0	-	-	-	-
EX15	.808	.028	28.90	***	.87	.55								
	+	<	> |1.96|	< .05	> .70	> .50	> .50	> .50	<	>	< 5	> .90	> .90	< .08

2. Service Quality

There is only one dimension with 14 items measuring service quality (see Table 51). All items come from the SEQSS (Ko, et al., 2011) and spectators' service quality items which were developed by Bodet and Bernache-Assollant (2009).

Table 51: The service quality scale of the current research

NO	Item
SQ01	The players' skills were good
SQ02	The team provided a high-quality event for me
SQ03	Relevant information about players was provided on the scoreboard during the game
SQ04	The concessions offered a wide variety of foods
SQ05	The quality of food of the concession stands satisfied me a lot
SQ06	The staff were competent and accurately fulfilled their roles
SQ07	The staff were friendly and enthusiastic
SQ08	The aesthetic design of the arena and facilities is aesthetic
SQ09	Functionality and the layout of the arena are good
SQ10	The facility is safe
SQ11	There are enough signs directing me to various necessities
SQ12	The function and design of the stadium scoreboard are good
SQ13	There are attractive pre or in game shows or entertainment
SQ14	The seats are comfortable enough

Figure 15 and Table 52 show that each un-standardised estimate is of positive value; standard errors are .059 and .075 which are small and acceptable. All values of C.R. (t-value) are larger than $|1.96|$ and reached statistical significance. Although the value of C.R. (.515) and AVE (.936) are acceptable, standardised estimates of SQ1 (.557), SQ2 (.604), SQ3 (.653), SQ4 (.644), SQ5 (.663), SQ13 (.615) and SQ14 (.673) are smaller than .70. SMC of SQ1 (.310), SQ2 (.364), SQ3 (.403), SQ4 (.415), SQ5 (.440), SQ7 (.496), SQ13 (.378) and SQ14 (.453) are also too low ($<$.50). Moreover, the estimates of GOF are also not perfect (GFI: .757 $<$.90; AGIF: .669 $<$.90; RMSEA: .168 $>$.08). If the fitness of the model is not good, Chang (2011:129) suggested that the item which has the largest value of modification indices (MI) can be considered for deletion. Therefore, SQ4, SQ2, SQ6, SQ9, SQ11, SQ1, SQ10, and SQ13 have been successively deleted based on the MI values. Figure 16 and Table 53 show the results of all estimates. Some standardized estimates and SMC which did not a satisfactory reached good level (Standardized estimates $<$.70, SMCs $<$.50), other estimates such as C.R. (.862), AVE (.514) and GOF (χ^2/DF: 6.143; GFI: .985; AGIF: .966; RMSEA: .065) are now acceptable which means the model is

acceptable for SEM model analysis.

Table 52: The CFA assessment of the Service Quality dimension

Model estimates					Convergent validity				GOF					
Item	Unstandardised estimates	S. E.	C.R. t-value	P	Standardised estimates	SMCs	C.R.	AVE	χ^2	DF	χ^2/DF	GFI	AGFI	RMSEA
SQ1	1	-	-	-	***.557***	***.310***	.93	.51	2747.100	77	***35.6***	***.75***	***.66***	***.16***
SQ2	1.127	.065	17.41	***	***.604***	***.364***								
SQ3	1.340	.076	17.41	***	***.653***	***.403***								
SQ4	1.214	.068	17.77	***	***.644***	***.415***								
SQ5	1.295	.071	18.13	***	***.663***	***.440***								
SQ6	1.161	.060	19.19	***	.721	.520								
SQ7	1.109	.059	18.91	***	.704	***.496***								
SQ8	1.541	.074	20.78	***	.843	.711								
SQ9	1.533	.073	21.07	***	.868	.754								
SQ10	1.381	.068	20.46	***	.818	.669								
SQ11	1.387	.068	20.46	***	.817	.668								
SQ12	1.504	.075	19.69	***	.782	.611								
SQ13	1.159	.067	17.28	***	***.615***	***.378***								
SQ14	1.351	.074	18.29	***	***.673***	***.453***								
	+	<	> |1.96|	< .05	> .70	> .50	> .50	> .50	<	>	< 5	> .90	> .90	< .08

Table 53: The CFA assessment of Service Quality dimension (Revised)

Model estimates					Convergent validity				GOF					
Item	Unstandardised estimates	S. E.	C.R. t-value	P	Standardised estimates	SMCs	C.R.	AVE	χ^2	DF	χ^2/DF	GFI	AGFI	RMSEA
SQ3	1	-	-	-	***.65***	***.43***	.86	.51	55.288	9	*6.1*	.98	.96	.06
SQ5	.934	.047	19.75	***	***.66***	***.43***								
SQ7	.727	.038	19.17	***	***.64***	***.40***								
SQ8	1.075	.046	23.19	***	.81	.66								
SQ12	1.132	.049	23.18	***	.81	.65								
SQ14	1.036	.049	21.01	***	.71	.50								
	+	<	> |1.96|	< .05	> .70	> .50	> .50	> .50	<	>	< 5	> .90	> .90	< .08

3. Consumer Satisfaction

The items of consumer satisfaction were taken from Hallowell (1996), Bodet (2008), Bodet and Bernache-Assollant (2011) and McDowall (2010). There are two dimensions: transaction

specific (today) satisfaction is focused on the level of satisfaction of one single game (i.e., the game when the data were collected), and overall satisfaction which is based on the consumer's general evaluation of all transaction specific satisfaction during the 2011 season.

A. The transaction specific (today) satisfaction dimension

The measurement items of transaction specific (today) satisfaction are CS1, 2 and 3. For model estimates, there are no negative values of un-standardised estimates and each C.R. (t-value) is larger than |1.96|, standard error is small (only .019) and reached statistical significance (p <.05). Standardised estimates (between .91 and .93; >.71), SMCs (between .82 and .85; >.50), C.R. (.884 >.05) and AVE (.717 >.05) are excellent in terms of convergent validity estimates (Details are shown in Figure 17 in appendix 5 & Table 54). In general, all items are good enough to be kept in the dimension.

Table 54: The CFA assessment of the Transaction-specific (Today) Satisfaction dimension

	Model estimates				Convergent validity				GOF					
Item	Unstandardised estimates	S. E.	C.R. t-value	P	Standardised estimates	SMCs	C.R.	AVE	χ^2	DF	χ^2/DF	GFI	AGFI	RMSEA
CS1	1	-	-	-	.92	.85								
CS2	1.044	.019	55.56	***	.93	.87	.88	.71	0	0	-	-	-	-
CS3	.980	.019	52.16	***	.91	.82								
	+	<	> |1.96|	< .05	> .70	> .50	> .50	> .50	<	>	< 5	> .90	> .90	< .08

B. The overall satisfaction dimension

The measurement items of overall satisfaction are EX10, 11 and 12. Un-standardised estimates are positive values; standard errors are .019 and .020 which are small and acceptable in the model estimates. All values of C.R. (t-value) are greater than |1.96| and reached statistical significance. The smallest standardised estimates is higher than .89 (>.70), the lowest SMCs is over .79 (>.50), C.R. (.941) and AVE (.841) are over .50. (Details are shown in Figure 18 in appendix 5 & Table 55). All items are kept because all indicators are at a satisfactory level of

estimate in terms of model estimate and convergent validity.

Table 55: The CFA assessment of the Overall Satisfaction dimension

	Model estimates				Convergent validity				GOF					
Item	Unstandardised estimates	S. E.	C.R. t-value	P	Standardised estimates	SMCs	C.R.	AVE	χ^2	DF	χ^2/DF	GFI	AGFI	RMSEA
CS4	1	-	-	-	.91	.83								
CS5	1.026	.019	55.25	***	.95	.89	.94	.84	0	0	-	-	-	-
CS6	.989	.020	48.63	***	.89	.79								
	+	<	> |1.96|	< .05	> .70	> .50	> .50	> .50	<	>	< 5	> .90	> .90	< .08

4. Consumer Loyalty

The measurement items of consumer loyalty which were adapted by the current research were originally developed by Heere and Dickson (2008), Bodet (2008) and Yoshida and James (2010). There are 7 items within two dimensions: Attitudinal loyalty refers to the consumer's attitude towards being loyal to the CPBL. Behavioural intentions evaluate the behavioural dimension of loyalty.

A. Attitudinal loyalty

The measurement items of attitudinal loyalty are CL1 to CL4. Although Normed Chi-square (χ^2/DF: 28.23) is greater than 5, the fitness of the model is acceptable in this dimension (GIF: .977, AGIF: .884; RMSEA: .149). Chang (2011:104) cited MacCallum and Hong's (1997) suggestion that when there are many estimate items in one dimension, it is not easy to reach .90 in AGFI. Therefore, .80 is an alternative value which can be considered as a judgmental value of AGFI. Apart from some estimates of GOF, other estimates reached a satisfactory level. Figure 19 (in appendix 5) and Table 56 shows the detail of the model estimates, convergent validity, and GOF. Un-standardised estimates are of positive value; standard errors are between .028 and .030 which are small and acceptable in the model estimates. All values of C.R. (t-value) are greater than $|1.96|$ and reached statistical significance. For convergent validity, standardised estimates

(between .80 and .86 > .70), SMCs (between .64 and .74 > .50), C.R. (.901 > .50) and AVE (.694 > .50) are good enough to be retained.

Table 56: The CFA assessment of the Attitudinal loyalty dimension

Model estimates					Convergent validity				GOF					
Item	Unstandardised estimates	S. E.	C.R. t-value	P	Standardised estimates	SMCs	C.R.	AVE	χ^2	DF	χ^2/DF	GFI	AGFI	RMSEA
CL1	1	-	-	-	.82	.66	.90	.69	56.451	2	28.2	.97	.88	.14
CL2	.940	.028	34.09	***	.86	.74								
CL3	1.003	.030	33.62	***	.85	.72								
CL4	.911	.029	31.24	***	.80	.64								
	+	<	> |1.96|	< .05	> .70	> .50	> .50	> .50	<	>	< 5	> .90	> .90	< .08

B. The Behavioural loyalty dimension

The measurement items of behavioural loyalty are CL5, 6 and 7. Un-standardised estimates are of positive values; standard errors are .027 and .029 which are small enough to be acceptable. All values of C.R. (t-value) are greater than |1.96| and reached statistical significance. The smallest standardised estimates are higher than .82 (>.70), the lowest SMCs is over .68 (>.50), C.R. (.893) and AVE (.735) are over .50 (Details are shown in Figure 20 in appendix 5 & Table 57). All items are kept because all indicators are at a good level in terms of model estimate and convergent validity. In general, all estimates are satisfactory in the dimension and all items are kept.

Table 57: The CFA assessment of the Behavioural dimension

	Model estimates				Convergent validity				GOF					
Item	Unstandardised estimates	S. E.	C.R. t-value	P	Standardised estimates	SMCs	C.R.	AVE	χ^2	DF	χ^2/DF	GFI	AGFI	RMSEA
CL5	1	-	-	-	.90	.81								
CL6	1.017	.029	35.32	***	.82	.68	.89	.73	0	0	-	-	-	-
CL7	.983	.027	36.52	***	.85	.72								
	+	<	> |1.96|	< .05	> .70	> .50	> .50	> .50	<	>	< 5	> .90	> .90	< .08

Although some standardised estimates and SMCs in the consumer experience dimension are low, the values are acceptable and so the items can be kept. In the service quality dimension, SQ4, SQ2, SQ6, SQ9, SQ11, SQ1, SQ10 and SQ13 were deleted because convergent validity and GOF are not acceptable when those items are kept. Therefore, the dimension of service quality is measured by 6 items (SQ3, 5, 7, 8, 12 and 14). All other measurement items for the consumer experience, satisfaction, and loyalty dimension appear to show a satisfactory level of model estimates, convergent validity, and GOF. No items have to be deleted in those constructs. The next step is the second order CFA analysis before conducting SEM model analysis.

6.3.2 Second Order CFA

The Second order CFA tests whether the structure between dimensions is supported or fits with the theory. Chang (2011) cited Jöreskog and Sörbom (1992) and Doll et al. (1994) to suggest four steps preceding the test of a second order CFA model. Each step analyses one type of CFA model and the current research has to compare four of them in order to assess which type of structure is appropriate for the model. The first type is a first order type which means that all items are put in the single dimension. The second type model is the first order in multiple dimensions but without correlations between dimensions (dimensions are independent). The third type is the same as the second type but correlations are allowed between dimensions. The last type is the second order CFA model which includes two levels of latent variable. Those types are compared with estimates of GOF so as to identify which type is satisfactory and suitable for

the current research. Meanwhile, second order CFA is also a testing of the accuracy of the theory which is used in the current research.

1. Consumer Experience

There are five dimensions and fifteen items in the consumer experience construct. The current research established five types of CFA models and compared them to determine which one is the most relevant.

A. First order in a single dimension

The assumption of first order in a single dimension is that there is only one dimension in the variable. If the GOF assessments a reach satisfactory level, it means the model has to be reconsidered. Although each of the standardised estimates was higher than .60 and reached statistical significance (see Figure 21), other GOF estimates are not very good ($\chi^2 = 2648.655$, DF= 90, χ^2/DF= 29.430; GFI= .752; AGFI= .669; CFI= .810; RMSEA= .152). The results show that this is not an ideal CFA model and other types of CFA should be considered.

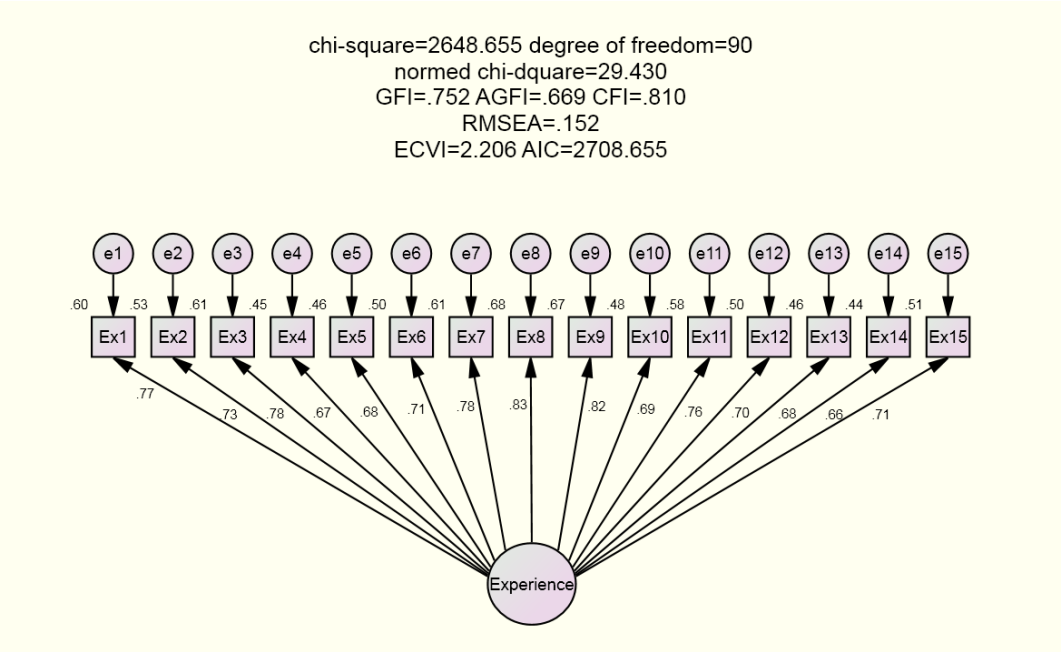

Figure 22: 1st order CFA of Consumer Experience in single dimension

B. First order in five dimensions (no correlations between dimensions)

In this type, items are put back into their original dimensions as recommended by literature. There are five dimensions (SENSE, RELATE, EMOTION, THINK and IMMERSION) and three items in each one. Standardised estimates are between .74 and .94 and reached statistical significance (see Figure 22), but the GOF estimates did not really improve (χ^2 = 4077.663, DF= 90, χ^2/DF= 45.307; GFI= .628; AGFI= .504; CFI= .703; RMSEA= .190). However, correlations can also be added into the model in order to assess the GOF of the model.

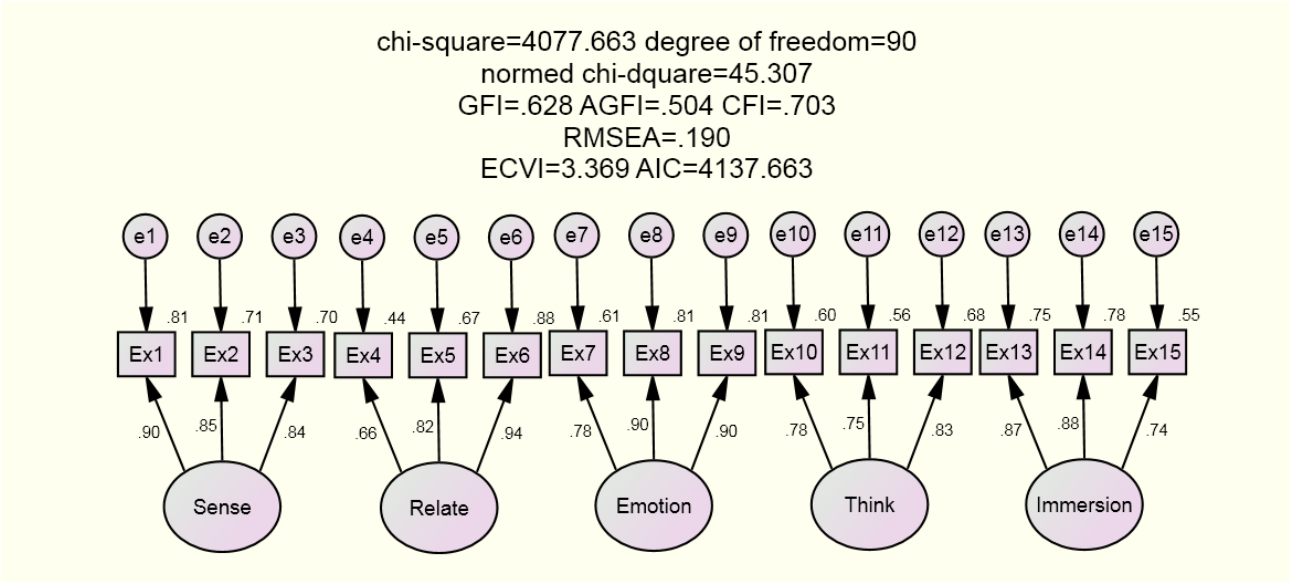

Figure 23: 1st order CFA of Consumer Experience in 5 dimensions (without correlation)

C. First order in five dimensions (with correlations between dimensions)

For this type with five dimensions with correlations, most GOF estimates are satisfactory (GFI= .947; AGFI= .921; CFI= .969; RMSEA= .065). Chi-square and degree of freedom are not acceptable (χ^2 = 501.217, DF= 80, χ^2/DF= 6.265). However, Wheaton (1987), Hayduk (1988), and Hair, et al. (2010:666) explained that those estimates could be easily influenced and distorted by the sample size. Thus, only GFI, AGFI, CFI, and RMSEA are considered in the process of second order CFA analysis. On the other hand, the correlations between the five dimensions are from .61 to .82, which means there is a potential higher rank latent variable that

can be set in the model (Detail is shown in Figure 23).

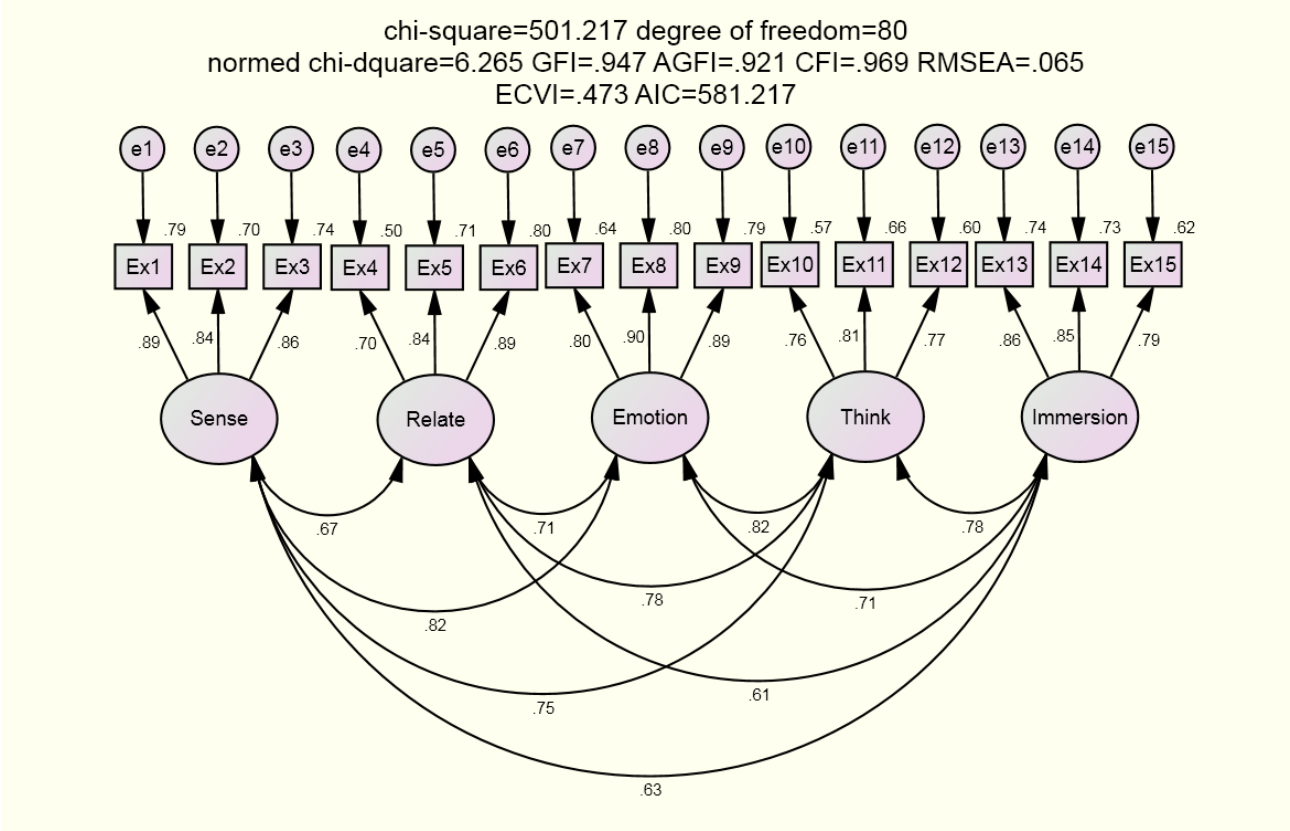

Figure 24: 1st order CFA of Consumer Experience in 5 dimensions (with correlation)

D. Second order

In the second order of CFA analysis (see Figure 24), items' standardised estimates of the SENSE, RELATE, EMOTION, THINK and IMMERSION dimension are greater than .70 and reach statistical significance. All standardised estimates for each dimension are over .79 and all of them are significant. The estimates of GOF, GFI (.944>.80), AGFI (.916>.80), CFI (.963>.90) and RMSEA (.069<.08) reached a satisfactory level which means that the model is suitable for SEM analysis and consistent with the theory. Comparing the four types of model and null model (see Table 58), model 3 reaches a satisfactory level of estimates and there are high correlations between dimensions. Therefore, it is clear that the second order model (model 4) should be accepted in terms of GOF assessments and conformation to the theory. The second order model

of consumer experience can be used for SEM analysis.

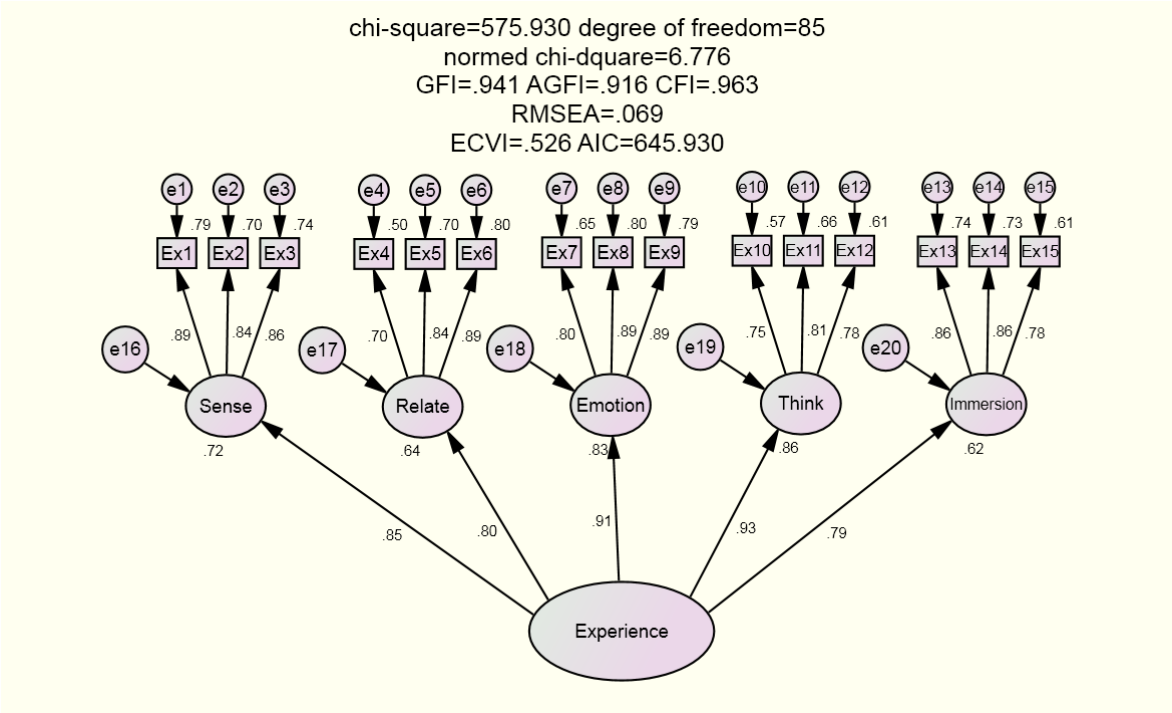

Figure 25: 2nd order CFA of Consumer Experience

Table 58: The second order CFA assessment of the Consumer Experience construct

Second order	χ^2	DF	χ^2/DF	GFI	AGFI	CFI	RMSEA
0 Null model	13538.08	105	128.93	.194	.079	.000	.323
1 First order one dimension	2648.66	90	29.43	.752	.669	.810	.152
2 First order five dimensions (No correlation)	4077.66	90	45.31	.628	.504	.703	.190
3 First order five dimensions (With correlation)	501.22	80	6.27	.947	.921	.969	.065
4 Second order	575.93	85	6.78	.941	.916	.963	.069
Suggested value	<	>	< 5	> 0.9	> 0.8	> 0.9	< .08

2. Service Quality, Consumer satisfaction and loyalty

Kline (1998:199) explained that three conditions are required to conduct a second order CFA model analysis: (1) three first order CFA dimensions are needed; (2) each dimension includes at

least 2 items and (3) at least one dimension's loading between the first and second order CFA models should be fixed as 1. Chang (2011) explained that if there are only two dimensions in the dimension, the second order CFA analysis can be skipped and the dimension can directly be transformed into the SEM model for analysis. Alternatively, if the correlation coefficients between dimensions are high, all dimension loadings of second order CFA model can be set as 1 in un-standardised estimate so as to conduct the second order CFA analysis. There is only one dimension in the service quality construct and two dimensions in the consumer satisfaction and loyalty construct. Therefore, the second order CFA analysis of service quality cannot be conducted. As the consumer satisfaction and loyalty constructs have two dimensions each it is not necessary to conduct a second order CFA analysis. However, these construct models are still tested upon the four types of CFA model so as to increase the validity of the model.

There are six items in the consumer satisfaction dimension. Figure 25, 26, and 27 (in appendix 5) demonstrated the three types of first order CFA model. The GOF assessments are poor which means that the second order CFA model should be considered. Meanwhile, Chang (2011) suggested that when the correlations between dimensions are strong, a second order CFA analysis can be conducted. Therefore, the un-standardised estimates of the dimension loadings between dimensions and the second order latent are set as 1 in order to conduct the analysis. The result shows (see Table 59) that all GOF estimates are similar to the first order for consumer satisfaction with two correlated dimensions ($\chi^2 = 24.068$, DF= 8, χ^2/DF= 3.009; GFI= .994; AGFI= .983; CFI= .998; RMSEA= .040). It means that the dimensions of consumer satisfaction can be constructed and considered as a second order CFA form in the model. The standardized estimates of the second order CFA were over .89 (high dimension loadings) and reached statistical significance (see Figure 28). The construct of consumer satisfaction can be then used for the SEM analysis.

As for the construct of consumer loyalty, it is not necessary to conduct a second order CFA analysis. However, this construct is still tested upon the four types of CFA model so as to

increase the validity. The results from the three types of first order models (see Figure 29, 30 & 31 in appendix 5) show that second order CFA could exist in the model. The GOF estimates (see Figure 32 in appendix 5) are similar to the first order with two correlated dimensions (GFI= .979; AGFI= .954; CFI= .987; RMSEA= .070). Standardised estimates are greater than .70 and reached statistical significance. According to all estimates and the comparison of five of the models (including the null model) in Table 60, the second order model is the most suitable model for the SEM analysis.

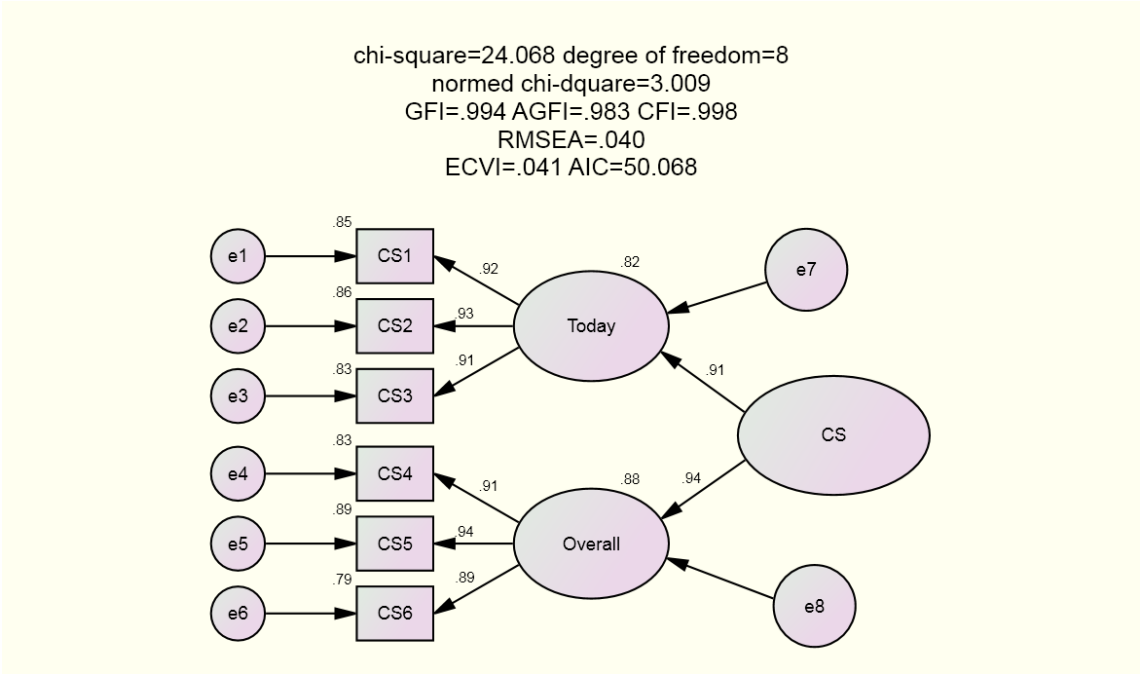

Figure 29: 2nd order CFA of Consumer Satisfaction

Table 59: The second order CFA assessment of Consumer Satisfaction construct

Second order	χ^2	DF	χ^2/DF	GFI	AGFI	CFI	RMSEA
0 Null model	8009.01	15	533.93	.25	.04	.00	.65
1 First order one dimension	951.17	9	105.69	.73	.38	.88	.29
2 First order five dimensions (No correlation)	1295.63	9	143.96	.82	.57	.83	.34
3 First order five dimensions (With correlation)	24.07	8	3.01	.99	.98	.99	.04
4 Second order	24.07	8	3.01	.99	.98	.99	.04
Suggested value	<	>	< 5	> 0.9	> 0.8	> 0.9	< .08

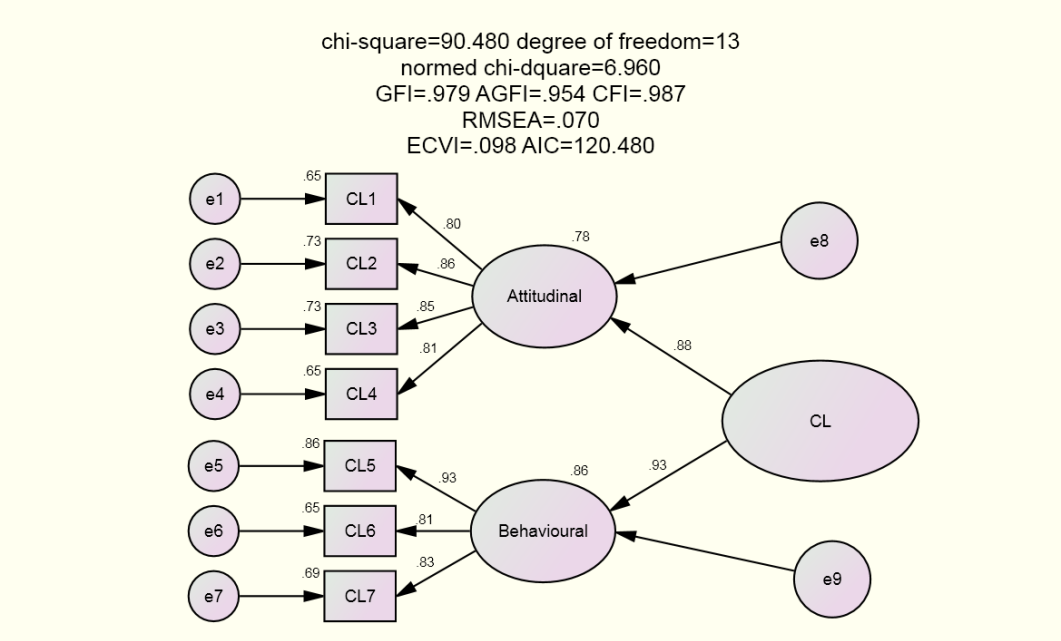

Figure 33: 2nd order CFA of Consumer Loyalty

Table 60: The second order CFA assessment of Consumer loyalty construct

Second order	χ^2	DF	χ^2/DF	GFI	AGFI	CFI	RMSEA
0 Null model	6198.76	21	295.18	.29	.05	.00	.48
1 First order one dimension	678.54	14	48.47	.82	.65	.89	.19
2 First order five dimensions (No correlation)	1061.68	14	75.83	.85	.70	.83	.24
3 First order five dimensions (With correlation)	90.48	13	6.96	.97	.95	.98	.07
4 Second order	90..48	13	6.96	.97	.95	.98	.07
Suggested value	<	>	< 5	> 0.9	> 0.8	> 0.9	< .08

6.4.3 The Bollen's two-step factor analysis

After assessing the relationships between items and dimensions by conducting first order CFA, the relationships between dimensions and variables can be assessed by conducting second order CFA. Bollen (1989) suggested that a two-step factor analysis is able to recommend the application of a SEM analysis to the model. The first step consists of changing all endogenous variables into exogenous variables. Endogenous variables are explained by one or more variables in a model (i.e. consumer satisfaction and loyalty in the current research model). Exogenous variables are not explained by other variables in a model (i.e. consumer experience and service quality in the current research model). The following step consists of setting all variables as second order CFA models to evaluate the multi-collinearity and offending estimate. Chang (2011) estimated that correlations between .30 and .75 are normal. If a correlation is higher $\geq$ .85, there is a problem of multi-collinearity. However, he also claimed that if the correlation is over .85 but with a causal relationship between variables, the multi-collinearity does not exist. According to the results of Table 61, the GOF in CFI (.922 $>$ .90) and RMSEA (.064 $<$.08) reached a good level, but GFI (.869 $>$.80) and AGFI (.853 $>$.80) are only acceptable (AGFI should ideally be over .90, but cited MacCallum and Hong (1997) considered that .80 is an alternative judgmental value if there are many questionnaire items). On the other hand, as χ^2 and χ^2/DF are negatively affected by the large size of the sample the estimates are not considered in the goodness of fit at this stage. They will be corrected by the Bollen-Stine p-value correction method later in the analysis. Generally, the GOF estimates are acceptable in the CFA model. As for multi-collinearity (see Figure 34 in appendix 5 & Table 62), most correlations are between .613 and .825 which is high but still lower than .85. Although the correlations between consumer experience and consumer satisfaction (.897), consumer satisfaction and consumer loyalty (.860) are higher than .85, there are hypothesised to be causal relationships, which mean that multi-collinearity is not seen as a problem in the analysis.

Table 61: The model assessment of the Bollen two steps factor analysis

	χ^2	DF	χ^2/DF	GFI	AGFI	CFI	RMSEA
CFA model	3198.34	531	6.02	.86	.85	.92	.06
Suggested value	<	>	<5	>.9	>.8	>.9	>.08

Table 62: Multi-collinearity assessment

Variables	Pearson Correlation
Consumer Experience <--> Service Quality	.738
Service Quality <--> Consumer Satisfaction	.720
Service Quality <--> Consumer Loyalty	.613
Consumer Experience <--> Consumer Satisfaction	.897
Consumer Experience <--> Consumer Loyalty	.825
Consumer Satisfaction <--> Consumer Loyalty	.860

In the second step of Bollen's factor analysis (see Figure 35 in appendix 5) a SEM model is set in order to assess the Modification Index (MI). MI provides a simple justification considering correlations between any pair of parameters to improve the GOF of the model. Chang (2011:200) suggested that when MI is lower than 50, it can be ignored; when MI is between 50 and 100, it is not necessary to change anything, but when MI is greater than 100, it means that there is a wrong setting in the model. The MI results show that the largest MI is 125.716 for SQ7 which means it could be modified in the model. Although the service quality's first order CFA is satisfactory, SQ7 is deleted because MI is larger than 100. The first order CFA of service quality and the Bollen two-step factor analysis are reassessed following this deletion. Figure 36 (in appendix 5) shows the results of the first order CFA whose estimates are satisfactory (no negative unstandardised estimates, S.E. are small and all C.R. t-values reached statistical significance), convergent validity (most standardised estimates are greater than .70, only one SMCs is lower than .50, C.R. is higher than .50 and AVE is higher than .50) and GOF (GFI: .991, AGFI: .978, RMSEA: .052) are satisfactory. In the first step of the Bollen factor analysis (see Figure 37 in appendix 5, Table 63, & 64), not only are all goodness of fit estimates improved, but they also

meet the minimum required values (χ^2/DF: 3.80< 5; GFI: .914> .90; AGFI: .900> .80; CFI: .959 > .900; RMSEA: .048< .08). The correlations between all variables have slightly changed (between .566 and .898) and there is no obvious multi-collinearity (see Table 65 & Figure 37). However, common method variance (CMV) is tested and discussed in the later section because the correlations are considerably high (all values are greater than .50) .The MI values in the second step of the Bollen factor analysis (see Figure 38) are less than 50 which means the data do not need to be modified.

Table 63: The CFA assessment of the Service Quality factor (Revised)

Dimension	Model estimates					Convergent validity				GOF					
	Item	Unstandardised estimates	S. E.	C.R. t-value	P	Standardised estimates	SMCs	C.R.	AVE	χ^2	DF	χ^2/DF	GFI	AGFI	RMSEA
	SQ3	1	-	-	-	.71	.52								
	SQ5	.838	.036	23.40	***	***.65***	.69								
	SQ8	.974	.031	31.16	***	.80	.65	.86	.55	25.946	6	4.32	.99	.97	.05
	SQ12	1.063	.032	32.71	***	.83	***.42***								
	SQ14	.960	.036	26.92	***	.72	.50								
		+	<	> |1.96|	< .05	> .70	> .50	> .50	> .50	<	>	< 5	> .90	> .90	< .08

Table 64: The model assessment of the Bollen two steps factor analysis (Revised)

	χ^2	DF	χ^2/DF	GFI	AGFI	CFI	RMSEA
CFA model	1837.46	484	3.80	.91	.90	.95	.04
Suggested value	<	>	<5	>.9	>.8	>.9	>.08

Table 65: Multi-collinearity assessment (Revised)

Variables	Pearson Correlation
Consumer Experience <--> Service Quality	.695
Service Quality <--> Consumer Satisfaction	.677
Service Quality <--> Consumer Loyalty	.566
Consumer Experience <--> Consumer Satisfaction	***.898***
Consumer Experience <--> Consumer Loyalty	.825
Consumer Satisfaction <--> Consumer Loyalty	***.860***

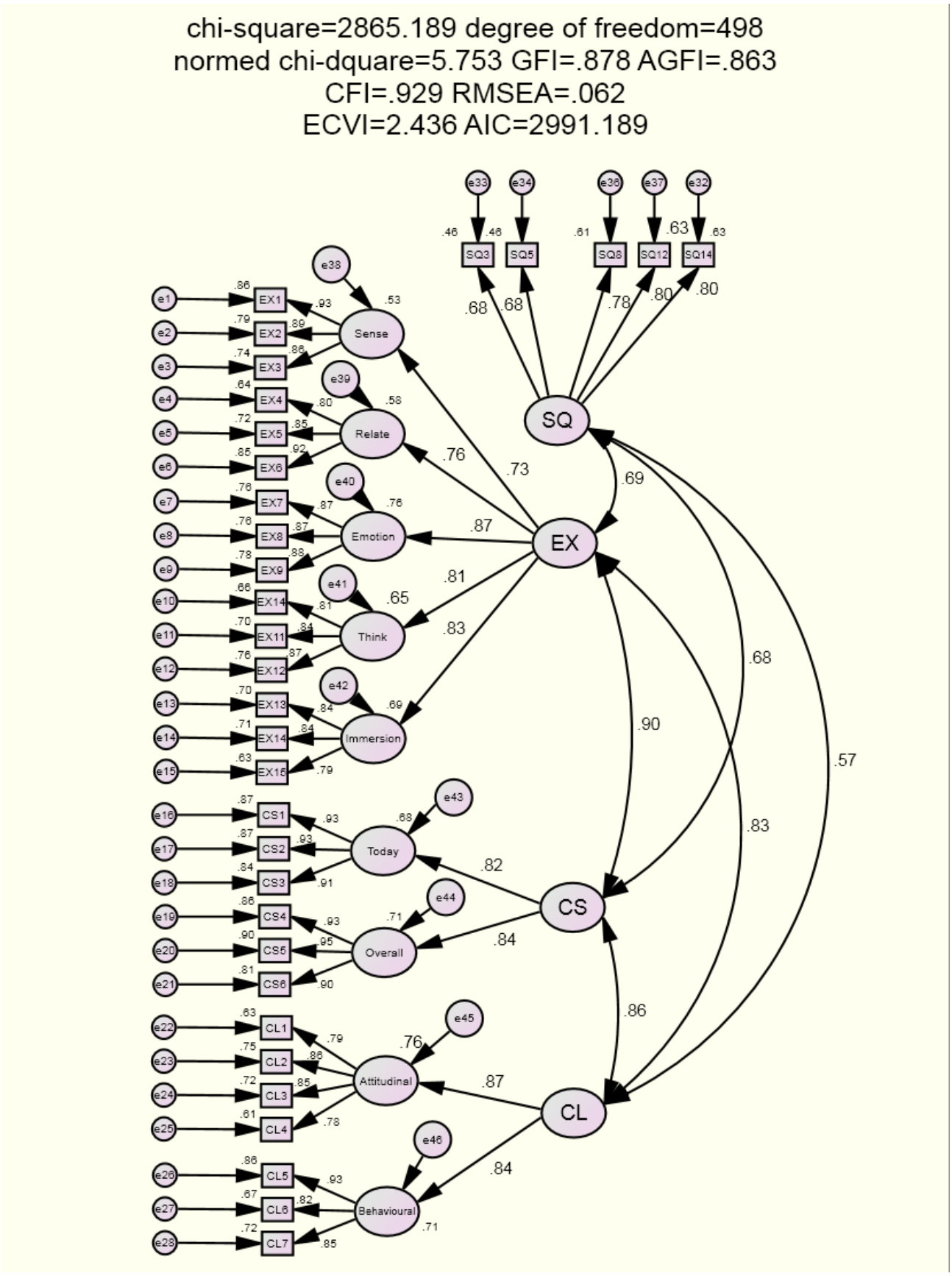

Figure 37: Assessment of multi-collinearity (Revised)

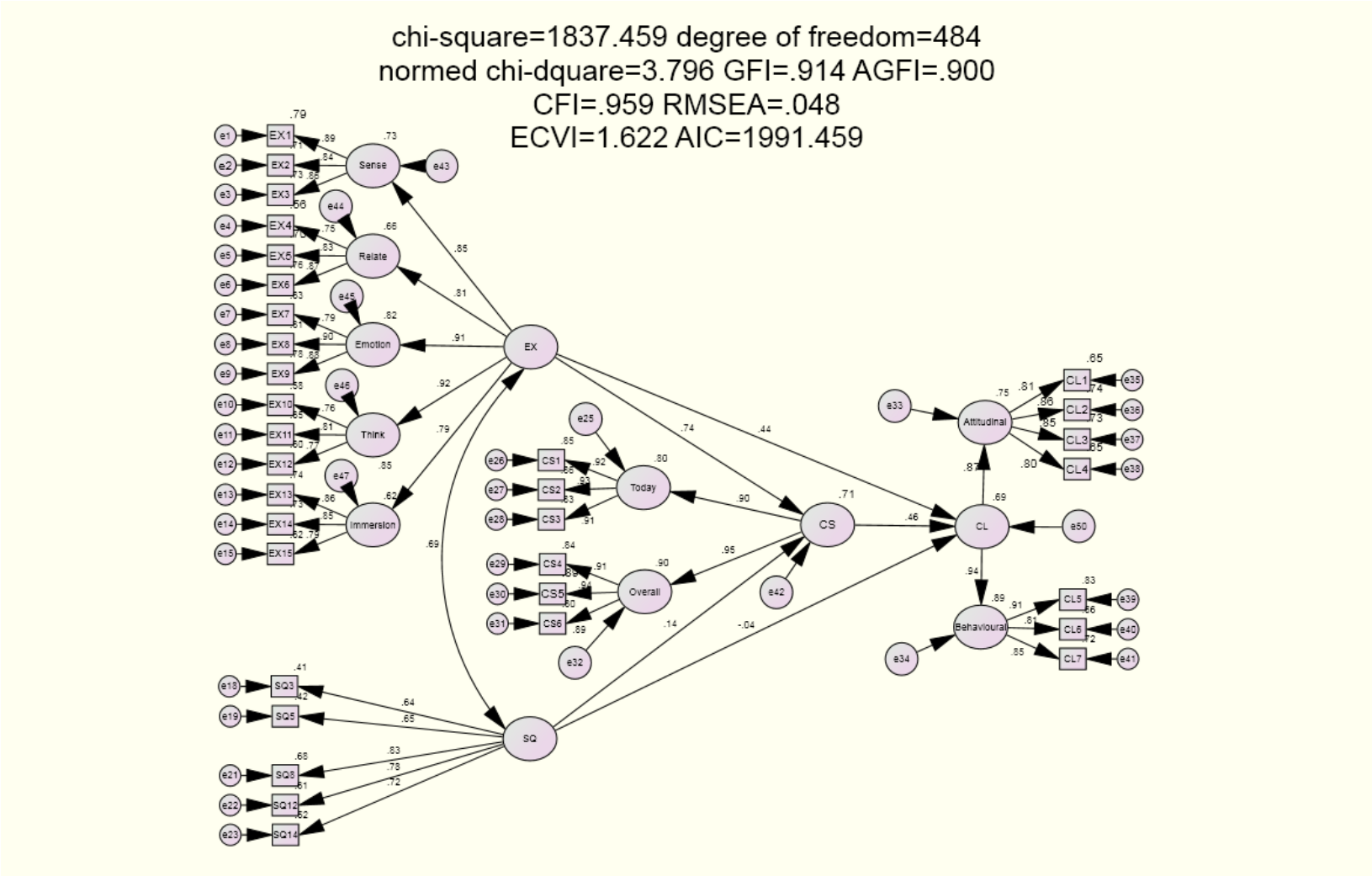

Figure 38: The Bollen two steps factor analysis (SEM model) (Revised)

6.4.4 Assessment of normality

There are two types of normality which are usually considered in research using structural equation modeling approaches (Kline, 1998: 81): univariate normality and multivariate normality. If the data do not meet univariate and multivariate normality, it means that there are outliers in the data. Sample size could also be a factor explaining why multivariate normality is not met. Other assessment methods could be then considered (e.g., boot-strap methods) in order to reduce the effect of the big sample size. If the outcome of such methods cannot support multivariate normality, outliers should be deleted by calculating Mahalanobis distance (Chang, 2011) in order to fit two types of normality.

1. Univariate normality

Mardia (1985) explained that when the values of Skewness and Kurtosis are in the range of ± 2, the data have reached univariate normality. Byren (2010:103) indicated that when the value of Skewness is between ± 3 and Kurtosis is between ± 7, the data can be seen as normal. The absolute values of Skewness and Kurtosis in the current research are smaller than 2 (see Table 66 in appendix 5). This means that the data fits the univariate normality criteria.

2. Multivariate normality

Maximum likelihood (ML) is the most common estimation method for SEM analyses (Wu, 2009:4). When ML is conducted, multivariate normality becomes an important assumption (Ding, Velicer & Harlow, 1995; Byren, 2010:102). Mardia's multivariate Skewness and Kurtosis values represent classical estimations. When the value is smaller than $\rho * (\rho + 2)$ (ρ is the number of observed variable). Although Mardia and Foster (1983) developed a standard method for assessing multivariate normality, Bentler (2005) claimed that if the sample is large, Mardia's test may not be accurate (Byrne, 2010:104). According to Bentler's (2005) point of view, when the C. R. index of Mardia's multivariate Kurtosis is greater than 5.00, the data are not normally distributed. Table 67 (in appendix 5) shows the C. R. value of Mardia's multivariate Kurtosis is

232.428 which do not meet the multivariate normality criterion.

When data deviate from multivariate normality, other estimation techniques such as Weighted Least Squares (WLS), Generalised Least Squares (GLS), and Asymptotically Distribution Free (ADF) are alternative options. For the ADF technique, the sample size requires a large number so as to have a result which can be trusted (Hair et al., 2010:633; Chang & Cheng, 2012:57). Chang (2011:93) noted that the sample size is better when larger than 2,000, but Byrne (2010:105) supported the position of West et al. (1995) that 1,000 for a sample size is good enough for the ADF technique. Byrne also noted Raykov and Marcoulides' (2000) suggestion that the minimum sample size should be at least greater than 10 times the number of estimated parameters. However, there is a tricky phenomenon, mentioned by Micceri (1989), that if the sample size is over 400, the data will fail to follow either a univariate or multivariate normal distribution (Byren, 2010:329). Although bigger samples are better for data to meet multivariate normality, the opposite effect can happen if the sample size is too big. Therefore, Hair, et al. (2010:622) suggested that the ideal sample size to prevent the data not satisfying multivariate normality criteria is between 100 and 300.

Byren (2010:330) cited West et al. (1995), Yung and Bentler (1996) and Zhu (1997), and described that the bootstrap method is a common way of dealing with non-multivariate normality. The bootstrap method is a multi-functional method for estimating the sampling distribution of parameter estimates and acquiring robust estimates of standard errors and confidence intervals. Approximate standard errors can be found by using the bootstrap method. Chang (2011:93) indicated that the bootstrap method can be conducted when the sample is small and difficult to collect, data cannot be deleted or transformed, or the sample size is not big enough (the minimum should be at least 100).

The sample size of the research is less than 2000 and made of four clubs, it is not big enough for the ADF technique. Therefore, the research used the bootstrap method to evaluate the dependability of the ML method when data deviate from multivariate normality. In Table 68,

SE-SE refers to the difference of standard error and SE-Bias stand for the difference of estimates between the bootstrap and ML method. Chang (2011:223) explained that if the values of SE-SE and SE-Bias are small, it means that there is no difference between the ML and bootstrap methods. In other words, small values of SE-SE (between .00 and .01) and SE-Bias (.001) reveal a strong reliability of the ML method even if the data do not fit with multivariate normality. In conclusion, although Mardia's multivariate Kurtosis shows that if the data do not conform to multivariate normality criteria, the bootstrap method provides another way of testing it. The results of the bootstrap method indicated that the data display satisfactory levels regarding the multivariate normality criteria.

Table 67: Summary of the multivariate normality analysis (bootstrap method)

Parameter	SE	SE-SE	Mean	Bias	SE-Bias
Consumer Experience <--> Service Quality	.022	.000	.696	.001	.001
Service Quality <--> Consumer Satisfaction	.026	.001	.678	.001	.001
Service Quality <--> Consumer Loyalty	.029	.001	.566	.000	.001
Consumer Experience <--> Consumer Satisfaction	.021	.000	.897	-.001	.001
Consumer Experience <--> Consumer Loyalty	.025	.001	.824	-.001	.001
Consumer Satisfaction <--> Consumer Loyalty	.024	.001	.859	-.001	.001

6.4.5 Assessment of the common method variance (CMV)

Chang (2011:151) explained that CMV is a multi-method to assess systematic error. CMV may occur during the process of designing instruments or collecting data. It usually causes the correlations between dimensions to be over or under-estimated so as to fall into type I or II error (Podsakoff & Organ, 1986; Bagozzi & Yi, 1990; Avolio, et al., 1991; Podsakoff, et al., 2003). Although CMV cannot be avoided during the development of the instrument and the data collection, it can also be assessed after the data have been collected by conducting Harman's single-factor test and CFA analysis. As some correlations between variables are over .85, CMV

should be tested in order to examine the possibility of multi-collinearity. First, Harman's single-factor test is going to evaluate CMV in the current research. The purpose of this test is to assess the possibility of variance explained centralised in one factor loading (Peng, et al., 2006). The result (see Table 69) shows that all the variance explained is only in two dimensions loadings which are less than the number of dimensions in the model (it should be 14 factors). This means CMV exists in the current research. However, Peng, et al. (2006) indicated that single-factor test has been widely used as a main tool of assessing CMV, but the test has its own problem. Single and multiple factor CFA are other common ways for evaluating CMV. Chang (2011:167) claimed that this method tries to compare the single and multiple factor CFA in order to assess if the difference of χ^2 is statistically significant (if $p < .001$). This means CMV may not exist or it may occur but without seriously influencing the outcome of the data analysis. In the single factor CFA (see Figure 39), all items are put in one factor and GOF is assessed ($\chi^2 =$ 2007.823; DF = 77; $\chi^2/\mathrm{DF} =$ 26.08; p = .000; GFI = .772; AFGI = .690; CFI = .829; RMSEA = .143). On the other hand, the multiple factor of CFA model is such that the numbers of items with factors are set upon the theory. The results of GOF are shown in Figure 40 ($\chi^2 =$ 892.080; DF = 75; $\chi^2/\mathrm{DF} =$ 11.89; p = .000; GFI = .906; AFGI = .896; CFI = .927; RMSEA = .094). The difference of χ^2 in the current research is statistically significant ($\Delta\chi^2 =$ 1115.743; $\Delta\mathrm{DF} = 2$; p = .000 < .001). According to Harman's single-factor test and single and multiple dimensions CFA, CMV came up in the current research but the effect does not significantly influence the estimates between variables and the outcome of the analysis.

Table 68: Assessment of the common method variance (CMV)

	Initial Eigenvalues			Extraction Sums of Squared Loadings		
Component	Total	% of Variance	Cumulative %	Total	% of Variance	Cumulative %
1	7.597	54.264	54.264	7.597	54.264	54.264
2	1.495	10.677	64.941	1.495	10.677	64.941
3	.722	5.155	70.096			
4	.615	4.390	74.486			
5	.602	4.302	78.788			
6	.498	3.559	82.347			
7	.441	3.147	85.494			
8	.425	3.037	88.531			
9	.336	2.398	90.929			
10	.318	2.269	93.197			
11	.275	1.965	95.162			
12	.249	1.780	96.942			
13	.245	1.750	98.692			
14	.183	1.308	100.000			

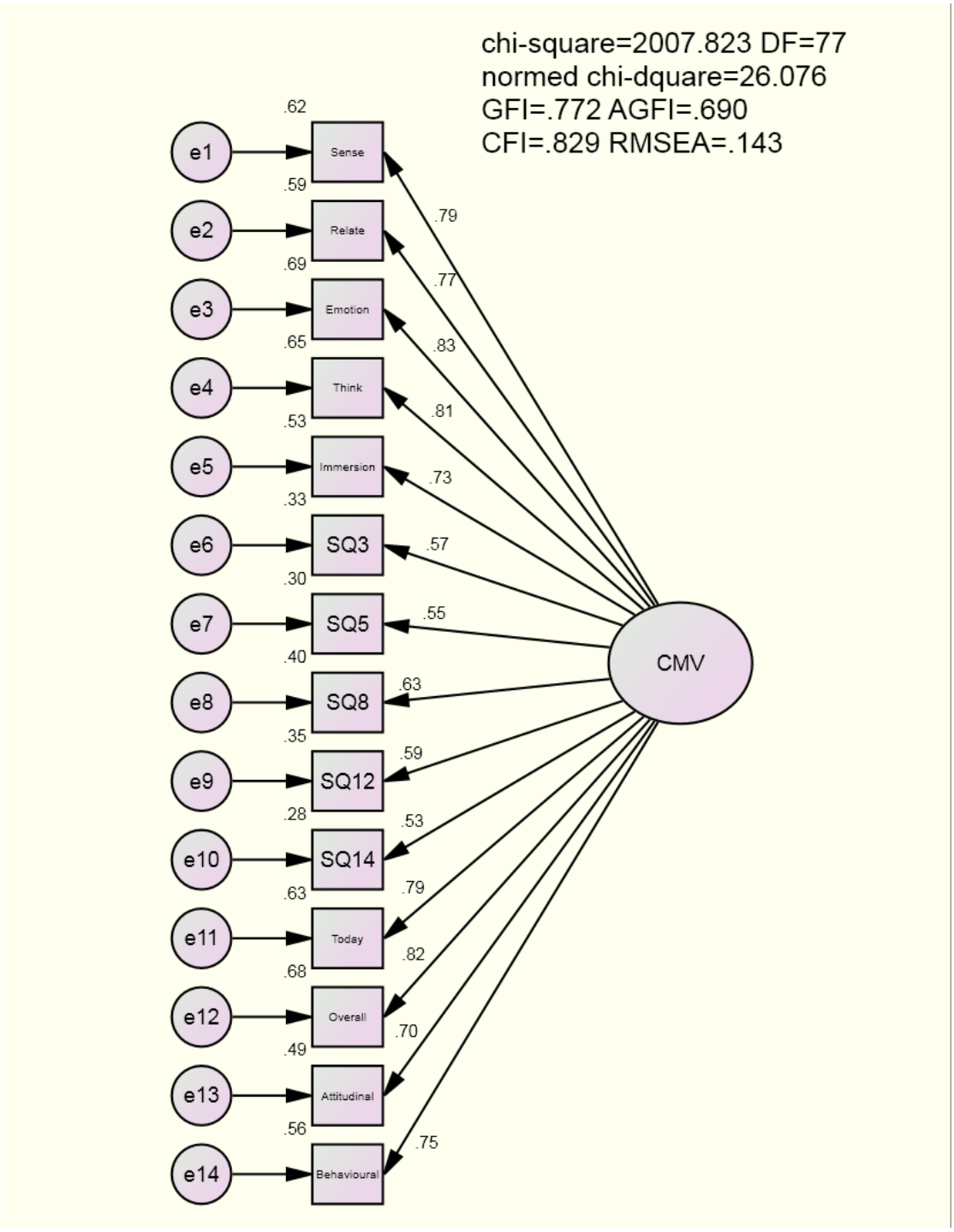

Figure 39: Single factor CFA model of the common method variance (CMV)

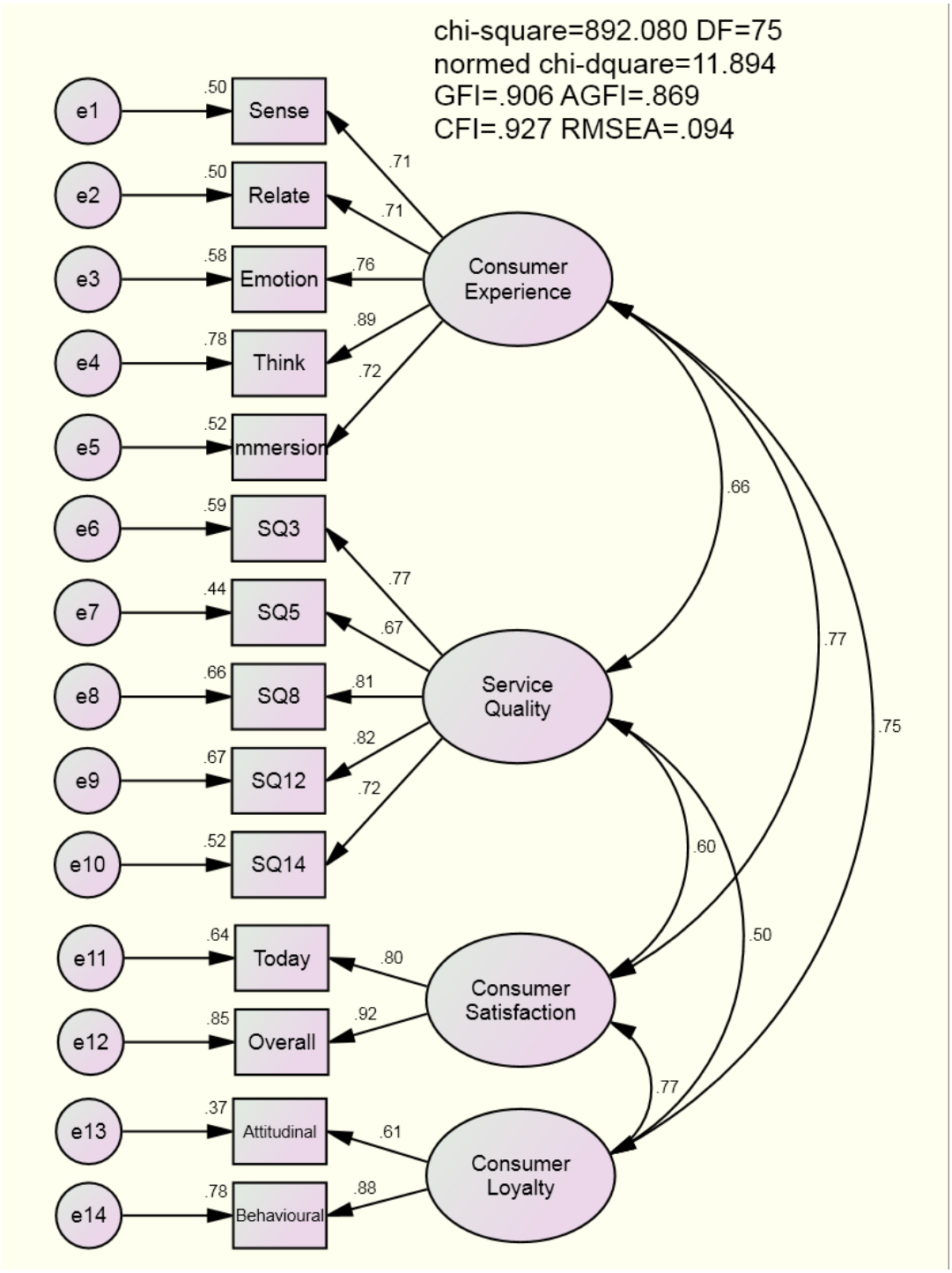

Figure 40: Multi-factor CFA model of the common method variance (CMV)

6.4.6 Assessment of fit of internal structure of a model (Reliability and Validity)

Wu (2009:88) explained that focusing on reliability and validity of the model represents the assessment of the quality of the model's internal structure. These assessments include the evaluation of measured and structural models. Measured model refers to the measured items and dimensions for each variable. Structural model refers to the relationships between variables. Bagozzi and Yi (1988) suggested that the assessment of fit of the model's internal structure does not only focus on reliability and validity, but also on three other criteria that should be considered. The research recognises two different types of reliability and validity criteria (Individual item, construct reliability, convergent and discriminant validity,) and then considers three more criteria which are significant parameter estimates, standardised residuals, and modification indices (Fornell & Larcker, 1981; Wu, 2009:89-90; Hair, et al., 2010).

1. Reliability

A. Individual item reliability

Square Multiple Correlations (SMCs, R^2) are referred to as item reliability of factor loadings between items and constructs. Factor loadings should be statistically significant (p ≤.05; absolute value of t is greater than 1.96) and a value ≥.70. It is equal to the value of SMCs ≥.50 (Wu, 2009:90; Hair, et al., 2010: 708).

B. Construct reliability, C.R.

Hair et al. (2010:708) described that one of the primary objectives of CFA/SEM is to assess the construct validity of a proposed measurement theory. The construct reliability of a latent variable is also called composite reliability and evaluates the level of consistency between a set of latent construct indicators (Wu, 2009:90). CR >.90 is excellent, CR >.80 is very good, and CR >.70 is acceptable. Moreover, it is poor and should be rejected when the value is less than .50 (Kline, 1998). Bagozzi and Yi (1988) and Diamantopoulos and Siguaw (2000) advocated that CR is acceptable when the value is ≥.60. On the other hand, CR can also be

evaluated using the Cronbach's alpha. This should be as least .70 (Hair, et al., 2010:125).

Table 70 shows all criteria for item and construct reliability. For individual item reliability, some SMCs are lower than .50 (between .42 and .40) and some factor loadings are less than .70 (between .65 and .66), but all are statistically significant. However, the statistical significance of EX1, EX4, EX7, EX10, EX13, SQ3, CS1, CS4, CL1, and CL5 do not have to be assessed because those items are set as fixed estimations (Wu, 2009:365). Individual item and construct reliability are tested with the first and second order CFA analysis. The results (see Table 71 in appendix 5) shows that the models satisfy the two types of reliability, even if two factor loadings and SMC values are low.

Table 69: Criteria of individual item and construct reliability

Type of reliability	Criteria
Individual item reliability	SMCs≥ .50 Factor loading ≥ .70 (p ≤ .05)
Construct reliability, C.R.	C.R.> .60

2. Validity

A. Convergent Validity

The items that are indicators of a specific construct should converge or share a high proportion of variance in common. This is called convergent validity. There are four measures of convergent validity (Fornell & Larcker, 1981; Hair, et al., 2010:709)*:* (1) SMCs ≥.50, (2) CR ≥.60, (3) Average variance extracted, AVE ≥.50: AVE is a summary indicator of convergence and a calculation of the mean variance extracted for the items loading on a construct. AVE of .50 or higher is a good rule of thumb suggesting adequate convergence, and (4) Factor loading ≥.70.

B. Discriminant Validity

Discriminant validity refers to the degree to which a construct is truly distinct from other

constructs. There are five measures to evaluate discriminant validity (Fornell & Larcker, 1981; Anderson & Gerbing, 1988; Mallard & Lance, 1998; Torkzadeh, et al., 2003; Hair, et al., 2010:710; Chang, 2011:175-192): (1) Standardised correlation $<$ .85. However, this assessment is not very stable. In some cases, even with correlations higher than .90, significant difference between two models still exists, (2) Comparing the AVE for any pair of constructs with the square of the correlation estimate between those two constructs; (3) Conducting bootstrap. If the standardised correlation does not include value 1 (Bias-corrected Percentile method and Percentile method are used and based on 95% confidence intervals), discriminant validity is not supported; (4) SEM standardised correlation method. This method uses chi-square difference test to assess discriminant validity. When ΔCFI $>$.01, it means that discriminant validity exists in the model. Finally, (5) Comparing ECVI and AIC. ECVI and AIC of the model are estimated by a single factor and then factors are added one by one so as to produce more sets of ECVI and AIC. The values should be reduced when more factors are added into the model.

Table 72 lists the indicators of convergent and discriminant validity. For convergent validity, most indicators are the same as individual item and construct reliability, but AVE is also considered. The AVE for each factor is over .55, which means convergent validity is reached (see Table 73). For discriminant validity, there are only two standardised correlations higher than .85 (Consumer Experience <--> Consumer Satisfaction: .898; Consumer Satisfaction <--> Consumer Loyalty: .860), and other correlations are between .566 and .825. This shows that parts of the model do not fully meet the discriminant validity criteria. Moreover, the result of the AVE comparison (see Table 74) also shows that the AVE of consumer experience (.653) is lower than the correlation between consumer experience and consumer loyalty (.681), and that the AVE of consumer loyalty (.739) is lower than the correlations between consumer satisfaction and loyalty (.740). Both the AVE of consumer satisfaction (.693) and loyalty (.739) are lower than the square of the correlation (.740). However, Chang (2011:175 & 184) claimed

that it is too subjective to assess discriminant validity by standardised correlations and comparing AVE. It should therefore be evaluated alongside other methods. The third method for evaluating discriminant validity is using the bootstrap method to assess the confidence intervals of standardised correlation between variables. If the values of confidence intervals (based on 95%) are not included 1 in point estimation, Bias-corrected Percentile accelerated (BCa) method, all dimensions have researched discriminate validity (see Table 75 in appendix 5). The fourth way of assessing discriminate validity is the SEM standardised correlation method of which the result is shown in the Table 76 (in appendix 5). The differences of x^2 in standardised correlations are between 103.03 and 908.23 ($\Delta x^2 > 3.84$) and were statistically significant ($p < .05$). This means that all dimensions demonstrate a discriminate validity from a statistical point of view. Moreover, practical significance is reached when the differences of CFI between correlations are over .01 (ΔCFI $>$.01) and adjusted p-value lower than .0083. (Significant level of SEM standardised correlation method should be adjusted by Bonferroni correction; there are 4 variables in the model. The new significant level is $4\times3\div2=6$, $.05\div6=.0083$) (Cheung & Rensvold, 2002; Byrne, 2010). According to Table 77 (in appendix 5) when there is one factor in the model, AIC is 2063.82 and ECVI is 1.681. If there are only two and three factors in the model, AICs are between 1000.022 and 2074.057 and ECVIs are between .814 and 1.689. AIC is 9.52.08 and EVCI is .775, when there are four-factors on the model. It is clear that when more factors are added, the value of AIC and ECVI are significantly reduced, which supports the discriminant validity between the factors (Chang, 2011:176).

Table 71: Criteria of convergent and discriminant validity

Type of validity	
Convergent validity	SMCs ≥ .50, C.R. ≥ .60 AVE ≥ .50 Factor loading ≥ .70
Discriminant Validity	Standardised correlation < .85 AVE > correlation^2 Bootstrap: BCa and Percentile method≠ 1 SEM Standardised correlation≠ 1 Comparing ECVI and AIC

Table 73: Discriminant validity (Compared AVE method)

	Consumer Experience	Service Quality	Consumer Satisfaction	Consumer Loyalty
Consumer Experience	.653			
Service Quality	.483	.559		
Consumer Satisfaction	.518	.458	.693	
Consumer Loyalty	***.681***	.320	***.740***	.739

C. Significant parameter estimates

Bagozzi and Yi (1988) advocated that all parameter estimates should reach statistical significance (p <.05 or an absolute value of t greater than 1.96) in order to confirm hypothesises of the model. Wu (2009:89) explained that when all parameter estimates in a measured model are significant, it means the measurement of the construct is correctly reflected by indicators, which therefore provides evidence of validity. Table 78 (in appendix 5) shows the parameter estimate of each dimension in the SEM analysis. Except for the estimate of SQ→CL which is not significant, the other estimates are significant and with small standard error.

Table 77: Significant parameter estimates

Construct	Standardised estimates (Factor loading)	Unstandardised estimates	S.E.	C.R. (t-value)	p-value
EX→CS	.63	.893	.046	19.214	***
EX→CL	.40	.475	.058	8.203	***
EX→Sense	.87	1	-	-	-
EX→Relate	.81	.979	.039	24.824	***
EX→Emotion	.91	1.039	.036	29.072	***
EX→Think	.93	1.004	.041	24.483	***
Ex→Immersion	.79	1.061	.045	23.803	***
SQ→CS	.19	.142	.033	4.312	***
SQ→CL	.05	-.041	.031	-1.313	.189
CS→CL	.35	.413	.046	9.022	***
CS→Today	.90	1	-	-	-
CS→Overall	.95	1.020	.029	35.469	***
CL→Attitudinal	.87	1	-	-	-
CL→Behavioural	.94	1.008	.038	26.794	***

D. Standardised residuals

Standardised residuals represent another good indication of the internal quality of a model (Bagozzi & Yi, 1988; Wu, 2009:93). The absolute value of standardised residuals is smaller than 2.58 (critical value of Z, when α =.01) which is suggested by Wu (2009) or 1.96 (critical value of Z, when α =.05). If a model is appropriately designed with a big sample, the standardised residuals must be in the standard normal distribution and the absolute value should be smaller than 2. In the current research's model, most values are lower than 2.85.

E. Modification indices, MI

Chang (2011:200) claimed that when MI is greater than 100, it means that there is a wrong setting in the model. In this situation, the model should be fixed in order to improve its internal quality. The model has been fixed by assessing MI during the stage dealing with the Bollen two-step factor analysis which means that there is no index of MI that is larger than 50

in the research data.

The main purpose of evaluating model's internal structure is to evaluate the causal relationships which are built by the research. There are three aspects of diagnosing a structural model: First, path estimated directions should match the expectations which are grounded in the research. Second, all path estimates must reach statistical significance ($p < .05$, absolute value of t is greater 1.96). Last, all SMCs (R^2) should have no negative error variances and the values should be as high as possible within statistical significance. Regarding the correlation between service quality and consumer loyalty, which did not reach statistical significance, the structural model's internal quality satisfies our expectations. The data analysis considered individual item reliability and construct reliability via the assessment of SMCs, factor loading and C.R. Although few standardised correlations and AVE did not conform to the reference values, discriminant validity is demonstrated based on the results the bootstrap method, the comparison of the SEM standardised correlations and the ECVI and AIC values. All parameter estimates are significant and MI are lower than 50. Therefore, the internal quality of the model is demonstrated. Wu (2009:95) provides two check-lists of basic and internal fitness (see Table 88 and 89):

Table 78: Items of SEM basic fitness and standard

Items	standard	Result
Variances estimates	There is no negative value	YES
Factor loading	between .50 and .95	YES
S.E.	as small as possible	YES

Table 79: Items of SEM internal fitness and standard

Items	standard	Result
Parameter estimates	$p < .05$, absolute value of t is greater 1.96	NO
Individual item reliability	>.50	YES
AVE	>.50	YES
C.R.	>.60	YES
Standardized residuals	< |2.58|	NO
MI	<50	YES

6.4.7 Offending Estimate

Wu (2009:65), Byrne (2010:67) and Hair, et al. (2010:706) explained that the feasibility of estimation should be considered before checking the goodness of fit (GOF) indices of the model. There are three major criterions for reviewing parameter estimates.

1. Negative error variances (Heywood case)

An error variance estimate is produced in the negative level (less than zero) and is called the Heywood case. In most situations, a small value of error variance is better and the minimum is zero. However, if the sample size is over 300 and the scale follows the three-indicator rule (a congeneric model has at least three significant indicators), the Heywood case is unlikely to occur (Hair, et al., 2010:706)

2. Illogical standardised parameters

Correlation estimates between constructs or standardised coefficient exceeding |1.0| is theoretically impossible or expresses an identification problem (Hair, et al., 2010:706). Wu (2009:65&95) also indicated that it is great if the value of the standardised coefficient (factor loading) is between .50 and .95.

3. Appropriateness of standard errors

Standard errors are affected by sets of observed variables and/or latent variables. It is not easy to define when standard errors are large or small. Therefore, Byrne (2010:67) used Jöreskog and

Sörbom's (1989) suggestion that there is no definitive criterion, and she suggested that the significance of parameter estimates can be estimated by standard errors. The statistic needs to be $> \pm 1.96$ (based on a probability level of .05). In other words, when critical ration (C.R.) of regression weights is $> \pm 1.96$, standard errors are appropriate (see Table 81).

The assessment result of offending estimates is based on the following observations: (1) there are at least 3 items in each dimension and the sample size of the current research is over 1200 which means that Heywood case does not occur in the research; (2) there is no negative values of variance estimates, each t-value is larger than 1.96 and reached statistical significance ($p < .001$) and all standard errors are small; (3) although some standardised estimates are out of range between .05 and .95 (see Table 78), all estimates are lower than 1. Thus, offending estimates is unlikely to occur in the current research's SEM analysis.

6.4.8 Assessment of fit of external structure of a model (Overall model fit)

GOF estimates is a set of indicators which measure the validity of the model. Each GOF measure is unique, but those measures can be categorised into three groups: Absolute fit indices, incremental fit indices, and parsimony fit indices (Wu, 2009:63-87; Hair, et al., 2010:664-669). Table 82 shows criteria for GOF model assessment.

1. Absolute fit indices

Absolute indices usually include χ^2 statistic, Normed Chi-square (NC), Goodness-of-index (GFI), Adjusted Goodness-of-index (AGFI), Root mean square residual (RMR), Root mean square of approximation (RMSEA).

A. χ^2 and NC

χ^2 is an index which evaluates the explanation level of the model. It is good if the value of χ^2 is small and the test is not significant ($p > .05$). It means that the data fits with the hypothetical model. However, the value of χ^2 and the level of significance could be easily influenced and distorted by the sample size (Wheaton, 1987; Hayduk, 1988; Hair, et al.,

2010:666). Wu (2009:68-71) suggests that the ideal sample size is between 100 and 200. If it is over 200, the fitness of χ^2 should be reconsidered. Chang and Cheng (2012:100) claimed that when ML estimations technique is conducted with samples over 500, the value of χ^2 is excessively estimated. The ratio between χ^2 and degree of freedom (also called: Normed Chi-square; NC) is a good index that reduces the effect of sample size. Carmines and Mclver (1981), Ullman and Bentler (2003), Schumacker and Lomax (2004), Wu (2009:71) and Chang (2011:101) concluded that the index of NC should be between 1 and 3. If the research takes a loose criteria strategy, the maximum value 5 is acceptable.

B. GFI and AGFI

Hair, et al. (2010:667) claimed that the possible range of GFI is 0 to 1. A higher value indicates better fit. When the value is greater than .90, GFI can be considered to be of good value (Hu & Bentler, 1999). Bollen and Long (1993) suggested that if GFI is higher than .92, it is even better. This is because the value of GFI will be under-estimated when the sample size and the degree of freedom are larger. In this case, Chang and Cheng (2012:101) stated that adjusted GFI (AGFI) can be considered. Although the common judgmental value of AGFI is .90, the value is easily influenced by the large number of estimated variables. Thus, MacCallum and Hong (1997) agreed that .80 can be accepted. On the other hand, AGFI will be under estimated, when the sample is small (Bollen, 1990).

C. RMR and RMSEA

Hair, et al. (2010:668) explained that RMR and RMSEA are known as badness-of –fit measures in which a lower value represents a better fit and higher values mean poorer fit. Wu (2009:73) described that when the value of RMR is under .05, the data fit with the hypothetical model. RMSEA is the most widely used for correcting the big sample size effect on χ^2. Lower RMSEA values indicate better fit (Hair, et al., 2010:667). The confidence interval of RMSEA is not unanimous among researchers. For example, Hu and Bentler (1999) suggested that RMSEA should be less than .06; Schumacker and Lomax (2004) agreed that RMSEA values are debatable

when the value is less than .05 and, .01 can be seen as outstanding fit. Browne and Cudeck (1992) described that fit is poor when the value is greater than .10, mediocre between .08 and .10, reasonable from .05 to .08, and good as long as the value of RMSEA is less than .05. Although RMSEA is the most popular measure of SEM (MacCallum, et al., 1996), Fan, et al. (1999) emphasised that RMSEA cannot be solely considered because the value is exaggerated with small sample size.

2. Incremental fit indices

Incremental fit indices evaluate the level of model fit with some alternative baseline model (Hair, et al., 2010:669). Wu (2009:79), Chang and Cheng (2012:103), and Hair et al. noted that Comparative Fit Index (CFI), Normed-Fit Index (NFI), Non-Normed Fit Index (NNFI), Incremental Fit Index (IFI), and Relative Fit Index (RFI) are common measures.

A. CFI

The value of CFI is between 0 and 1, with higher values indicating better fit. When the value is over .90, the data fit with the model (Hair et. al., 2010:669). The CFI estimate is not affected by sample size. According to Bentler's (2005) research, the estimate will still be accurate when the sample is small (Wu, 2009:81).

B. NFI and NNFI (TLI)

Apart from CFI, NFI is an alternative index for incremental fit indices. The cutoff point of NFI is .90 (Wu, 2009:81; Chang & Cheng, 2012:104). Schumacker and Lomax (2004) claimed that .95 is more suitable. However, the value of NFI will be inaccurate when the sample size is small. In the situation, the minimum acceptable value of NFI should be reset as .80 (Ullman & Bentler, 2003). Chang and Cheng (2012:104) noted that NFI cannot respond the complexity of sample; the value will be higher if the sample is more complex. Therefore, NNFI should be also considered as one important incremental fit index. NNFI is also called Tucker-Lewis Index (TLI) and is conceptually similar to the NFI (Hair, et al. 2010:668; Chang & Cheng, 2012:104). If the

value of NNFI is greater than .90, the data fit with the model.

C. IFI and RFI

IFI and RFI are two additional common incremental fit indices. The judgmental value of IFI is .90 and it could be greater than 1, but the value is not influenced by sample size (Chang & Cheng, 2012:102). Wu (2009:82) noted that Hu and Bentler's (1999) suggestion is to consider an RFI value of .95.

3. Parsimonious fit indices

Parsimonious fit indices are designed to provide information about which is the best among a set of competing models (Hair, et al., 2010:669). Those indices includes Akaike Information Criteria (AIC), Consistent Akaike Information Criterion (CAIC), Expected Cross-Validation Index (ECVI), Parsimony adjusted NFI (PNFI), Parsimony Goodness-of-Fit Index (PGFI), and Hoelter's Critical N (CN).

A. AIC, CAIC and ECVI

The AIC index takes into account the numbers of estimated variables into the measurement process so as to compare the level of simplification among a set of models. CAIC index is an improved estimate of AIC index that also considers sample size effect. If the value is smaller, it means that the model has a better fit. However, AIC and CAIC can only be considered when the model meets two conditions: the sample size is over 200 and the data are suitable for multivariate normal distribution (Diamantopulos & Siguaw, 2000). Wu (2009:82) noted that Bandalos (1993) and Stevens (1996) agreed that AIC and ECVI are reliable indices for evaluating cross validity when comparing models. Generally speaking, ECVI is more accurate than AIC and lower values mean that the model has a better fit.

B. PNFI and PGFI

PNFI and PGFI are two indices which assess the model's degree of parsimony. When the value of PNFI and PGFI is over .50, the model can be seen as a simple model which means that

the hypothetical model has a low degree of parsimony and can be accepted (Wu, 2009:83). On the other hand, PGFI is the main index for evaluating and comparing a set of model. Yu (2006) described that if the differences of PNFI value between several models reach .06 to .09, it reflects that the difference is significant.

C. CN

Hoelter's CN was developed for assessing how big a sample size is needed to achieve the fitness of the hypothetical model (Hoelter, 1983). Wu (2009:85) claimed that when CN $\geq$200, it means that the estimation of the model is valid. Hu and Bentler (1995) suggested that 250 is more appropriate figure.

Table 81: The GOF model assessments criteria

Fitness indices	Recommended value	Model value
Absolute fit measurement		
Chi-square	p> .05	***1837.459 (p=.000 < .05)***
NC	Between 1 and 3	***3.796***
GFI	> .90	.914
AGFI	> .90	.900
RMR	< .05	***.103***
RMSEA	< .05 good fit ; < .08 reasonable fit	.052
Incremental fit measurement		
CFI	> .90	.959
NFI	> .90	.946
NNFI	> .90	.946
IFI	> .90	.960
RFI	> .90	.941
Parsimonious fit measurement		
AIC	Lower value means better fit	1991.459
CAIC	Lower value means better fit	2462.234
ECVI	Lower value means better fit	1.622
PNFI	> .50	.867
PGFI	> .50	.880
CN	> 200	359

6.4.9 Bollen-Stine bootstrap p-value correction

The value of χ^2 is small and the level of significance could be easily influenced and distorted by the sample size. The ideal sample size is between 100 and 200. If it is over 200, the fitness of χ^2 should be reassessed (Wheaton, 1987; Hayduk, 1988; Wu, 2009:68-71; Hair, et al., 2010:666). Bollen and Stine (1992) suggested that the bootstrap method can correct χ^2 so as to recalculate the overall model fit. The Bollen-Stine p-value correction method was conducted and the results are shown in Figure 41 and Table 83. The corrected value of χ^2 is 724.841 and it is reduced by 60.55% (compared with the original value of 1837.459). The data displayed are close to normal distribution. Meanwhile, samples do not have to conduct the bootstrap method and the

p-value is .999 (1-.001). According to the result of p-value correction, the reason why the p-value in ML estimate is significant is due to a big sample size and not a poor model setting. Therefore, the overall model fit is reassessed and shown in Table 92 (χ^2 =724.841, p= .999>.05, GFI: .98, AGFI: .97, RMSEA: .02, CFI: .99). Although the overall model fit was acceptable before the correction (see Table 82), the correction improves the overall model fit so that the fitness of the model's external structure is more satisfactory.

Table 82: GOF assessment after the Bollen-Stine bootstrap p-value correction

Fitness indices	Recommended value	Model value
Absolute fit measurement		
Chi-square	p> .05	724.841 (P=.999 > .05)
NC	Between 1 and 3	1.49
GFI	> .90	.98
AGFI	> .90	.97
RMR	< .05	-
RMSEA	< .05 good fit ; < .08 reasonable fit	.02
Incremental fit measurement		
CFI	> .90	.99
NFI	> .90	-
NNFI	> .90	.99
IFI	> .90	.99
RFI	> .90	-
Parsimonious fit measurement		
AIC	Lower value means better fit	1094.84
CAIC	Lower value means better fit	-
ECVI	Lower value means better fit	.89
PNFI	> .50	-
PGFI	> .50	-
CN	> 200	824.49

6.4.10 Indirect, direct and total effect

The relationships between consumer experience, service quality, consumer satisfaction, and loyalty have been set out in the literature review. Consumer experience is an additional variable which should allow the forecasting of consumer satisfaction and loyalty. Therefore, the research conducted a Path Analysis (PA-LA) in order to test the model and assess the degree of association and directions between each pair of variables. Figure 42 demonstrates the result of the Path Analysis (PA-LA) showing direct effects between all variables. The total effect of one variable is the part of its observed correlation due to presumed causal relations only. Chiu (2006:14-28) explained that direct causal correlations are one direction arrowheads. Non-direct causal correlations (i.e. it is also called spurious correlations) mean that considering two direction arrowheads within single one. For example, the correlation between consumer experience and service quality is significant. Non-direct causal correlation can be found when the influence of service quality is considered in the effect of consumer experience on consumer satisfaction and loyalty (direct causal correlations). Thus, when both direct causal and non-direct causal correlations (i.e. spurious correlations) are considered into the total effect along all distinct paths between the variables, it is the sum of total effects from all valid tracings between two variables in a recursive model which is called model-implied or predicted correlation (Harrell, et al., 1980; Kline, 1998:169).

The direct effect of service quality on consumer loyalty is not statistically significant (Beta=.046, n.s.). However, the direct effect of service quality on consumer satisfaction (Beta=.191, $p<.001$) and the direct effect of consumer satisfaction on consumer loyalty (Beta=.352, $p<.001$) are significant. This means although there is no direct effect of service quality on consumer loyalty, an indirect effect exists and is mediated by consumer satisfaction (indirect effect: $.191 \times .352 = .067$). Hence, the total effect of service quality on consumer loyalty is .067 as there is no direct effect. On the other hand, the direct effect of consumer experience on satisfaction (Beta=.628, $p<.001$) and consumer satisfaction on loyalty (Beta=.352,

p<.001) exist so their indirect effect is .221 (.628 × .352 = .221) and the total effect is .625 (.221 + .404 = .625). Finally, the degree of association between consumer experience and service quality is significant, the correlation coefficient is .659 (p<.001) and the coefficient of determination is .434 (.659 × .659= .434), which means there is a positive correlation between consumer experience and service quality, explaining 43.4%. The details of the direct and indirect effects are shown in Table 84.

According to the result of path analysis (see Figure 42), the spurious correlation (non-direct causal correlation) is established when the correlation between consumer experience and service quality is also considered in the effect of causal correlation relationships (i.e. consumer experience or service quality on consumer satisfaction and loyalty). Therefore, the spurious correlated indirect effect of consumer experience (via service quality) on consumer loyalty is 0 (.659 × 0) and .004 (.659 × .191 × .352). The model-implied correlation of consumer experience on loyalty is .629, which is the sum of the direct effect and indirect effect between consumer experience and loyalty (via consumer satisfaction), and the spurious correlated indirect effects (.404+.221+0+.004). On the contrary, the spurious correlated indirect effect of service quality (via consumer experience) on consumer loyalty is .266 (.659 × .404) and .145 (.659 × .628 × .352). The model-implied correlation of service quality on consumer loyalty is .478 (0+.067+.266+.145). In general, the effect of consumer experience on consumer satisfaction and loyalty (total effect: .659) is higher than service quality (total effect: .067) and the difference is over .50. However, it seems that good experience usually comes with good service quality. If both consumer experience and service quality are considered together on the consumer satisfaction and loyalty, the gap of model-implied correlation is smaller (.624−.478=.164).

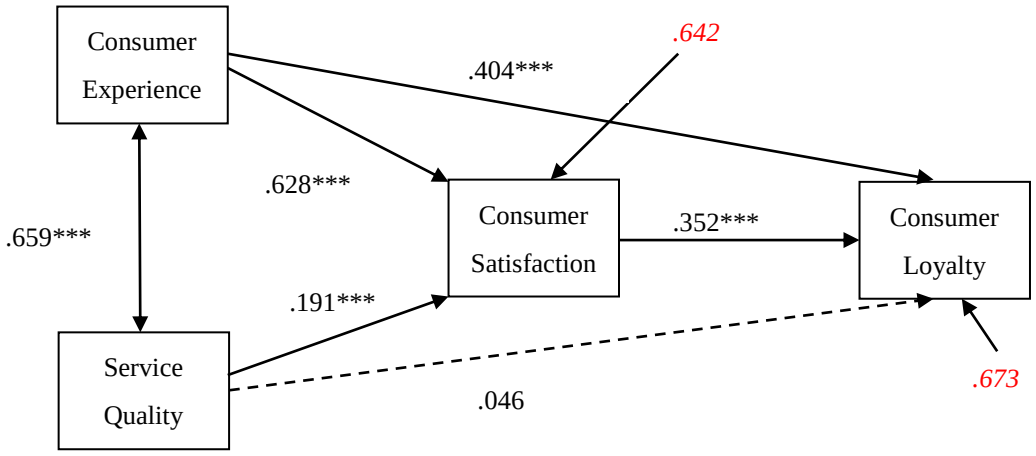

Figure 42: The result of path analysis (PA-LA)

Table 83: Direct, indirect, and total effect between variables

	SQ	EX	CS	CL
Total effect				
CS	.191	.628	0	0
CL	.067	.625	.352	0
Direct effect				
CS	.191	.628	0	0
CL	0	.404	.352	0
Indirect				
CS	0	0	0	0
CL	.067	.221	0	0

6.4.11 Cross-validity

Cross-validity is used to demonstrate that the model can fit with any set of data. The data should be divided into different groups and compared so as to comprehend the levels of difference in terms of model assumptions. If two sets of data meet statistical significance ($p < .05$), there is a difference between the two groups. This means the invariance between groups is not significant. However, the assessment of invariance is not only strongly influenced by the structure model, but could also be made inconsistent by using different replication

strategies. For instance, loose, moderate, and tight replications are three common strategies. However, the tight replication strategy is not considered by the current research, because Marsh and Hocevar (1985), Byne, et al. (1989) and Chang (2011) explained that this is too strict. The statistical significance is easily reached. On the other hand, Little (1997) and Cheung and Rensvold (2002) suggested that *practical significance* and *nested model significance* should also be considered (ΔCFI >.01, ΔTLI>.05). Thus, when the p value is smaller than .05, and ΔCFI >.01 or ΔTLI>.05, there is a significant difference between groups and cross-validity does not exist. In order to test cross-validity properly, the data of the current research is randomly divided into two groups. Measurement weights (p= .265), structural covariance (.215), and measurement residuals (.211) do not reach significance. It means that no matter which replication strategy is considered, the differences between models are not significant (see Table 85). Therefore, the model has satisfactory cross-validity.

Table 84: Cross-validity of the model

Model	χ^2	df	Δdf	$\Delta\chi^2$	P	CFI	ΔTLI	RMSEA
Unconstrained	1021.55	152	-	-	.000	.923	-	.068
Measurement weights	1030.38	159	7	8.83	.265	.923	-.004	.067
Structural covariance	1041.15	167	8	10.77	.215	.923	-.004	.065
Measurement residuals	1059.06	181	14	17.92	.211	.922	-.006	.063

6.4.12 Statistical power test

The power of the statistical test assesses the possibility for the SEM model's hypothesis to fall into a type II error. Kline (2011) and Chang (2011) explained that SEM is one kind of "accept-support" contest of the power test which means if the p value is higher or equal to .05, H_0 is accepted. MacCallum, et al. (1996) explained that when the value of power is low, H_0 is not easily rejected. This could cause the hypotheses of the SEM model to fall into type II error.

Thus, the statistical test's power is important to assess the correctness of the outcome.

Chang (2011:225) supported the method advocated by MacCallum et al. (1996). This framework provides the estimation of model testing in terms of RMSEA by setting three types of null hypothesis: close-fit (H_0: $\varepsilon_0 \leq .05$), exact-fit (H_0: $\varepsilon_0 = .05$), and not close-fit (H_0: $\varepsilon_0 \geq .05$). The power of the statistical test establishes whether the model is close to close-fit or far from close-fit. There are no specific rules about how much for the power value is enough. However, Murphy, et al. (2009:20) suggested that the value can be accepted when it is greater than .50. If the value of power is greater than .80, it is adequate for the testing. McCallum, et al. (1996) indicated that the value of power and the minimum sample size are calculated in terms of significance level (α=.05), null value of RMSEA (ε_0=.05), alternative values of RMSEA (ε_a=.01 for not close-fit & .08 for close-fit), degrees of freedom, and sample size. Schoemann, et al. (2010) used open-source "R" to establish a website[5] for calculating the power and the minimum sample size. The degree of freedom of the current research is 484 and the sample size is 1229. Both value of close-fit and not close-fit hypotheses are 1. The minimum sample size is 74 (for not close-fit) and 50 (for close-fit). According to the result of statistical power test, the value of power is adequate (either using close-fit or not close-fit, the value of power is 1>.80) and the sample size for the current research is more than enough (1229>74 and 50). Therefore, the current research can conclude that hypothesises of SEM are unlikely to fall into a type II error.

6.4.13 Multi-group comparison

According to the findings of focus groups, spectators' experiences in CPBL vary according to days (weekday or weekend), stadiums (some clubs have two stadiums), and clubs, as some tend to provide more extraordinary experiences. Consequently, the data were divided into groups to assess the model differences based on these contextual factors. The first set of models compares what we called ordinary and extraordinary clubs for appellative and practical reasons. However,

[5] Plotting power curves for RMSEA (http://www.quantpsy.org/rmsea/rmseaplot.htm)

we should keep in mind that reality is more subtle and that certain clubs mainly proved ordinary experiences although others mainly provide extraordinary experiences. The second comparison is between weekday and weekend games. Finally, stadia for the same clubs are compared.

1. Clubs providing ordinary versus extraordinary experiences

According to the results of focus groups, Brother Elephants and Sinon Bulls are the two clubs which tend to mainly provide ordinary experiences to spectators while Lamigo Monkeys and 7-Eleven Lions are the clubs which mainly deliver extraordinary experiences. The current research compared ordinary and extraordinary clubs and found that models reached statistical significance in each replication strategy. This means that the model for the clubs providing more ordinary experiences are different from the one of the clubs providing extraordinary experiences (see Table 86 in appendix 5). In the model of ordinary clubs, the direct effect of consumer experience on consumer loyalty is .33 and the indirect effect (via consumer satisfaction) on consumer loyalty is .52. There is no direct and indirect effect between service quality and consumer loyalty. The total effect is .85. In contrast, the model of extraordinary clubs presents different patterns. The direct effect of consumer experience on consumer loyalty is .49 and the indirect effect (via consumer satisfaction) on consumer loyalty is .18. There is no direct effect between service quality and consumer loyalty. The indirect effect of service quality on consumer loyalty is .06. The total effect is .73 (see Figure 43).

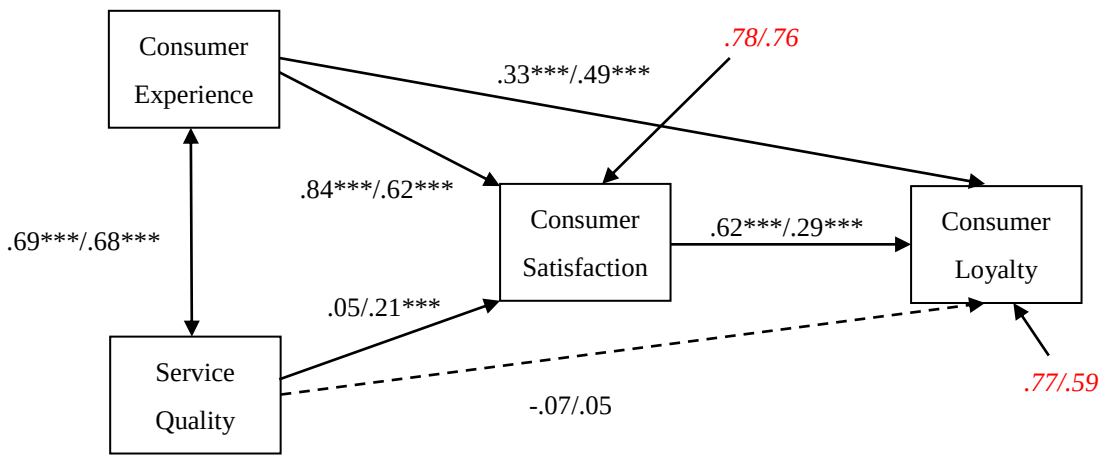

Figure 43: Model comparisons of Ordinary/Extraordinary experiences clubs

2. Weekday versus weekend experiences

The findings of the focus groups suggest that consumer experiences differ significantly between weekday and weekend games. Consequently, the current research compared two corresponding model. The results (see Table 87 in appendix 5) using the loose (p= .90) and the moderate (p=.50) replication strategies show that models do not reach statistical significance for each replication strategy. It means that the models do not significantly differ when comparing weekday games and weekend games.

3. Clubs in their own home stadium

The focus groups' participants emphasised that consumer experiences are distinct from different stadia. Each type of replication strategy reached statistical significance when comparing models for different stadia (See Table 88 in appendix 5). In the model of the Elephants, Bulls and Lions' stadia, the direct effect of consumer experience on consumer loyalty is .45 and the indirect effect (via consumer satisfaction) on consumer loyalty is .38. There is no direct and indirect effect between service quality and consumer loyalty. The total effect is .83. In contrast, the model of the Monkeys has a different structure and different factor loadings. The direct effect of consumer experience on consumer loyalty is .40 and the indirect effect (via consumer satisfaction) on consumer loyalty is .16. There is no direct effect between service quality and consumer loyalty. The indirect effect of service quality on consumer loyalty is .14. The total effect is .70 (see Figure 44).

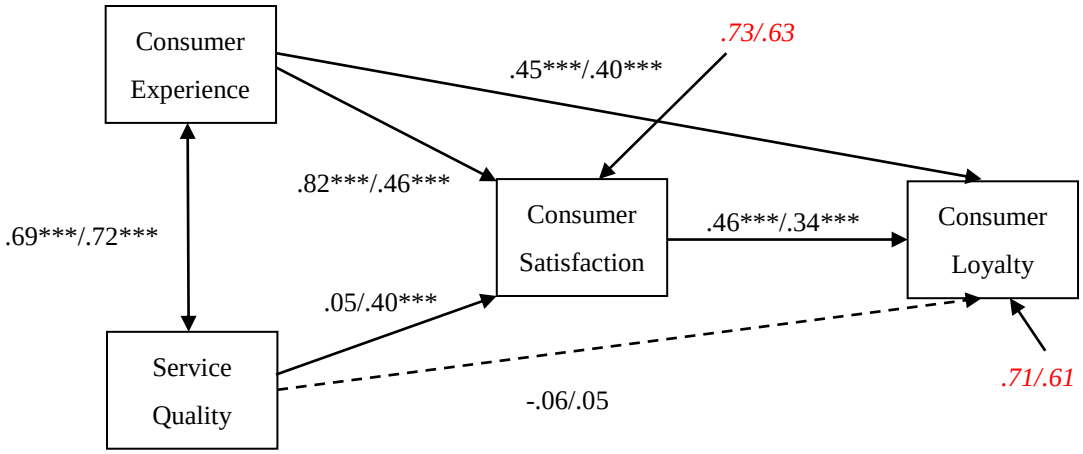

Figure 44: Model comparisons of the Elephants/Bulls and Lions/Monkey (stadium)

4. One club in different stadia

The Elephants and Bulls are the two clubs which use two stadia in the home city as their home game stadium. It is interesting to consider the differences for the same club in two stadia. The current research compared the two stadia of the Bulls and found that although measurement weights (loose replication strategy) were statistically significant, the differences with the other replication strategies were also significant. Although those two stadia are in Bulls' home town, the atmosphere could be seen as different between two stadia. In stadium 1, the direct effect of consumer experience on consumer loyalty is .50 and the indirect effect (via consumer satisfaction) on consumer loyalty is .45. The total effect is .95. There is no direct effect between service quality and consumer loyalty, and the indirect effect is .01. The total effect is .01. In contrast, the model of stadium 2 has different structure and factor loadings. The direct effect of consumer experience on consumer loyalty is .07 and the indirect effect (via consumer satisfaction) on consumer loyalty is .60. The total effect is .67. There is no direct effect between service quality and consumer loyalty. The indirect effect of service quality on consumer loyalty is .01. The total effect is .01 (see Table 89 in appendix 5, Figure 45). On the other hand, the comparison of the Elephants stadia did not reach statistical significance (see Table 90 in

appendix 5). In conclusion, it is clear that for the Bulls each stadium has its own distinguishing attributes influencing the model of the relationships between consumer experience, service quality, consumer satisfaction and loyalty. For the clubs which use two stadia as their home bases, only the Bulls reached statistical significance. The difference between the two stadia which are used by the Elephants then is not significant.

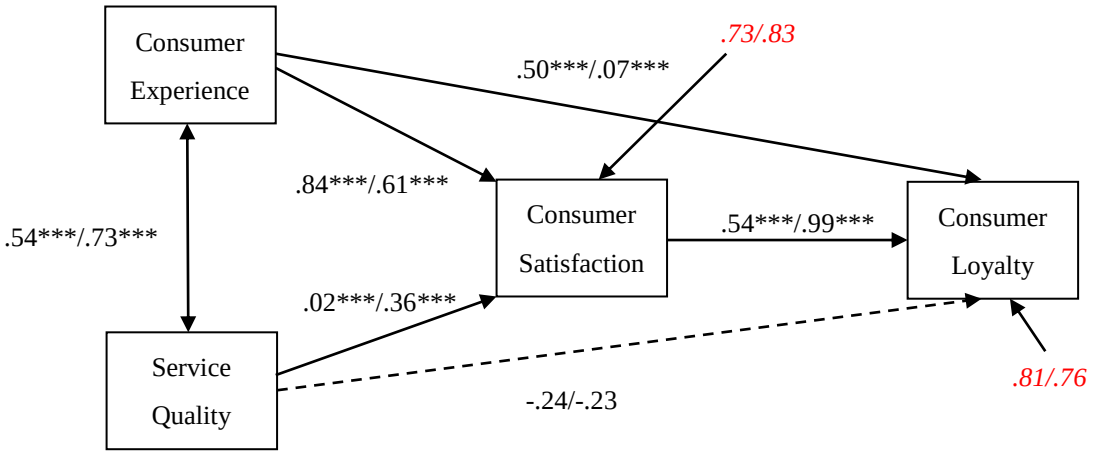

Figure 45: Model comparisons of stadium 1/stadium 2

CHAPTER 7: Discussion and implications

7.1 Introduction

This chapter discusses the research findings and provides conclusions based on the original research questions. The first section is the discussion of the research variables which includes demographic and behavioural variables, the model relationships, and the comparisons. The test results of hypothesises and model comparisons were previously presented in the chapter 6, and then are discussed in this chapter. The second part of this chapter is about the theoretical and managerial contributions which are established by the current research. The last section of this chapter deals with the limitations of the current research and future research directions.

7.2 Discussion

The discussion section comprises three parts: first, it deals with the findings regarding the demographic and behavioural characteristics of spectators. These findings help club marketers to get more information about the characteristics of CPBL spectators. The next section is the discussion of the relationships between consumer experience, service quality, consumer satisfaction, and loyalty. The findings are able to address the role of consumer experience in the relationships between service quality, consumer satisfaction and loyalty. Finally, the last part of the discussion deals with the model comparisons in terms of specific contexts in the CPBL. All research hypothesises and comparisons were based on the literature review and the findings from the qualitative stage (i.e. the focus groups).

7.2.1 Demographic and behavioural variables

Here, the descriptive results of the demographic and behavioural variables are discussed and compared with other relevant publications. The nine variables discussed are namely: gender, age, marital status, education, occupation, team supported, length of support, and attendance and expenditure.

1. Gender

The percentage of male spectators is higher than that of female ones (Male: 64.6%; Female: 35.4%). The gender distribution is close to a 60%-40% split, in line with the proportion found by Wang (2007), Liu (2010) and Wang, et al.'s (2011) in their studies. Liu (2010) summarised a variety of other studies about the CPBL, for instance Chen, et al. (2003), Lu (2007), Hung (2003), Hsu (2000), Huang (2004) and Yu (2006), and indicated that the percentage of female spectators has increased by about 20% since 2000. According to this analysis, this increase was from 20% to 30% between 2000 and 2003. The percentage of female spectators rose by 40% to 50% from 2005 to 2008. Although some recent studies such as Wang (2010) and Liao (2004) have reported different gender distributions (70%-80% of male and only 30%-20% of female), it is clear that male spectators represents a clear majority Referring to Cai's (2008) suggestion that female spectators' attending experiences at sporting events are strongly influenced by friends, if clubs' marketing managers can consider this aspect in the experiences they offer, the number of female spectators would potentially represent a growing segment for the CPBL (Chen, 2005). Moreover, there is a significant statistical difference in terms of consumer experience between male and female CPBL spectators. The female spectators perceive experience positively higher than male. The outcome indicates a phenomenon where female spectators may perceive emotional dimensions more strongly than male spectators during live games. Their attention could be easily attracted by many events beyond the core product the game. Therefore, if the clubs realise the importance of the growing female spectators market and want to expand the proportion of these

spectators, the question of how to add more extraordinary experiences is important.

2. Age

Although spectators who are under 18 were not included in the research due to ethical considerations, the average age of spectators is still under 30 years (ranging from 18 to 65 with 71% under 30). This is consistent with the findings of Yang (2006), Wu (2007), Fan (2008), and Liao (2008). Liu (2010) conjectured that this is because more and more people keep attending school for higher education and do not marry until mid-thirties, especially in Taiwan. Liao (2008) suggested that the reason people over 30 do not go to live games so often is because they are probably more aware or concerned about game fixing and the controversial side of the CPBL than those who are under 30. However, the research partly contradicts these perspectives. Comparing studies from 1995 to 2010, the main age group of the CPBL spectators has always been those between 20 and 30 (Lin, 1995; Liu, 1998; Lee, 2004; Yang, 2006; Wu, 2007 & Fan, 2008). This has not changed significantly during the last 15 years. However, the percentages for the over 30 year-old age group were different before 1999. Spectators who are aged over 35 years old represent the second largest group in early CPBL studies (Lin, 1995 & Liu, 1998), but this changed after 2005 (Liu, 2010; Liao, 2009). It shows that being in higher education can be one of the reasons why the main age group is under 30 years old. Most people who finish their Master's degree in Taiwan are unlikely to be younger than 24 years old, which means people aged between 20 and 25 are likely to be students. Students usually have more free time and the CPBL offers a limited amount of free tickets, to students for each regular season game. On the other hand, marriage cannot solely explain the decrease of the over 30 age group. The research supports the suggestion which was made by Liao (2009) about how those spectators who are over 30 may not attend live games because of their higher awareness of game fixing scandals than younger age groups.

Consumer experience, service quality, consumer satisfaction, and loyalty are significantly

different between age groups. These results are consistent with many studies about the CPBL and other sport organisations in Taiwan. However, the tendencies are diverse. The research found that the less than 20 years old and over 28 years old age groups have significantly higher scores. Liao (2004) surveyed the CPBL spectators and concluded that the young age group also displayed higher scores on experience and satisfaction, but that the middle age group was significantly higher than other age groups regarding consumer loyalty. In 2009, Liao studied the same context and found that the young age group showed better ratings for all variables. There is a similar outcome regarding the highest scores for consumer experience, satisfaction and loyalty with the youngest age groups in SBL (Lin, 2007, Hsiao et. al., 2011). In conclusion, age is an important demographic variable for consumer experience, service quality, consumer satisfaction, and loyalty. Young spectators are more active, enthusiastic and energetic, and so are more likely to respond to sporting experiences and experiential marketing positively, be satisfied and become loyal than other age groups (Lin, 2007).

3. Marriage

Over 70% of spectators are not married. This is consistent with the conclusions of Chen (2005), Wu (2007) and Wang, et al. (2011). According to the statistical yearbook of interior (The official government documents; Ministry of the Interior of Taiwan, 2012), only 24% of 20-30 year old Taiwanese people were married in 2011. This is in line with the distribution of the data where only 20%-30% of spectators were married and over 30 years old. Thus, the marriage status is correlated with age and occupation in this context. Most of them are younger than 30 years old and are students so marriage is not considered due to economic reasons.

Wu (2007) concluded that there are no differences between CPBL spectators when comparing consumer experience, satisfaction, and loyalty in terms of marriage status. According to the current research, spectators who are married displayed significantly higher ratings on service quality and consumer satisfaction. There is a contrary result with consumer experience and

consumer loyalty, and both of them do not reached statistical significance in terms of marriage status comparison. However, it does not mean that spectators who are married agree and are satisfied with the services which are provided by the CPBL clubs. This could be the reason why consumer loyalty is not significant between marriage statuses. Spectators who are married are usually older and could be more rational and demanding regarding their consumption. They could know the CPBL very well and/or be more experienced so their expectations would be higher than spectators who are single, younger, more emotional, and more passionate. In this case, the differences in service quality and consumer satisfaction would be more likely due to age differences than to marriage status.

4. Education

The percentages of spectators who hold an undergraduate and postgraduate degree are 61.9%, and 15.5% respectively. Only .8% of the spectators do not have a secondary school degree. The result is similar to the conclusion made by Wang, et al. (2011), Fan (2008), Liao (2009), Wang (2010), Wu (2007), Yang (2006), and Chen (2005) about undergraduate degree holders representing more than 60% of the spectators. However, the percentage of postgraduate holders has increased during the last 12 years (Liao, 2009 & Liu, 2010). Liu (1998) studied CPBL consumer behaviours and demonstrated that the majority of spectators were only high school degree holders. This is consistent with Chao's (2000) research, which found that only 2.3% of CPBL spectators had a postgraduate degree. The percentage of postgraduate degree holders has varied in recent studies. According to their results, the minimum proportions were just over 10% (Fan, 2008 & Cai, 2008) or over 20% (Yang, 2006; Wu, 2007 & Wang, 2010). Liao (2009) and Liu (2010) explained that it is not only because having a higher education degree is seen as vital in Taiwanese society, but also because job opportunities are reduced because of the economic recession. More and more students decide to continue their study as long as they are able to find a sponsor to support them.

In comparison with the conclusions made by Liao (2004) and Wu (2007), the outcome of the current research is different. Liao (2004) found that the score for consumer experience was higher when the CPBL spectators hold lowest or highest education degrees. The distribution seems to be like a reversed bell shape. In contrast, the trend for service quality is in opposition regarding spectators' level of education. In other words, the spectators who hold a higher education degree have higher expectations of service quality. There is also a positive relationship between consumer loyalty and education which means that higher educated spectators are more loyal. They are more willing to attend other live games, when they assess their consumer experience positively. Wu (2007) claimed that this remarkable tendency only appeared for consumer loyalty, but not for satisfaction. However, the current research found that the opposite relationship does not only exist between education and service quality, but also between consumer experience, satisfaction, and loyalty. It is clear that spectators have different levels of expectation and perceived experiences depending on their educational background.

5. Occupation

Consistent with the age, marriage, and education distributions, the majority of CPBL spectators list their occupational status as student (37.8%). After this, the second largest group is made of spectators who work in the service industry (16.6%). This is similar to the findings of Yang (2006), Fan (2008), and Liu (2010). CPBL games usually start at 18:30 on weekdays and 17:00 on weekends. According to the Labor Standards Act (Council of Labor Affairs, 2012), the maximum working hours per week is 42. In other words, ordinary workers, which include blue-collar and white-collar workers, usually work 8.4 hours a day and 5 days a week. Unless their full time job comprises a shift system or workers are self-employed, other workers' leisure opportunities are restricted by working hours during weekdays. This explains why students and people who work in the service industry represent the majority of the CPBL spectators. The amount of working hours is one factor which influences the chances for spectators to attend live games. Only spectators with fixed working hours are likely to attend live games often.

Both Liao (2004) and Wu (2007) indicated that student spectators had higher ratings regarding consumer experience than non-student spectators. This means consumer satisfaction and loyalty are not strongly influenced by the occupation variable. Student spectators are younger, more active, more enthusiastic, more energetic, and more passionate (Lin, 2007). The consumer experiences of young students are also more easily influenced. However, the current research found that although students gave higher scores on consumer experience than non-student spectators, this does not reach statistical significance. This result reduces further the role of occupation on perceived experiences and satisfaction.

6. Supported Team

Regarding consumer experience, Lamigo Monkeys obtained significantly higher ratings than the other clubs. Both Brother Elephants and Uni-President 7-Eleven Lions are second. For service quality, the scores of Lamigo Monkeys and Uni-President 7-Eleven Lions are significantly higher than the others. For consumer satisfaction, the spectators of Lamigo Monkeys and Uni-President 7-Eleven Lions gave positive feedback and reached statistical significance when compared with Brother Elephants, Sinon Bulls and the group of spectators who do not support a specific club. For consumer loyalty, spectators who support any club have similar levels, but spectators who do not support any club gave significantly lower scores which are logical.

Based on the current research's findings, the most popular and supported club in the CPBL is Brother Elephants. This outcome appears to be consistent with other research, for example Chen (2005), Liao (2009), and Liu (2010). There is another interesting phenomenon that the second most popular club is usually the championship title holder. For example, Sinon Bulls had many spectators in 2005 because the club won the championship that year (Chen, 2005). There were similar findings for Liao (2009), Liu (2010) and the current research for the 2011 season. There was an exception in 2009 as two clubs were dismissed in 2008 and Sinon Bulls recruited many

famous players from those two clubs. Consequently, Sinon Bulls became the second most popular club but did not win the championship in 2009. It is clear that if a club's performance is better, more spectators will attend live games. Meanwhile, famous players and/or any extraordinary events could also attract more spectators to attend live games. Therefore, if clubs do not have outstanding performances in the league, the marketing activities should be strengthened in order to raise the possibility of attracting more spectators to attend live games.

The current research's findings also show that spectators who watched the Monkeys and the Lions rated their service quality higher than those who watched the Elephants and Bulls. As for the consumer experience score, the Lions' score is higher than the other two clubs' scores, but this difference did not reach statistical significance. This is not fully in line with the focus group findings that both the Monkeys and the Lions try to provide more events around games to deliver more extraordinary experiences to spectators. This difference in terms of results could possibly be explained by the profiles of the focus groups' participants who were mainly die-hard fans, indicating their perception is not shared by all spectators. Although Liao (2009) also claimed that the Lions and the Monkeys' spectators had a higher involvement on extra-events offered by the clubs, it does not mean that extra-events lead spectators to get more involved in the games and improve their consumer experiences. Moreover, Yang (2006) suggested that spectators who support different clubs give dissimilar feedback on consumer satisfaction and loyalty, even if dissimilar feedback was not always found significant. There are so many factors which could possibly influence spectators to support a club and their feedback on consumer experience, service quality, consumer satisfaction, and loyalty. For instance, one reason could be that the Monkeys moved their home base to a new city and started to recruit new supporters. Extraordinary experiences could be more easily provided in comparison with other clubs. The Lions lost games during the data collection which could also have influenced spectators' ratings. On the other hand, many factors could influence spectators to support a club. For example, Wang, et al. (2011) claimed that the CPBL has a unique feature which is the absence of a local fan base.

The clubs in the league do not really represent any particular city or regions. Although the clubs try to find a city as their home base, the concepts of home and guest team are spurious. All clubs arrange games everywhere in Taiwan. Thus, the concept of regional identification does not strongly exist in the league, unlike other professional baseball leagues in the world. Also, game fixing and gambling scandals appeared during those years and it might have changed spectators' supporting attitude and influenced their consumer behaviour especially regarding the consumer experience, service quality, consumer satisfaction and loyalty variables. In summary, consumer experiences in the CPBL can be improved by adding more extra-events as the comparison between clubs seems to suggest. However, the effect of consumer experience on service quality, satisfaction, and loyalty should be further investigated to distinguish the specific impact of the experiential marketing approach in Taiwanese professional baseball games.

7. Length of support

The average time of club support is 7.8 years. 49.8% of spectators have been supporting their club for 10 years or more. Another major group is formed by spectators who have been supporting their club for less than 3 years. The distribution of length of support is in line with Liao (2009) and Yang's (2006) findings which described that there are two main groups of the CPBL spectators: either fans that can be seen as die-hard and support clubs longer than 10 years, or new spectators who have supported them for less than 3 years. Length of support has been affected by several factors. Yang (2006) estimated that new spectators were attracted because of the merging of two leagues in 2003. Liao (2009) explained that because the national baseball team of Taiwan won many international games and tournaments such as the Asian games organised by Olympic Council of Asia and qualified for the Athens Olympic Games in 2004, the CPBL was able to attract new spectators. However, two points should be emphasised. First, spectators who have been supporting a club for between 4 and 9 years represent a minority. Second, it is well known that when the league and clubs have a long history and benefit from a

good reputation, they usually have more support from spectators who are likely to stay loyal. Unfortunately, many studies (e.g. Yang, 2006; Chen, 2008; Liao, 2009) have shown different results. According to the conclusion made by Yang (2006) and Liao (2009), the current research found that the percentage of spectators who have been supporting for more than 10 years has dropped dramatically. This confirms that the main reason why spectators do not stay loyal to their club was the game fixing and gambling scandal (Liao, 2009). However, a poor level of satisfaction must also be taken into account.

There are two more interesting findings. First, there is no difference regarding consumer experience, service quality, and consumer satisfaction in terms of length of support. Although there is no statistical significance, it is however noticeable that all scores are lower than average and lower scores are given by spectators who have been supporting their club for a longer period. Obviously the league and clubs are unable to maintain a good level of spectators' consumer experience and service quality over a long period of time. This is because they cannot invest resources on facilities or create themed events for the club in the stadia. For example, food stands are temporary, which means the quality of food cannot be guaranteed, or it takes a long time for a lot of paperwork if there is any facility that has to be repaired. Moreover, themed events for home clubs are not easily arranged, so that it is difficult for spectators to differentiate between home and away games. Therefore, spectators' satisfaction is low. The reason why spectators still support their club could be because of their enthusiasm for baseball or for certain players and/or clubs; but not for the products or services provided by the league and the clubs. Secondly, the difference regarding consumer loyalty is only apparent for certain groups of spectators in terms of length of support. The spectators who have been supporting a club between 9 and 14 years gave higher scores for consumer loyalty than spectators who have been supporting a club less than 9 years or over 15 years. In the current research, the concept of consumer loyalty is assessed in relation to the single game which they attended and the overall assessment of the 2011 season. This could be the reason why the evaluation of consumer loyalty

is not consistent with the length of support. In other words, the assessment of concept of consumer loyalty could influence the relationship between consumer loyalty and length of support.

The results indicate that spectators who have been supporting for between 9 and 14 years are likely to be die-hard fans. Although they are not fully satisfied with their consumer experiences and the services provided by the CPBL and clubs, and/or disillusioned by the game fixing and gambling scandals of the past, they still remain loyal to their clubs. This phenomenon demonstrates that spectators may stay loyal due to other reasons (e. g. supporting specific players, the club being based in their home town) rather than being satisfied by the league and clubs. In addition, the reason for spectators who have been supporting their club for more than 15 years giving lower scores than the spectators who have supported for between 9 and 14 years is possibly because they have grown up with the CPBL. They have been through a lot with the league. Therefore, they may have felt angry because of the game fixing and gambling scandals. They could have also felt disappointed due to the lack of service improvement from the league and clubs. This result is in line with the findings of Yang (2006) which suggested that CPBL spectators were not satisfied but still stayed loyal because of their enthusiasm for baseball and the lack of alternatives. Spectators could feel dissatisfied when they are high-frequency users and the original standard of service quality seems no longer sufficient. Therefore, improving service quality could be a priority for them.

8. Attendance

Although the final figures of attendance are not fully accurate for the 2011 season due to the survey being conducted during the middle of the season; the results from the 2011 season show a tendency which is similar to the 2010 season where most spectators attended less than 10 live games, but watched more than 20 games in one season. Spectators are concerned with their club, but watch more on TV than they go to live games. The outcome bolsters the conclusion coming

from Yang (2006), Wu (2007), Wang (2010), and Liu (2010). According to the findings of Wang, et al. (2011), there are many factors which affect spectators' decisions to attend a live game. However, there is a unique feature in the CPBL which is that the concept of home or guest team is not very clear in the league. Clubs' home games do not necessarily take place in the same city as the city of the club's headquarters. For example, Lamigo Monkeys are based in Taoyuan city which is in the northern area of Taiwan. The club may have some home games in Taipei or New Taipei city which are the home bases of Brother Elephants. This strategy explains why clubs usually arrange between 40 and 50 games (i.e. there are usually 80 home games for each club) in their home base city every season so that the possibility for spectators to attend a live game is restricted. However, clubs believe that a good strategy for attracting spectators is to arrange games everywhere in Taiwan. Thus, this feature may force spectators to watch games on television instead of attending live home games. When spectators watched games on TV they usually gave better scores about consumer experience, satisfaction, and loyalty than those who went to live games. This is because those live games in the CPBL do not always provide a good level of consumer experience and service quality. Supporters would therefore prefer to just watch it via TV for free and so their expectation of the game and the service (i.e. it is usually provided by TV channels) would be lower in terms of consumer experience and service quality. Clubs have to be aware of it and try to improve consumer experience and service quality of live game to increase the possibility of transforming TV viewers into live game spectators.

Yang (2006) investigated CPBL attendance on different days. Apart from Mondays, which are official days off work, there is a remarkable discrepancy between weekdays and weekends. This result is consistent with the CPBL figures[6] showing that the average number of weekend spectators is higher than the average number of weekday spectators. A possible explanation for this difference was previously discussed in relation to the occupation variable. Another

[6] http://zxc22.idv.tw/

difference regarding the CPBL attendance is the gap between regular season and postseason. The average attendance for regular season games for the last 10 years (from 2003 to 2012) was 2,820, whereas 11,904 was the average attendance figure for postseason games. This is because the postseason is a series of short and intense games. The championship is strongly affected by each game, which motivates spectators to attend these live games. This analysis corroborates one focus groups' conclusion which was that games directly related to the overall ranking position could be considered as extraordinary experiences. Meanwhile, interviewees claimed that they receive different levels of experience because of the variations between the numbers of spectators between weekday and weekend games highlighting the importance of other consumers and spectators on individual's satisfaction supported by Bodet and Bemache-Assollant (2009). The experiential marketing strategy could be a potential solution for adjusting this disequilibrium of attendance by providing extraordinary experiences during regular season games.

9. Expenditure

Generally speaking, the CPBL spectators are mainly unmarried males who are less than 30 years old. Most spectators are well-educated (i.e. usually holding a first degree or above) and one-third of them are still students. Brother Elephants is the most supported club from the sample. It is the only club for which sporting performances do not really seem to influence spectators' decision to attend live games. Spectators who support other clubs may change their attendance behaviour based on performance. Most spectators watch more games via TV than they attend live games. Therefore, their expenditure on CPBL tickets and commodities is less than £20 per month. All variables in the model have showed statistical differences based on age, education, team supported and expenditure. Consumer experience and loyalty were found to be statistically different for both types of attendance (live and TV). Differences were also found between gender in relation to consumer experience, attendance patterns in relation to consumer satisfaction, and length of support in relation to consumer loyalty. Moreover, the current research

found some special characteristics of CPBL spectators in terms of demographic and behavioural variables. First, the percentage of female spectators is growing. The percentage of female spectators that would like to attend CPBL live games and perceive consumer experience importantly is higher than that of male spectators. Second, comparing with older age groups of spectators who are usually over 30 years old and married; younger age groups of spectators are likely to positively respond to engineered experiences, be satisfied and become loyal because they could be more active, enthusiastic and full of energy. Considering behavioural variables of length of team support, attendance and expenditure, the current research concluded that although spectators may not be satisfied with the products or services which are provided by the league and clubs, they could still support a club and attend live games because of their enthusiasm for baseball, a club, or a player. However, the tendency of expenditure shows that spectators who are satisfied are likely to spend more money on CPBL tickets and commodities. Finally, except for Brothers Elephants, which is the most popular and supported club, how a club is supported by spectators is related to its sport performance. Thus, a proper marketing strategy is needed for other clubs to attract spectators to attend live games when they do not produce good performances.

7.2.2 The Relationships of the model

The result of the model testing is shown in Figure 46. The relationships between the four variables were constructed and tested: the link between consumer experience and service quality, the effects of consumer experience on consumer satisfaction and loyalty, and the effects of service quality on consumer satisfaction and loyalty. The last one is the relationship between consumer satisfaction and loyalty.

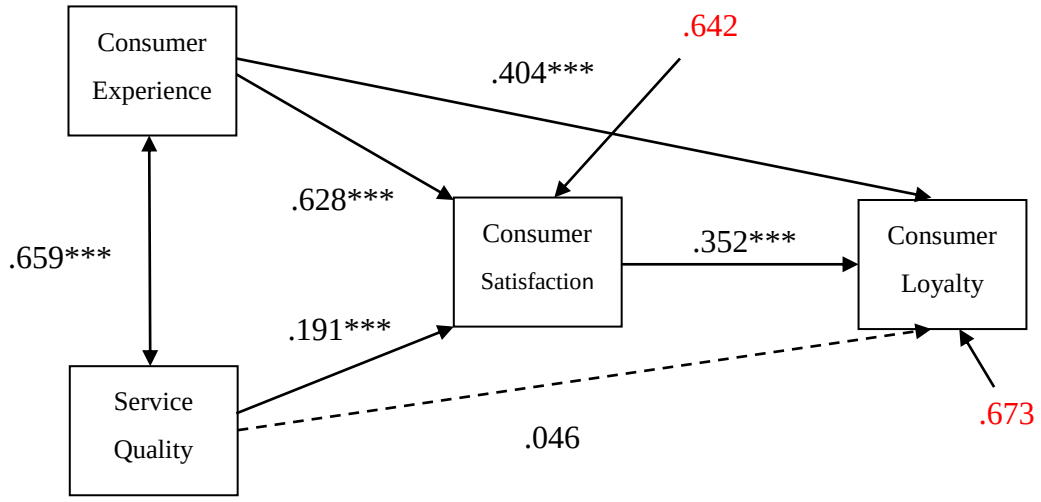

Figure 46: Assessment of model testing

1. The link between consumer experience and service quality

The degree of correlation between consumer experience and service quality is significant. The correlation coefficient is .659 ($p<.001$) and the coefficient of determination is .434 (.659 × .659= .434) which means that the correlation between consumer experience and service quality is confirmed and that the explanation power of the two variables is 43.4 % of variance. In other words, the correlation between consumer experience and service quality is moderately high. Wu and Tu (2008) claimed that the correlation can be seen as moderately high, when the correlation coefficient is between ±.60 and ±.80. The current research hypothesised that service quality and consumer experience are two separate constructs which are positively and significantly linked, therefore ($\boldsymbol{H_6}$) is validated.

Generally speaking, the positive and significant relationship between consumer experience and service quality found in the current research corroborates the arguments and findings of Langeard et al. (1981), Fornell et al. (1996), Greenwell et al. (2002), and Clemes, et al. (2011) that service quality is not the only one central concept of consumption, but also shared some common elements with consumer experience. The link between consumer experience and service

quality is normally high or strong because there is often some overlapping between those two variables. For instance, a complete measurement of service quality could also include some emotional (subjective) factors. Although the current research tried to keep emotional dimensions in the consumer experience variable and featured functional dimensions in the service quality variable, the link between consumer experience and service quality is still moderately high, meaning that it is difficult, from a managerial point of view, to separate the experiential elements from the functional elements as acknowledged by Schembri and Sandberg (2011).

Schmitt (2003) also advocated that consumer satisfaction and loyalty could be only fully created when both consumer experience and service quality were considered as two crucial indicators. Liao (2004) conducted an empirical study of the CPBL and produced a similar conclusion - that the relationship between consumer satisfaction and loyalty should consider both consumer experience and service quality. However, this author conceptualised service quality as one component of the concept of consumer experience which is not consistent with the literature review. On the other hand, Cheng and Yu (2009) assessed the effect of experiential marketing on indoor swimming pool consumers in Taiwan. Their results suggested that providing good experiences is one of the most important factors for success in a competitive market - especially in service industries. In conclusion, although consumer experience and service quality shares some common elements, these concepts should be treated as two different variables. Managers who want to either focus on consumer experience or service quality should understand their interdependence and that focusing on both should allow them to maximise the organisational benefits.

2. The effects of service quality on consumer satisfaction and loyalty

The direct effect of service quality on consumer satisfaction is significant (Beta=.191, $p<.001$), however the direct effect of service quality on consumer loyalty was not found to be statistically significant (Beta=.046, n.s.). The indirect effect of service quality, which is mediated

by consumer satisfaction, is also significant (indirect effect: $.191 \times .352 = .067$). If non-causal correlation is also considered, the model-implied correlation of service quality on loyalty is .478. Therefore, hypothesis $\boldsymbol{H_1}$ is accepted **(Service quality** has a positive effect on **consumer satisfaction)**, but hypothesis $\boldsymbol{H_2}$ is rejected (**Service quality** has a positive effect on **consumer loyalty**).

This finding regarding the weak direct influence of service quality on consumer loyalty is in line with several studies. For instance, Liao (2004) focused on the CPBL and Ko, et al. (2011) looked at the MLB, with both studies of professional baseball concluding that service quality is one important antecedent of consumer satisfaction and loyalty in sport spectating events. Theodorakis and Alexandris (2008) described that the direct relationship between service quality and consumer loyalty was weak. Moreover, Theodorakis, et al. (2013) focused on football fans and agreed with Cronin Jr., et al. (2000) finding that the influence of service quality on consumer loyalty was mainly indirect via consumer satisfaction, which means there is only a partial mediation effect of consumer satisfaction in the relationship between service quality and consumer loyalty. In order words, the functional aspects of service quality cannot directly and effectively influence consumer loyalty in sport spectating events. Clemes, et al. (2011) studied rugby union in New Zealand and Koo, et al. (2009) investigated Minor League Baseball (MiLB) in the USA. Both studies supported the statement made by Lazarus (1991) and Bolton and Drew (1991) that service quality is related to spectator satisfaction and significantly influences it. Clemes, et al. (2011) also indicated that service quality strongly influences consumer satisfaction. When consumer satisfaction is increased, the intentions of attending future games and recommendations are increased too. Consumer loyalty is enhanced when service quality and consumer satisfaction are high. A similar conclusion was made by Madrigal (1995) for whom consumer satisfaction is an important predictor of future attendance. The ability to provid good service quality to spectators is consequently an essential condition for professional sports organisations. It leads spectators to enhance the level of satisfaction and loyalty, and then

rewards profit for organisations in return (Anderson, et al. 1994; Anderson & Sullivan, 1993; Dagger & Sweeney, 2007). In non-sport industries, especially in Taiwanese restaurants, Kuo, et al. (2011) supported the conclusion that good service quality does not ensure that consumers will come back again. Thus, consumer satisfaction is a key contribution factor for increasing consumer loyalty via service quality improvement (Liu & Jang, 2009; Sivadas & Baker-Prewitt, 2000). In tourism, relevant studies, such as those of Chi and Qu (2008), Lee, et al. (2004, 2007) and Lee (2009) also concluded that consumer satisfaction plays a mediating role between service quality and consumer loyalty.

However, the effect of service quality on consumer loyalty was again not demonstrated. Various conclusions have been made by different researchers. For instance, Lee, et al. (2010) concluded that service quality has a partial effect on consumer satisfaction and a full effect on consumer loyalty. Theodorakis, et al. (2013) supported the assumption made by Brady, et al. (2005), Brady, et al. (2001) and Tapp and Clowes (2002) that cultural differences could be the main reason why the effect between service quality and consumer loyalty is not universally clear. Also, Parasuraman, et al. (1985) suggested that service quality may be influenced by three factors: world of mouth, personal needs, and past relevant experiences. Those factors do not only depend on individual characteristics, but are also highly affected by cultural properties. Another possible explanation is that the result shows how consumer satisfaction is a broader concept, which goes beyond a simple evaluation of service quality and is influenced by other factors (i.e., personal and situational factors as identified by Alexandris et al. in 2004). Finally, although significant, the strength of the relationship cast some doubt on the linearity of the relationship between service quality and consumer satisfaction as analysed by Bartikowiski and Llosa (2004) and demonstrated by Bodet (2006) and Bodet and Bernache-Assollant (2011) for sport participation and sport spectacle respectively.

3. The effects of consumer experience on consumer satisfaction and loyalty

The direct effects of consumer experience on satisfaction (Beta=.628, p<.001) and consumer loyalty (Beta=.404, p<.001) are positive and significant. The direct effect of consumer satisfaction on loyalty is also significant (Beta=.352, p<.001). The indirect effect of consumer experience on loyalty via satisfaction is .221 (.628 × .352 = .221). Therefore, the total effect of consumer experience on loyalty is .625 (.221 + .404 = .625). If the non-causal correlation is also considered, the model-implied correlation of consumer experience on loyalty is .629. These results in a sport service context are in line with Lee and Chang's (2012) conclusion. First, consumer experience is an antecedent variable of consumer satisfaction and loyalty. It also has a direct and indirect effect on consumer loyalty. Second, consumer satisfaction plays a mediating role between consumer experience and consumer loyalty. Last, consumer satisfaction is an important antecedent of consumer loyalty. Hypotheses $\boldsymbol{H_4}$ **(Consumer experience** has a positive effect on **consumer satisfaction)** and $\boldsymbol{H_5}$ (**Consumer experience** has a positive effect on **consumer loyalty**) are therefore accepted.

Liao (2004) and Chung (2008) found causal relationships between consumer experience, consumer satisfaction, and loyalty by investigating CPBL spectators. When CPBL spectators perceive higher levels of consumer experience, consumer satisfaction can be increased which in turn increases the possibility of spectators to remain loyal. The same tendency was also demonstrated in other sport industries: Clemes, et al. (2011) focused on New Zealand rugby union and Yeh (2006) studied a sport centre. On the other hand, Hsiao, et al. (2011) and Lin (2007) investigated a semi-professional basketball league in Taiwan, the Super Basketball League (SBL), and made a similar conclusion as Mano and Oliver (1993) - that both positive and negative consumer experiences have effects on consumer satisfaction and loyalty. In short, consumer experience does not only have a positive effect on consumer behaviour. However, if more positive consumer experiences are provided, it will increase the possibility of achieving

consumer satisfaction and loyalty (Burton, et al., 2003). Biscaia, et al. (2012) specifically suggested that creating good stadium atmosphere and social facilitation could be a useful strategy in order to increase positive experiences for spectators and then to contributes spectators' satisfaction and positive behavioural intentions.

Other findings from non-sporting contexts are consistent with this result. Liao (2011) studied these relationships in the context of the franchise furniture store IKEA and claimed that when consumer experience creates consumer satisfaction, there is a higher probability of achieving consumer loyalty. Mascarenhas, Kesavan, and Bernacchi (2006) explained that creating a total consumer experience is an effective way of enhancing consumer loyalty. Rahardja and Anandya (2010) suggested that consumer experience affects consumer satisfaction and behavioural intentions Moreover, the studies also found the direct and indirect effects of consumer experience on loyalty in different consumption areas. For instance, Lee, et al. (2010) and Shao and Liang (2010) investigated shopping malls and supermarkets while Lee and Chang (2012) explored wine tour contexts in Taiwan. The current research was able to draw the same conclusions and support the causal relationships between consumer experience, consumer satisfaction, and loyalty.

4. The effect of consumer satisfaction on consumer loyalty

The direct effect of consumer satisfaction on consumer loyalty (Beta=.352, $p<.001$) is positive and significant. The total effect of consumer experience on consumer loyalty is .625. The total effect of service quality on consumer loyalty is .067; because it only exists when consumer satisfaction plays a mediating role. If model-implied correlation is considered instead of total effect, the model-implied correlation of consumer experience on loyalty is .629 and service quality on loyalty is .478. The level of influence on consumer loyalty is increased notably, when both service quality and consumer experience are considered. Hypothesis $\boldsymbol{H_3}$ is accepted (**Consumer satisfaction** has a positive effect on **consumer loyalty**).

The relationship was demonstrated as significant which is in line with many studies. For example, Liao (2004), Wu (2007), and Yang (2006) studied the CPBL consumer behaviours and concluded that consumer satisfaction is one important antecedent of consumer loyalty. Laverie and Arnett (2000) and Madrigal (1995) explained that spectator satisfaction is related to intention to attend a future match and that it can be predicted by satisfactory experiences. The findings of Lin's (2007) research on SBL support the same conclusion. A similar finding was also found in other non-sport research contexts. Lee, et al. (2010) focused on consumers in shopping malls and Lee and Chang (2012) surveyed tourists during a wine visit. Both studies claimed that consumer satisfaction is an important antecedent of consumer loyalty. However, the effect of consumer satisfaction is not always significant on consumer loyalty. For instance, Rahardja and Anandya (2010) found that consumer satisfaction did not have a significant effect on behavioural intentions in game centre context.

The importance of the experiential dimension in the service industries was discussed by Holbrook and Hirschman (1982) and Filser (2002). The latter established a continuum, from low to high, of products or services' experiential contents and they would be consistently considered as high in the sport spectating industry. The current research confirms the effect of consumer satisfaction on loyalty but tends to reduce the importance of service quality on consumer satisfaction and in turn on consumer loyalty. The current research also claimed that although both the effect of consumer experience and service quality on consumer satisfaction and loyalty are important, the power of influence between two variables is not equivalent - which is in line with Schmitt's (2003) standpoint. Consumer experience is more influential than service quality upon consumer satisfaction and loyalty. According to Liao (2004), when CPBL spectators perceive a higher level of consumer experience, their satisfaction is increased, enhancing the possibility of spectators staying loyal. However, he indicated that the main source of creating consumer loyalty is consumer satisfaction instead of consumer experience. Consumer experience has a sub-effect on consumer loyalty which means that it is not like service quality in having a

strong main effect on consumer loyalty. The characteristics of consumer experience could be the reason why the findings of the current research differ from Laio's conclusion. As Schmitt (1999; 2003) and Palmer (2010) explained, consumer experiences are unique, dynamic, and multi-dimensional and the evaluation of their outcomes could be very different because those factors could be influential during the experience perception process. Although the difference may be caused by the characteristics of the consumer experience, the differences highlighted the value of considering consumer experience as one of the key factors for improving the link with consumer satisfaction and loyalty. Consumer loyalty is expected to be increased when consumer satisfaction is achieved by improving service quality. However, consumer experiences are able to directly and indirectly influence consumer loyalty and are different from service quality which needs consumer satisfaction to play a mediating role between service quality and consumer loyalty. In other words, spectators' loyalty could effectively emerge with consumer experiences.

7.2.3 Model comparisons

After having analysed the relationships between service quality, consumer experience, satisfaction, and loyalty for the whole sample, the next step for the current research was to compare the models which are applied to different specific contexts producing different types of experiences, following the outcomes of the focus groups. The first specific context concerns the comparison between two groups of clubs: those which attempt to provide extraordinary experiences against those which mainly deliver ordinary experiences. The second specific experience context is focused on the comparison between weekday and weekend games. The last specific experience context focuses on the stadia between clubs but also for the same club when it is the case.

1. Clubs providing ordinary versus extraordinary experiences

According to the focus groups' findings, Brother Elephants and Sinon Bulls were identified to be the two clubs which mainly provide ordinary experiences in comparison with Uni-President

7-Eleven Lions and Lamigo Monkeys which are more likely to provide extraordinary experiences. The statistical results (See Figure 47) show the model comparison sets were found to be statistically distinct, confirming that ordinary and extraordinary experiences do impact consumers' perceptions. However, if the current research considers the practical significance (ΔCFI> .01, ΔTLI>.05) which is put forward by Little (1997) and Cheung and Rensvold (2002), there is notable distinction between the two models. This means that differences do exist but not to a significant extent. It is not surprising that the effect of consumer experience on loyalty in clubs that provide extraordinary experiences is higher than for clubs that provide ordinary ones. The tendency is consistent with the effect of service quality on consumer satisfaction. The effect of consumer satisfaction on loyalty is significant for both groups but the link appears stronger for ordinary experience clubs than for extraordinary ones. However, there is an opposite result regarding the indirect effect of consumer experience on loyalty (via consumer satisfaction). The effect of consumer satisfaction on loyalty is the same for both types of clubs. The current research found that a context-specific research condition could explain why the relationships between variables are not consistent. One potential explanation for this is that Lamigo Monkeys changed the club name and moved their home base to another city in Taiwan at the end of the previous season (i.e. 2010 season). The club received significant criticism from fans and spectators who have been supporting the club for a long time and the club has faced the challenge of attracting new consumers in a new marketplace (new city and new supporters). This change could have possibly affected the assessments of consumer experience, satisfaction, and loyalty.

According to one conclusion from the focus groups, most spectators claimed that the main ordinary experiences came from the game itself. Although other events are able to create more extraordinary experiences, this research analyzed each dimension of consumer experience and the findings show that the affective dimensions for both groups of clubs are similar (i.e., Emotion and Think are two most influential dimensions). More specifically, the findings of the current

research indicate that although the spectators of Elephants and Bulls claimed that their club provided more ordinary experiences, they actually have stronger emotional feedbacks which made them rate their consumer experience higher. On the other hand, spectators of Monkeys and Lions reached statistical significance regarding the indirect effect of service quality on consumer loyalty (via consumer satisfaction), meaning that they perceived service quality (rational dimensions) significantly higher than the spectators of other groups. The results show that the satisfaction and loyalty of Elephants and Bulls spectators are strongly driven by emotional factors, but not service quality. In contrast, although the levels of consumer experience, satisfaction, and loyalty of Monkeys and Lions spectators may be influenced by other factors, service quality still plays as a significant role in influencing consumer satisfaction and loyalty.

This result offers two important insights. First, providing extraordinary events to spectators not only strengthens the level of consumer experience, but also improves the direct effect of service quality on consumer satisfaction and indirect effect on consumer loyalty. This is in line with Schmitt's (1999) suggestion that ExPros is a communication tool for delivering consumer experience, and SEMs can be delivered by creating an appropriate environment. Therefore, if clubs would like to provider more extraordinary experiences, ExPros is not the only tool, and another good starting point is to improve service quality for delivering holistic and hedonic consumer experiences. Thus, the current research claimed that consumer experience and service quality act together as triggers for increasing consumer satisfaction and loyalty in sport spectating events. Second, even if clubs tend to only provide ordinary experiences, strong emotional reactions could be delivered in sport spectating events due to the passion for the club or a player. The cause could be the different nature of spectators' expectations. Some of them could be more oriented towards the core product/service experience (i.e. the games itself) and others might be more oriented towards the peripheral services (i.e. the events which are organised by the league or club). A further segmentation of the spectators would be needed to support this conclusion. From an opposite point of view, the clubs which try to deliver

extraordinary experiences could not always deliver high levels of extraordinary contents to consumers - due to the influence of external conditions, for example, individual characteristics, situational factors, physical experience elements, human interaction elements, or any incidents. In conclusion, providing more extraordinary experiences cannot guarantee that consumers will perceive higher levels of consumer experience in sport spectating events. Consumer experience could be simply driven by passion for the sport, club, or player. However, if clubs conduct experiential marketing as a strategic marketing approach based on service quality and set up a tactical level approach to control and manage consumer experience appropriately, consumer satisfaction and loyalty can potentially be enhanced.

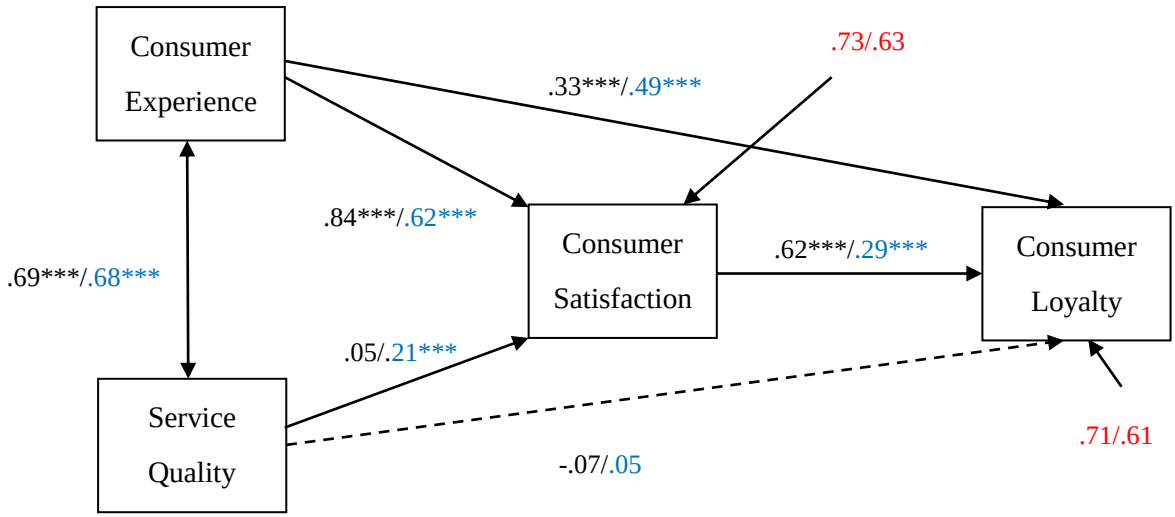

Figure 47: The model comparison (ordinary and extraordinary clubs)

2. Weekday versus weekend experiences

According to the conclusions of the focus groups, extraordinary experiences were mainly identified as being provided during weekend games. For example, there are more spectators and more events that are held by the clubs during these games. These experiences can be perceived as special when compared with weekday games. However, two sets of model did not reach statistical significance, which means that the difference between weekday and weekend models

is small and that they can be considered as similar. Therefore, the current research claims that there is no significant difference in terms of relationships between concepts between weekday and weekend games. The online CPBL statistical database[7] shows that the average number of spectators during weekends (Saturday and Sunday) was higher than weekdays (Monday to Friday) for each CPBL season. For example, the average number of spectators for weekday games between the 2009 and 2012 seasons (i.e. only 4 clubs during this period) was 2,272 whereas it was 3,916 for weekend games. However, the difference of impact regarding ordinary and extraordinary experiences is not fully identified. The research conjectures that Fridays could explain this absence of difference. Apart from Saturdays and Sundays, Fridays are popular days to attend CPBL live games. Friday nights are a common time for social or leisure activities. Consequently, they could possibly be categorised as weekend games where social or leisure activities are concerned. The clubs also understand this phenomenon and try to arrange home games on Fridays and Saturdays. Away games are usually arranged during other weekdays. For instance, clubs tend to arrange games all around the Taiwan Island and they organise games in cities which are not their home base cities during weekdays. The particular status of Friday games could have created a bias in the model comparison of weekday and weekend games.

3. Clubs in the home base stadium

According to the statistical results, there are distinctive differences between each club's home stadia. The models for the Elephants, Bulls, and Lions are similar, meaning that all direct and indirect effects of service quality on consumer loyalty are similar. However, the Monkeys' model is distinct from the others. The link between consumer experience and service quality is higher. The effect of service quality on consumer loyalty is significant. Both direct and indirect effects of consumer experience on loyalty are lower than for other clubs. The effect of consumer satisfaction on loyalty is also lower than others (See Figure 48).

[7] http://zxc22.idv.tw

The findings suggest that the confusion between ordinary and extraordinary clubs is influenced by the fact that the Monkeys changed their club name and home base. The Monkeys use a brand-new stadium as their new home base in northern Taiwan. Lin (2012) explained that the reason why Lamigo Monkeys moved their headquarter from Kaohsiung to Taoyuan is because the Monkeys is the only club which still has the right of management and administration of their home stadium (i.e. all other stadia in Taiwan are owned by the local government and clubs have to apply for management and administration rights) and decorates it with the club's corporate identity. The cost of acquiring the rights for this in Kaohsiung is too expensive. Therefore, the club moved to Taoyuan where the cost of the rights is lower and where it is able to devote more expenditure to improving facilities and decorations. The Lions used to hold management and administrative rights for their home base stadium but gave it up few years ago. As the findings show that the Monkeys showed significantly different results, it seems to indicate that stadium ownership improves service quality so as to ensure consumer experience is kept to a certain level. The rating of service quality for the Monkeys is better than that for other clubs, but the change of home base could bring some negative effects on the relationships between consumer experience, satisfaction, and loyalty. For instance, the original club's supporters could have some criticisms and develop some negative emotional feedbacks (i.e. feel sadness or disappointment), or the club could even lose their support. Overall, the difference between the Monkeys and other clubs regarding the model comparison is validated. This result demonstrates the importance of stadium management and administrative rights. As long as the clubs try to support localism and acquire the right for localization, consumer experience and service quality will be promoted and then lead the improvement of consumer satisfaction and loyalty. Moreover, the Elephants and Bulls use two stadiums in their home base city. This could be another important specific context for the model comparison.

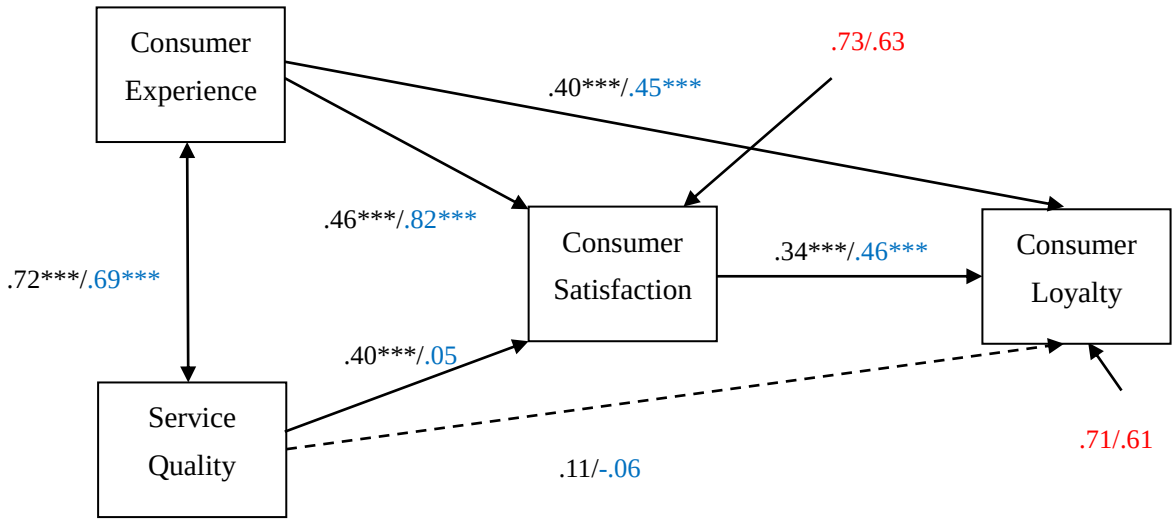

Figure 48: The model comparison (Different clubs within different stadia)
Note. The Monkeys/ Elephants, Bulls & Lions

4. One club in different stadiums

The Elephants and Bulls are the clubs which use two stadia for their games in their home base city. This research compared the relationships between the two stadia for each club. According to the results for the Elephants, all relationships achieved statistical significance. In other words, a model difference is not noticeable between the two home base stadia (Figure 49). The research believes that both Xinzhuang and Tianum stadium are old and located in the megalopolis of Great Taipei. Spectators are able to commute by the Taipei MRT (mass rapid transit) system between the two stadia in 30-40 minutes. Moreover, the Elephants do not have management and administrative rights to decorate these two stadia, although the club attempts to arrange their home games in those two stadia as much as they can. Consequently it is likely that, for most spectators attending live games in those two stadia, there are no noticeable differences. On the other hand, only one set of relationships for the Bulls' models reached statistical significance, which means that a difference between the Bulls home stadia is identified. According to the

website of the Taichung Intercontinental Stadium[8], it started to be used for CPBL regular season games in 2010. However, the Bulls club, which is located in the same city, did not arrange any games at the stadium during this year. In other words, the 2011 season was the first season that the Bulls started to use this stadium. Therefore, it is not surprising that spectators' evaluations within Stadium 1 (Taichung Intercontinental) regarding consumer experience, satisfaction, and loyalty were higher than at the Taichung Stadium (Stadium 2) which is old but used by the club more often. For most spectators, they perceived a better experience which created better level of satisfaction and intentions to be loyal. On the other hand, the link between consumer experience and service quality is high for Stadium 1. The reason for Stadium 1 rating to be lower than Stadium 2 could be related to the fact that the old stadium is in the centre of the city and spectators are familiar with its environment. This shows that the services which are provided by the club are arguably limited and inconvenient. However, spectators may not be familiar with the new stadium's environment yet. The needs for club's support in the new stadium are more important than in the old one. For example, the new stadium is in a rural area where some spectators are unable to attend a game without transportation difficulties. Meanwhile, spectators may also struggle with food and beverages in the new stadium because all stands are temporary and the services provided by the club are limited. In conclusion, the Bulls failed to maintain service quality in both stadia, but could possibly deliver a brand-new experience to spectators because of the use of the new stadium. The result demonstrates that one club using two different home stadia could create very different consumer experiences and deliver different levels of service quality and consumer experience to influence consumer satisfaction and loyalty. Following the example of the Bulls' two stadia in Taichung, the stadium appears to be a crucial factor when conducting experiential marketing strategies.

[8] http://veestadium.markwell.com.tw/?cat=25&lang=enl

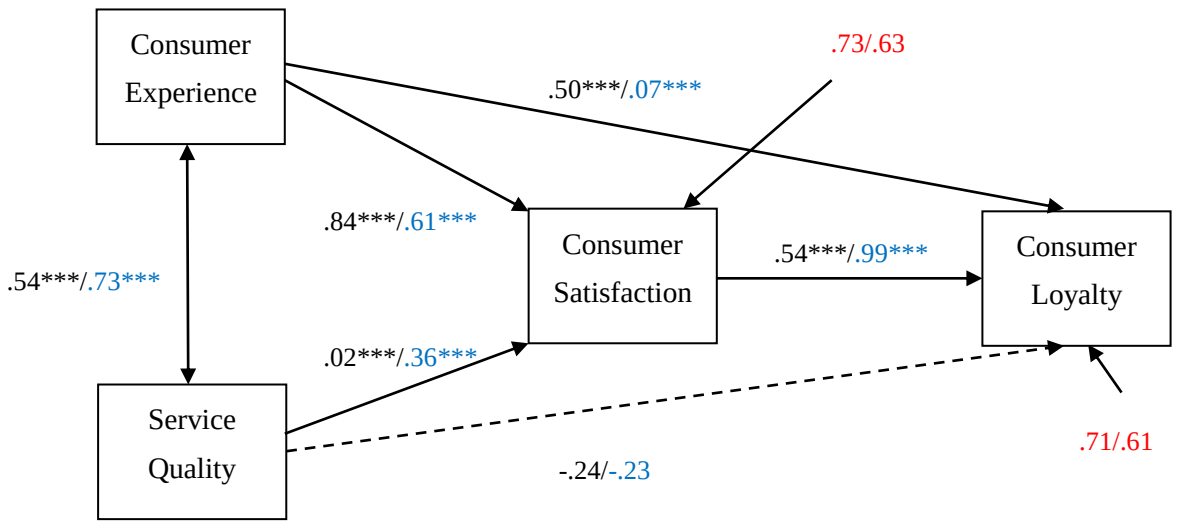

Figure 49: The model comparison (The same clubs within different stadium)
Note. Stadium 1/ Stadium 2

7.2.4 Summary of discussion

Summarising the discussion of demographic and behavioural variables, the CPBL spectators are mainly unmarried males who are less than 30 years old. Most spectators are well educated and one-third of them are still students. Brother Elephants is the most supported club from the sample. It is the only club for which sporting performances do not really seem to influence spectators' decision to attend live games. Spectators who support other clubs may change their attendance behaviour based on performance. Most spectators watch more games via TV than they attend live. Therefore, their expenditure on CPBL tickets and commodities is less than £20 per month. All variables in the model have showed statistical differences based on age, education, team supported and expenditure. Consumer experience and loyalty were found to be statistically different for both types of attendance (live and TV). Differences were also found between gender in relation to consumer experience, attendance patterns in relation with consumer satisfaction and length of support in relation with consumer loyalty. Moreover, the current research found some special characteristics of CPBL spectators in terms of demographic and behavioural

variables. First, the percentage of female spectators is growing. Second, comparing with older age groups of spectators who are usually over 30 years old and married; younger age groups of spectators are likely to respond positively to engineered experiences, be satisfied, and become loyal. Considering behavioural variables of length of team support, attendance and expenditure, the current research concluded that although spectators may not be satisfied with the products or services which are provided by the league and clubs, they could still support a club and attend live games because of their enthusiasm for baseball, a club, or a player. However, the tendency of expenditure shows that spectators who are satisfied are likely to spend more money on CPBL tickets and commodities. Finally, except for Brothers Elephants, which is the most popular and supported club, how a club is supported by spectators is related to its sport performance. Thus, a proper marketing strategy is needed for other clubs to attract spectators to attend live games when they do not produce good performances.

As for the model testing, the relationships between service quality, consumer experience, satisfaction, and loyalty were found to be significant which supports the findings of many sport-related studies. However, if there is only a good perceived service quality level, this does not ensure that consumers will be satisfied and will come back in the future - and consumer experience and service quality should be considered together to create consumer satisfaction and loyalty. Consumer experience is an important factor for developing consumer satisfaction and loyalty and the effect of service quality is not as strong as consumer experience, especially in sport spectating events. Consequently, the current research claimed that consumer experience and service quality act together as triggers for increasing consumer satisfaction and loyalty in spectating sport events.

As for the model comparison, providing more extraordinary experience cannot guarantee that consumers will perceive a higher level of consumer experience in sport spectating events because of external conditions and the importance of the core product (i.e., the game itself). However, if clubs conduct experiential marketing as a strategic marketing approach based on

service quality and set up a tactical level approach to control and manage consumer experience appropriately, consumer satisfaction and loyalty can be improved. The result of stadia comparison addresses the importance of stadium management and administrative rights. If the clubs try to support localism and acquire the rights of their home stadium, it seems that consumer experience and service quality will be enhanced, which will in turn lead to increased consumer satisfaction and loyalty. It also indicates that a stadium should be considered as a key factor when conducting experiential marketing. Table 91 presents the outcome of the testing of the research hypotheses.

Table 90: The results of hypothesis tests

	Hypothesizes	
H_1	**Service quality** has a positive effect on **consumer satisfaction**	A
H_2	**Service quality** has a positive effect on **consumer loyalty**	R
H_3	**Consumer satisfaction** has a positive effect on **consumer loyalty**	A
H_4	**Consumer experience** has a positive effect on **consumer satisfaction**	A
H_5	**Consumer experience** has a positive effect on **consumer loyalty**	A
H_6	There is significant link between **consumer experience** and **service quality**	A
H_7	There is a significant difference between **ordinary** and **extra- experience** in terms of providers' models	A
H_8	There is a significant difference between **weekdays** and **weekends** in terms of providers' models	R
H_9	There is a significant difference between **home stadia** in terms of providers' models	A
H_{10}	There is a significant difference between **different stadia** in terms of providers' models	R

Note. A means accept, R means reject

7.3 Theoretical and managerial implications

The current research followed a mixed methods approach in order to achieve the research aims and objectives and answer all of the research questions. The qualitative and quantitative data were analysed and discussed in the earlier sections. A better understanding of consumer experience, service quality, consumer satisfaction, and loyalty is gained, providing theoretical and managerial implications. Regarding the theoretical contributions, new knowledge is provided regarding consumer behaviours in sport spectacle contexts. As for the managerial implications, the findings and discussions of the current research are summarised and used to provide some practical suggestions for the CPBL league and clubs.

7.3.1 Theoretical implications

Kruger and Saayman (2012) supported the conclusion of Yoshida and James (2010), which holds that although the outcome of the game cannot be controlled or confirmed before the game is finished, the league and/or clubs are able to create memorable spectator experiences by managing the environment. Meanwhile, they also claimed that attending a sport event may be motivated by desires such as looking for entertainment and spectacle, emotional stimulations, curiosities or social outings. These points demonstrate the importance of consumer experience and the current research demonstrated the effect of consumer experience on service quality, consumer satisfaction, and loyalty.

1. Consumer experience is an importance dimension to enhance consumer loyalty.

Service quality can be used to enhance consumer satisfaction and loyalty. However, the relationship between these concepts was not always found to be significant, depending on the contexts investigated. Schmitt (2003) claimed that it is because traditional marketing approaches have focused on the functional elements of services. Therefore, consumer experience was ignored in academic research and practice. Schmitt (2003) claimed that consumer experience

represents a factor which should be considered in the relationships between service quality, consumer satisfaction, and loyalty. Consumer experience was found to significantly influence satisfaction and loyalty.

According to the current research's findings, consumer experience plays a stronger role than service quality but both can be seen as antecedents of consumer satisfaction and loyalty. The findings of this research are not surprising as many studies (e.g., Lee, et al., 2004; Chi & Qu, 2008; Lee, 2009; Lee & Chang, 2012) suggested that service quality only had an indirect effect on loyalty. On the other hand, consumer loyalty is not only directly influenced by consumer experience, but also indirectly via consumer satisfaction. The existence of these two routes tends to indicate that particularly memorable and positive experiences may create an immediate intention to be loyal but that a more cognitive route via the comparison with previous expectations which is the traditional definition of consumer satisfaction can also be considered. However, in the long-term, it can be estimated that the mediating route will have a stronger influence on consumer behaviour, especially when the next fixture is distant.

2. The two-way relationship between service quality and consumer experience

Walls, et al. (2011) supported the argument made by Carbone and Haeckel (1994) that products and services usually come with experiences. It provides the foundation for developing consumer satisfaction and loyalty via the evaluation of service quality and the nature and intensity of the consumer experiences. However, the relationships between the concepts are not clear-cut. For instance, Liao (2004) included service quality as part of consumer experience. Lee, et al. (2010) investigated both effects of consumer experience and service quality on consumer satisfaction and loyalty, but did not consider the two-way link between consumer experience and service quality. Araghchi (2008) drew a causal relationship between two variables considering that only consumer experience was affected by service quality. However, Caruana, et al, (2000) claimed that service quality is a core concept which is related to consumer experience. Langeard,

et al. (1981), Greenwell, et al. (2002), Clemes, et al. (2011), and Schembri and Sandberg (2011) also explained that consumer experience and service quality share some interrelated components. In other words, service quality is a basis for consumer experience, and consumer experience can also help in improving service quality. The difference is that service quality is possibly more controllable than consumer experience - which may be more subjective, multi-dimensional, and personal. The current research proposed that a two-way relationship should be considered between consumer experience and service quality.

3. Intangible elements in consumer experience and tangible elements in service quality

The understanding of the formation of consumer satisfaction and loyalty has remained limited in some research contexts because this mainly relied on the evaluation of service quality. Although some intangible elements are also considered, tangible elements are mainly part of the concept of service quality. Therefore, some scholars (e.g. Holbrook & Hirschman, 1982; Schmitt, 1999, 2011; Palmer, 2010) claimed that consumer experience, which focuses on the intangible component of the service, can be seen as a piece of a jigsaw puzzle to complete the understanding of consumer satisfaction and loyalty. According to the current research's findings, consumer experience and service quality are highly correlated and the interaction between the two variables is confirmed. In the quantitative research stage of the current research, items measuring affective experience (intangible elements) corresponded to consumer experience and cognitive experience (tangible elements) corresponded to the concept of service quality. The significant correlation between those two variables indicates that both of them are relevant in enhancing consumer satisfaction and loyalty as previously indicated. Therefore, the current research claims that intangible elements should be considered in the concept of consumer experience and tangible elements should be considered in the concept of service quality. Evaluating both concepts in this way could provide a complete assessment of consumer satisfaction and loyalty.

4. Specific research contexts are important in consumer experience research.

Palmer (2010), Walls and Wang (2011), Walls et al. (2011) emphasised that the specific contexts are important external factors to address consumer experience. The current research used a mixed-method approach in order to find the specific contexts of ordinary and extraordinary experiences in the CPBL. These contexts were obtained by conducting a qualitative research stage (focus groups). After that, the research design (i.e. sampling strategy) in the quantitative research stage (questionnaire) was conducted based on the findings of focus groups in order to assess how extraordinary experiences influence the relationships between consumer experience, service quality, consumer satisfaction, and loyalty. Although the comparisons did not fully support the findings from the focus groups, the specific contexts offered multiple perspectives to help in assessing the relationships between consumer experience and other consumer behaviour variables. Thus, the current research suggests that consumer experience should further investigate the specificity contexts to assess the influence of consumer experience properly.

7.3.2 Managerial implications

According to the discussion and conclusion of the current research, consumer experience and service quality should be simultaneously considered for improving consumer satisfaction and optimising consumer loyalty. Clubs and leagues should help each other to attract spectators and make them remain loyal. Thus, the research offers some suggestions to the league and clubs.

1. The league

The role of the league is unique in the professional sport industry. The relationship between the league and the clubs is similar to a franchise system in other industries. The league and clubs interact with each other only in terms of managerial and administrative perspectives. Therefore, the current research suggests that the league should become a coordinator between the clubs and various stakeholders. For example, sport stadia in Taiwan belong to the local government

facilities. Clubs are usually struggling with coordinating the management and administrative rights of the stadia with the local authorities. The league could assist clubs in negotiating with the local governments to acquire the unconditional management rights of the baseball stadia, which could help the clubs to improve consumer experience and service quality more efficiently. Moreover, the league cannot decide for the clubs how to create and deliver experiences to consumers, but the league could offer more opportunities for clubs to arrange them. For instance, the CPBL regulations state that every event has to be terminated, and that everyone should leave the stadium within 30 minutes after the game is finished. This is because games start at 6:30 pm and may end very late on weekdays. However, the CPBL schedule during weekends can be flexible. This provides a chance for the clubs to arrange events before games or post-game events which could last for more than 30 minutes. On the other hand, there are only four active clubs in the league. This could represent a limiting factor for most spectators because only six types of game combinations are arranged for 240 games in one season making difficult to create unique and extraordinary experiences. From a market perspective, there is one club in the capital area (i.e., there are two cities in the capital area: Taipei city and New Taipei city where nearly 30% of the population[9] live) and no club in Kaohsiung city, which is the second largest city in Taiwan. The current research suggests that there is a market opportunity for having more clubs in the league, and it could offer different game combinations and experiences for spectators. Therefore, the league has to recruit more clubs to increase a variety of club matches in order to have an impact on the ranking and other opportunities for enhancing extraordinary experiences.

2. Clubs

As the finding of the current research, the role of consumer experience is conformed as one of the antecedent variables of consumer satisfaction and loyalty. Therefore, the current research supports the framework which is proposed by Walls, et al. (2011). A holistic consumer

[9] Monthly Bulletin of Interior Statistics, http://sowf.moi.gov.tw/stat/month/list.htm

experience includes internal elements, such as cognitive/emotive; ordinary/extraordinary and external elements, individual characteristics, human interaction element, physical experience elements, and situational factors. Based on the framework and the findings, the current research makes some suggestions:

(1) Consumer experience is more influential than service quality, but the effect of service quality is more efficient in the CPBL game.

The findings of the current research support the standpoint of Mascarenhas, et al. (2006) who concluded that consumer experience impacts consumer loyalty. Building a capacity to create holistic consumer experience is one important way to optimise consumer loyalty. Assessment of both physical attributes (e.g. service quality) and emotional aspects (e.g. consumer experiences) is important for creating holistic consumer experiences. Palmer (2010) claimed that consumer experience is complex and non-linear. Multi-dimensional contact between product or service providers and consumers is a common situation for creating more holistic consumer experiences. In other words, there is no sequence or order in creating holistic consumer experiences. Clubs should ensure that service quality (physical attributes) is kept at a good level and attempt to create various positive and memorable consumer experiences (emotional attributes) at the same time. However, the current research suggests that CPBL clubs should start by improving service quality and then maintain consumer experience in order to enhance consumer satisfaction and loyalty. When service quality is improved and spectators' satisfaction is reached, experiential marketing strategies can then be implemented in order to complete the holistic consumer experience. For instance, the stadium is owned by the local government which means club rents the place for having games instead of acquiring the operating rights transferred from the local government. This means the club cannot improve facilities before informing the local authority, or have any permanent club identification or print in the stadium.

(2) Linking controllable and uncontrollable extraordinary experiences together in order to strengthen extraordinary experiences.

Although Koo, et al. (2009) suggested that understanding and enhancing all types of experiences during games are important, and Schmitt's (1999) experiential marketing approach emphasised that creating an holistic consumer experience is a key issue, focusing on providing extraordinary experiences with emotional aspects is more efficient for conducting an experiential marketing approach (Carù & Cova, 2003). Moreover, Skard, et al. (2011) described that consumer experiences can be seen as outcomes of multiple touch points which may be direct or indirect, controllable or non-controllable between the product or service and the consumer. According to the findings of the current research, some spectators attend live games without being satisfied because they are enthusiastic about baseball. Extraordinary experiences in CPBL could be found when a player achieves a special record or if the game determines a particular ranking position. This means uncertainty is a specific characteristic in the sport events which cannot be predicted or controlled in advance. The uncertain elements within games could play a vital role in creating extraordinary experiences in CPBL games. Therefore, the current research suggests that paying attention to and anticipating possible extraordinary experiences can strengthen the effect of extraordinary experiences, and can simply recruit more clubs to join the league in order to create uncertainty for increasing extraordinary experiences. On the other hand, another good example of that is when a player produces extraordinary performances; these extraordinary experiences can only be reinforced by the clubs afterwards. Those extraordinary experiences cannot be controlled in advance, but they could be extended and linked with other events which clubs are able to control. Thus, linking controllable and uncontrollable experiences is important for CPBL clubs. Clubs' marketers should focus on those extraordinary experiences which are created by the uncertainty elements and provide additional extraordinary experiences on top of them. In other words, although those extraordinary performances are beyond sport marketers' control, those events could add value when they are strongly linked with spectators'

consumer experience and service quality. For example, a player who has performed 995 hits in his carrier and could perform his NO. 10000 hit in the following few games. Sport marketers cannot know when it will occur, but sport marketers can prepare celebration and souvenirs so as to encourage spectators to attend live games and this also brings more benefits for clubs.

(3) Demographic and behavioural variables should be taken into consideration within the experiential marketing approach.

As defined by various scholars (e.g. Palmer, 2010; Skard, et al., 2011), consumer experiences are subjective, dynamic, internal or mental, direct or indirect, controllable or non-controllable. These characteristics demonstrate that the outcomes of consumer experience could highly depend on individual characteristics (e.g. age, education, or gender). Moreover, Walls et al. (2011) indicated that individual characteristics represent one external element of consumer experience which means that those characteristics are able to affect how consumers perceive their experience. The current research found that the tendencies of the demographic and behavioural variables (e.g. the increasing percentage of female spectators; most spectators being young and enthusiastic about baseball, and the frequency of attending a live game is correlated with club's preference) offer some useful information for club marketers when they try to set up an experiential marketing approach. For example, the current research found that female spectators rated consumer experiences higher than male spectators. Those characteristics provide more information for club marketers to create a holistic consumer experience properly in terms of gender consideration.

(4) The specific characteristics of the CPBL are important for conducting experiential marketing.

The relationship between extraordinary experiences and situational factors in spectator sport events was discussed in the section dealing with the theoretical implications. Although the influence of some specific characteristics which were identified with the focus groups (e.g.

different stadia, weekday or weekend) were not fully confirmed in the model comparisons, those specific characteristics could still provide a basic concept of multiple-points assessment of consumer experience in order to gain a better understanding of consumer experiences in the CPBL games. Following the suggestions of Carù and Cova (2003), and Walls, et al. (2011), those specific characteristics could help the CPBL clubs to address what extraordinary experiences are for spectators and in which circumstances they are able to control or engage in conducting experiential marketing approaches. Thus, clubs have to keep investigating more specific characteristics which are highly situational and conceptual as they vary within and across sports, countries, cultures, crowds, leagues, clubs, and stadia, in order to ensure the efficiency of conducting an experiential marketing approach.

(5) Regional identification should be considered in order to establish a foundation of providing a holistic consumer experience.

Wang, et al. (2011) claimed that the CPBL has a unique feature, which is that the clubs in the league do not represent any particular city or region. All clubs arrange games across the island of Taiwan. Thus, the concept of regional identification does not exist in the league, and regional loyalty is not strong as in other professional baseball leagues around the world. The reason for clubs arranging games across Taiwan instead in one particular city is because they try to attract as many spectators as they can. However, it could restrict the investment in terms of quality of the surrounding environment (e.g. stadium) by clubs and the club supporters' willingness to attend live games. On the other hand, the framework proposed by Walls, et al. (2011) demonstrated that physical experience and human interaction are two important external elements of consumer experience. This indicates that clubs have to provide a good surrounding environment for enhancing consumer experience by improving those two external elements. A good example of that are the Lamigo Monkeys. The club changed its name and mascot in order to resemble, in the pronunciation, the city name. The club was the only club which has

management and administrative rights of the Taoyuan Int'l Stadium. Lamigo Monkeys was the only club which had an exclusive food and merchandise shop in the stadium. The club tried to design a series of uniform for players and staff for home games and even exclusive clothes for loyal spectators. The regional identification increased the Lamigo Monkeys spectators' consumer experience and service quality. It was also distinguished as an extraordinary experience provider in comparison with other clubs. Therefore, arranging games across the whole of Taiwan could bring more spectators but limit local spectators' support, which can create serious issues for the long-term development of the club. Thus, the current research suggests that clubs could arrange their home games around Taiwan, but the development of physical experience and human interaction element in the home stadium should also be considered. This will help clubs to create more opportunities to offer positive and memorable extraordinary experiences to spectators.

7.4 Limitations and directions for further research

This section deals with the limitations of the research and future directions for research about consumer experience. The limitations include the questionnaire's measures, the sampling strategy, and ethical issues. Further research directions could focus on the boundary between ordinary and extraordinary consumer experiences or the situational factors of external consumer experience in sport spectating events, assessing the causal effect of consumer experience on a ladder of consumer loyalty. All of these limitations and possible directions for future research are discussed in the following sections.

7.4.1 Limitations

There are five limitations which were found in the current research. All of them are discussed here:

1. The concept of consumer experience in sport spectating events.

The specific characteristic of sport spectating events is uncertainty. This means the core product in sport spectating events is unpredictable. For instance, how the players will perform and which club wins or loses the game is unknown. These issues cannot be predicted or guaranteed. However, they correlate with spectators' perceptions and the boundary between extraordinary and ordinary experiences. In other words, the concept of consumer experience in sport spectating events includes a dynamic boundary between ordinary and extraordinary experiences. It is not easy to find a game which can be a pure ordinary or extraordinary experience because of this uncertainty element. The findings of the current research could be influenced by the uncertainty of consumer experience in sport spectating events. An experimental research approach and/or a long-term observation, as suggested by Palmer (2010), could be solutions for evaluating ordinary and extraordinary experiences in sport spectating events. However, this is not easy to accomplish at a baseball game with spectators, staff, and because the duration of the event is about 3-4 hours.

2. Sustained consumer experience

The quantitative data were collected immediately after the games, when spectators walked out of the stadium. Although the game was finished, spectators could still be overwhelmed by the game. They did not have time to digest their experience and had to answer the questionnaire immediately. Thus, their answers could have been strongly influenced by affective and emotional factors. Following Palmer's (2010) suggestion, longer-term observation is a possible way to get round this bias. For example, the research could collect data from the same or different spectators at various times (e.g. during the game, when the game is finished, and the day after the game). However, it is a long-term research project, which needs more time and resources. Moreover, the Halo effect could strongly affect spectators' feedback because of sustained consumer experience. Spectators' feedback could be over or under assessed to the effect of

consumer experience evolution. A good example of that is a group of young spectators who attend and really enjoy the game. Their responses may be exaggerated because their pre-game positive experiences could be combined with their spectating experiences. There is a similar phenomenon that when a spectator has had a bad day, as his or her responses could be affected.

3. The questionnaire's measurements

Time pressure was high during the data collection because games usually started at 6:30pm and finished around 10:00 pm. Most spectators were tired and wanted to go home as soon as possible after the games. Moreover, the CPBL code of conduct stipulates that all spectators should have left the stadium within 30 minutes. The current research could not use as many measurement dimensions and items as expected to ensure the questionnaire was filled in a short period of time. Another limitation relies on the fact that loyalty was only measured by its attitudinal dimension and that repurchase behaviour could have been considered – especially given that Bodet and Chanavat (2010), and Chanavat and Bodet (2009) found that attitudinal loyalty was not necessarily predictive of behavioural loyalty and repurchase behaviour. In conclusion, the current research believes that it will be earlier to construct a consumer experience related questionnaire if other measurement variables could be simplified.

4. Ethical issue

During the qualitative and quantitative data collection, many spectators who were elementary or secondary school students wanted to take part in the research. However, permission from their guardians was needed to survey spectators who were under 18 years old, which was not possible to achieve. Therefore, this population had to be dismissed from the study. Consequently, the data do not include an important segment of spectators.

7.4.2 Directions for further research

Generally speaking, Walls, et al. (2011) suggested that there are several possible future research directions about consumer experience, and Schmitt (2011) gave some possible examples

of this. First, taxonomy, and classification of experience: the construct of experience has not been completely discussed. There are some discordant definitions, classifications, or perspectives which need further discussion. Second, examining the causes or explaining experiences. For instance, how do experiential stimuli at multi-dimensional touch-points create consumer experiences? How can consumer experiences influence consumer behaviours in both the short and the long term? How environments and cultural contexts can shape experiences? Third, a possible research direction is to compare the relationship between consumer experience and other constructs. For example, what is the relationship between consumer experience and consumer value? The current research proposes some directions of further research, which are based on Walls, et al.'s (2011) framework.

1. Focusing on the boundary between ordinary and extraordinary consumer experiences or the situational factors influencing consumer experience at spectator sport events.

   The current research identified that there is some uncertainty about what is ordinary and what is extraordinary. Whether a game could be considered to be fully ordinary or partly extraordinary could depend on the outcome of the game. Thus, identifying ordinary and extraordinary experiences in sport spectating events need to take this issue into consideration this issue. A more accurate classification of ordinary and extraordinary experiences in sport spectating events will help further research to address consumer experience properly. One example is that different attendance levels could affect spectators' judgement of ordinary or extraordinary experiences. This could be an issue for further research. The current research compared some specific characteristics of the CPBL such as ordinary or extraordinary clubs, different days and different stadia in order to address the influence of consumer experience in terms of situational factors. However, there are many situational factors which were not considered in the current research. For example, the outcome of the game and other cultural factors could be important situational factors which influence consumer experience

significantly. Therefore, the current research suggests that when more situational factors can be considered, consumer experience can be addressed more clearly.

2. Assessing the causal effect of consumer experience on consumer loyalty levels.

Mascarenhas, et al. (2006) developed a consumer loyalty ladder from Raphael and Raphael (1995), Banks and Daus (2002), and Narayanddas (2005). The ladder demonstrates the dynamic of consumer loyalty. It would be good if further studies were able to measure consumer experience and loyalty in order to examine more closely how consumer experiences directly affect loyalty and what level of consumer loyalty can be matched with various levels of consumer experience. In short, consumer experience and loyalty are assessed within a dynamic approach to draw a clear web of consumer experiences and loyalty levels. In sport spectating events, it could be interesting to identity which types of consumer experiences are perceived more significantly by spectators according to their level of loyalty. For example, die-hard fans and recreational spectators have different levels of loyalty and seem to appreciate experiences differently as shown by Bodet & Chanavat (2011) with the Stade Français example. These authors even found that certain experiences, especially those engineered through an experiential marketing approach, could generate dissatisfaction and disapprobation from the more loyal and attached fans. Thus, further research could focus on the types of consumer experience of at least two groups of spectators in order to address the specific causal effects of both consumer experience and loyalty.

3. The connection between Experiential Marketing and other issues in sport events

Lavidge and Steiner (1961) suggested a model of advertising effectiveness which indicates that the affective dimension is the realm of emotions. This realm determines consumers' preference. Measuring brand preference is the main target of this realm. Thus, the linkage between experiential marketing and branding in sport events is a potential issue. Bauer, et al. (2005) confirmed the conclusion made by Gladden and Milne (1999) that brand is one of the

key successful factors for professional sport clubs. Brand equity has a positive effect on attendance, purchase intention, brand loyalty and price premiums. Keller (1993, 2003) described that brand equity can be seen as the effect of brand knowledge on consumer reaction to the marketing of the brand. Brand knowledge includes consumer experience which provides a deeper understanding of how consumers' feel, think and act so as to have guidance for addressing the challenges of brand management. It is not only bringing economic success for clubs, but also helps club marketers to conduct different marketing approaches (e.g., experiential marketing). Keller and Lehmann (2006) claimed that brands are able to create different types of experiences. Some related issues here are: how does consumer experience contributes to brand equity? How can consumer experiences - especially those connected with brands be controlled?

Moreover, in sport spectating events, both sponsor and spondee' brand image can be improved if there is an interactive sponsorship system between them (Chanavat, et al., 2010). Ferrand and Pagès (1999) indicated that brand image is able to create value by affecting and changing consumer behavior. Chanavat, et al. (2009) confirmed that sponsees and sponsors brand image, and brand attachment are important dimensions for understanding spectators' consumer loyalty (i.e., especially intention to purchase sponsor's products). Ferrand and Pagès (1999) and Gladden and Funk (2001) believed that brand image, brand equity, and brand associations are important issues in sport spectating events. Richelieu and Desbordes (2009) also claimed that branding in sport spectating events is able to encourage the internationalisation of sports. In conclusion, if could be relevant to further investigate the link between experiential marketing and branding strategies and, particularly, how it is connected with other issues such as sponsorship, and sport internationalisation.

References

Abbott, L. (1955). *Quality and competition: An essay in economic theory*. New York, NY: Columbia University Press.

Abrahams, R. D. (1986). Ordinary and extraordinary experience. In V. W. Turner, & E. M. Bruner (Eds.), *The anthropology of experience* (pp. 45-72). Chicago, IL: University of Illinois Press.

Addis, M. & Holbrook, M. B. (2001). On the conceptual link between mass customisation and experiential consumption: An explosion of subjectivity. *Journal of Consumer Behaviour, 1*(1), 50-66.

Agus, A. (2004). TQM as a focus for improving overall service performance and customer satisfaction: An empirical study on a public service sector in Malaysia. *Total Quality Management & Business Excellence, 15*(5-6), 615-628.

Alexandris, K., Zahariadis, P., Tsorbatzoudis, C., & Grouios, G. (2004). An empirical investigation of the relationships among service quality, customer satisfaction, and psychological commitment in a health club context. *European Sport Management Quarterly, 4*(1), 36-52.

Anderson, E. W., & Sullivan, M. W. (1993). The antecedents and consequences of customer satisfaction for firms. *Marketing Science, 12*(2), 125-143.

Anderson, E. W., Fornell, C., & Lehmann, D. R. (1994). Customer satisfaction, market share, and profitability: Findings from Sweden. *Journal of Marketing, 58*(3), 53.

Anderson, J. C., & Gerbing, D. W. (1988). Structural equation modeling in practice: A review and recommended two-step approach. *Psychological Bulletin, 103*(3), 411-423.

Anderson, J. C., & Narus, J. A. (1990). A model of distributor firm and manufacturer firm working partnerships. *The Journal of Marketing, 54*(1), 42-58.

Araghchi, S. A. (2008). *Service quality, customer satisfaction, customer experience and behavioral intention in Iranian retail stores*. Unpublished master dissertation, Luleå University of Technology, Luleå, Sweden.

Armstrong, K. L. (1999). Nike's communication with black audiences A sociological analysis of advertising effectiveness via symbolic interactionism. *Journal of Sport & Social Issues, 23*(3), 266-286.

Arnould, E. J., & Price, L. L. (1993). River magic: Extraordinary experience and the extended service encounter. *Journal of Consumer Research, 20*(1), 24-45.

Athanassopoulos, A., Gounaris, S., & Stathakopoulos, V. (2001). Behavioural responses to customer satisfaction: An empirical study. *European Journal of Marketing, 35*(5/6), 687-707.

Avolio, B. J., Yammarino, F. J., & Bass, B. M. (1991). Identifying common methods variance with data collected from a single source: An unresolved sticky issue. *Journal of Management, 17*(3), 571-587.

Backman, S. J., & Crompton, J. L. (1991). The usefulness of selected variables for predicting activity loyalty. *Leisure Sciences, 13*(3), 205-220.

Bagozzi, R. P., & Yi, Y. (1990). Assessing meihod variance in multitrait-mjltilffilhcd matrices: The case of self-reported affect and perceptions at work. *Journal of Applied Psychology, 75*, 547-560.

Banks, D., & Daus, K. (2002). *Customer community: Unleashing the power of your customer base*. San Francisco, CA: Jossey-Bass.

Bansal, H. S. & Taylor, S. F. (1999). The service provider switching model (SPSM): a model of consumer switching behaviour in the service industry. *Journal of Service Research, 2*(2), 200-218.

Barnes, B. R., Fox, M. T., & Morris, D. (2004). Exploring the linkage between internal marketing, relationship marketing and service quality: A case study of a consulting organization. *Total Quality Management & Business Excellence, 15*(5-6), 593-601.

Bartikowski, B., & Llosa, S. (2004). Customer satisfaction measurement: Comparing four methods of attribute categorisations. *The Service Industries Journal, 24*(4), 67-82.

Bauer, H. H., Sauer, N. E. & Schmitt, P. (2005). Customer-based brand equity in the team sport industry: Operationalization and impact on the economic success of sport teams. *European Journal of Marketing, 39*(5/6), 496-513.

Bauer, H. H., Stokburger-Sauer, N. E., & Exler, S. (2008). Brand image and fan loyalty in professional team sport: A refined model and empirical assessment. *Journal of Sport Management, 22*(2), 205-226.

Bearden, W. O., & Teel, J. E. (1983). Selected determinants of consumer satisfaction and complaint reports. *Journal of Marketing Research, 20*(1), 21-28.

Belk, R. W., Wallendorf, M., & Sherry Jr, J. F. (1989). The sacred and the profane in consumer behavior: Theodicy on the odyssey. *Journal of Consumer Research, 16*(1), 1-38.

Bentler, P. M. (2005). *EQS 6 structural equations program manual. Encino*, CA: Multivariate Software.

Berry, L. L., Carbone, L. P., & Haeckel, S. H. (2002). Managing the total customer experience. *MIT Sloan Management Review, 43*(3), 85-89.

Bhaskar, R. (1979). *The possibility of naturalism: A philosophical critique of the contemporary human sciences* (1st Eds.). Brighton, UK: Harvester Press.

Bhaskar, R. (1986). *Scientific realism and human emancipation*. London, UK: Verso.

Bhaskar, R. (1997). *A realist theory of science*. London, UK: Verso.

Bigné, J. E., Mattila, A. S., & Andreu, L. (2008). The impact of experiential consumption cognitions and emotions on behavioral intentions. *Journal of Services Marketing, 22*(4), 303-315.

Birrell, S. (1981). Sport as ritual: Interpretations from Durkheim to Goffman. *Social forces, 60*(2), 354-376.

Biscaia, R., Correia, A., Rosado, A., Maroco, J., & Ross, S. (2012). The effects of emotions on football spectators' satisfaction and behavioural intentions. *European Sport Management Quarterly, 12*(3), 227-242.

Bitner, M. J. (1990). Evaluating service encounters: The effects of physical surroundings and employee responses. *The Journal of Marketing, 54*(2), 69-82.

Bitner, M. J., & Hubbert, A. R. (1994). Encounter satisfaction versus overall satisfaction versus quality. *Service Quality: New Directions in Theory and Practice*, 72-94.

Blaikie, N. W. (1993). *Approaches to social enquiry*. New York, NY: John Wiley & Sons.

Blaikie, N. W. (2009). *Designing social research*. Cambridge, UK: Polity.

Bloemer, J. M., & Kasper, H. D. (1995). The complex relationship between consumer satisfaction and brand loyalty. *Journal of Economic Psychology, 16*(2), 311-329.

Bodet, G. & Chanavat, N. (2011, September). Experiential marketing and sporting events: A spectator perspective. *The 19th Conference of the European Association for Sport Management*, Madrid, Spain. Article retrieved from https://dspace.lboro.ac.uk/dspace-jspui/handle/2134/10095.

Bodet, G. (2006). Investigating customer satisfaction in a health club context by an application of the tetraclasse model. *European Sport Management Quarterly, 6*(2), 149-165.

Bodet, G. (2008). Customer satisfaction and loyalty in service: Two concepts, four constructs, several relationships. *Journal of Retailing and Consumer Services, 15*(3), 156-162.

Bodet, G., & Bernache-Assollant, I. (2011). Consumer loyalty in sport spectatorship services: The relationships with consumer satisfaction and team identification. *Psychology and Marketing, 28*(8), 781-802.

Bodet, G., & Chanavat, N. (2010). Building global football brand equity: lessons from the Chinese market. *Asia Pacific Journal of Marketing and Logistics, 22,* (1), 55-66.

Bollen, K. A. (1989). *Structural equations with latent variables*. New York, NY: John Wiley & Sons.

Bollen, K. A. (1990). Overall fit in covariance structure models: Two types of sample size effects. *Psychological Bulletin, 107*(2), 256-259.

Bollen, K. A., & Long, J. S. (1993). *Testing structural equation models*. Thousand Oaks, CA: Sage.

Bollen, K. A., & Stine, R. A. (1992). Bootstrapping goodness-of-fit measures in structural equation models. *Sociological Methods & Research, 21*(2), 205-229.

Bolton, R. N., & Drew, J. H. (1991). A multistage model of customers' assessments of service quality and value. *Journal of Consumer Research, 17*(4), 375-384.

Boomsma, A., & Hoogland, J. J. (2001). The robustness of LISREL modeling revisited. In R. Cudeck, S. du Toit & D. Sörbom (Eds.), *Structural Equation Modeling: Present and Future. A Festschrift in honor of Karl Jöreskog* (pp. 139-168). Lincolnwood, IL: Scientific Software International.

Bouchet, P., Bodet, G., Bernache-Assollant, I., & Kada, F. (2011). Segmenting sport spectators: Construction and preliminary validation of the sporting event experience search (SEES) scale. *Sport Management Review, 14*(1), 42-53.

Bourgeon, D., & Bouchet, P. (2001). La recherche d'experiences dans la consommation du spectacle sporitf. [Experience seeking in the sporting event consumption] *Human Relations, 45*, 1013-1033.

Bowen, J. T., & Chen, S. L. (2001). The relationship between customer loyalty and customer satisfaction. *International Journal of Contemporary Hospitality Management, 13*(5), 213-217.

Brady, M. K. & Cronin Jr., J. J. (2001). Some new thoughts on conceptualizing perceived service quality: a hierarchical approach, *Journal of Marketing, 65*(3), 34-49.

Brady, M. K., Cronin Jr., J. J., & Brand, R. R. (2002). Performance-only measurement of service quality: A replication and extension. *Journal of Business Research, 55*(1), 17-31.

Brady, M. K., Knight, G. A., Cronin Jr., J. J., Tomas, G., Hult, M., & Keillor, B. D. (2005). Removing the contextual lens: A multinational, multi-setting comparison of service evaluation models. *Journal of Retailing, 81*(3), 215-230.

Brady, M. K., Robertson, C. J., & Cronin Jr., J. J. (2001). Managing behavioral intentions in diverse cultural environments: An investigation of service quality, service value, and satisfaction for American and Ecuadorian fast-food customers. *Journal of International Management, 7*(2), 129-149.

Brady, M. K., Voorhees, C. M., Cronin Jr., J. J., & Bourdeau, B. L. (2006). The good guys don't always win: the effect of valence on service perceptions and consequences. *Journal of Services Marketing, 20*(2), 83-91.

Brakus, J. J., Schmitt, B. H., & Zarantonello, L. (2009) Brand experience: What is it? How is it measured? Does it affect loyalty? *Journal of Marketing, 73*(3), 52-68.

Braunstein, J., & Zhang, J. (2005). Dimensions of athletic star power associated with generation Y sports consumption. *International Journal of Sports Marketing and Sponsorship, 6*(4), 242.

Brentano, F. (1995). *Psychology from an empirical standpoint*. London, UK: Routledge.

Brown, S., Kozinets, R. V., & Sherry Jr, J. F. (2003). Teaching old brands new tricks: Retro branding and the revival of brand meaning. *Journal of Marketing, 67*, 19-33.

Browne, M. W., & Cudeck, R. (1992). Alternative ways of assessing model fit. *Sociological Methods & Research, 21*(2), 230-258.

Bruner, J. S. (1986). *Actual minds, possible worlds* (2nd Eds.). Cambridge, MA: Harvard University Press.

Bryman, A. (2008). *Social research methods* (3rd Eds.). Oxford, UK: Oxford University Press.

Burton, S., Sheather, S., & Roberts, J. (2003). Reality or perception? The effect of actual and perceived performance on satisfaction and behavioral intention. *Journal of Service Research, 5*(4), 292-302.

Byrne, B. M. (2010). *Structural equation modeling with AMOS: Basic concepts, applications, and programming* (2nd Eds.). Hillsdale, NJ: Lawrence Erlbaum Associates.

Byrne, B. M., Shavelson, R. J., & Muthén, B. (1989). Testing for the equivalence of factor covariance and mean structures: The issue of partial measurement invariance. *Psychological Bulletin, 105*(3), 456-466.

Cai, Z. (2008). *The discussions of the habits and acquired characteristics that the Chinese duty baseball fan watches the match*. Proceedings International Conference: Trends in PE, Sports, Health Leisure Conference Journal, pp. 553-568.

Cardozo, R. N. (1965). An experimental study of customer effort, expectation, and satisfaction. *Journal of Marketing Research, 2*(3), 244-249.

Carlson, J., & O'Cass, A. (2010). Exploring the relationships between e-service quality, satisfaction, attitudes and behaviours in content-driven e-service web sites. *Journal of Services Marketing, 24*(2), 112-127.

Carmines, E. G., & McIver, J. P. (1981). Analyzing models with unobserved variables: Analysis of covariance structures. In G. W. Bohmstedt, & E. F. Borgatta (Eds.), *Social measuremnet: Current issues* (pp. 65-115). Thousand Oaks, CA: Sage.

Caro, L. M., & Garcia, J. A. M. (2007). Cognitive-affective model of consumer satisfaction. an exploratory study within the framework of a sporting event. *Journal of Business Research, 60*(2), 108-114.

Carr, W., & Kemmis, S. (2003). *Becoming critical: Education knowledge and action research*. London, UK: Routledge.

Carù, A., & Cova, B. (2003). Revisiting consumption experience: A more humble but complete view of the concept. *Marketing Theory, 3*(2), 267-286.

Caruana, A., Money, A. H., & Berthon, P. R. (2000). Service quality and satisfaction–the moderating role of value. *European Journal of Marketing, 34*(11/12), 1338-1353.

Chamberlain, G. P. (2006). Researching strategy formation process: An abductive methodology. *Quality and Quantity, 40*(2), 289-301.

Chanavat, N., & Bodet, G. (2009). International isation and sport branding strategy: A French perception of the big four brands. Qualitative Market ~Research: An International Journal, 12(4), 460-481.

Chanavat, N., Martinent, G., & Ferrand, A. (2009). Sponsor and sponsees interactions: Effects on consumer's perceptions of brand image, brand attachment, and purchasing intention. *Journal of Sport Management, 23*(5), 644-670.

Chanavat, N., Martinent, G., & Ferrand, A. (2010). Brand images causal relationships in a multiple sport event sponsorship context: Developing brand value through association with sport sponsees. *European Sport Management Quarterly, 10*(1), 49-74.

Chang, W. H. (2011). *Sturcutral equation modeling*. Taipei: Tingmao.

Chang, W. H., & Cheng, S. Y. (2012). *Dances with structural equation modeling: Episode I: A new generation.* New Taipei, Taiwan: Future Career.

Chao, C. U. (2000). *A comparison study of customer satisfaction of the audience between government managed professional baseball field and government controlled private enterprise managed professional baseball field - exemplified by municiple Taipei baseball field and munici.* Unpublished master disseration, National Taiwan Normal University, Taipei, Taiwan.

Chen, C. F. (2008). Investigating structural relationships between service quality, perceived value, satisfaction, and behavioural intentions for air passengers: Evidence from Taiwan. *Transportation Research Part A: Policy and Practice, 42*(4), 709-717.

Chen, C. F., & Tsai, D. C. (2007). How destination image and evaluative factors affect behavioural intentions? *Tourism Management, 28*(4), 1115-1122.

Chen, Y. H. (2005). *A study on structural relationships between involvement, satisfaction, team identity and loyalty for professional baseball fans.* Unpublished master dissertation, National Chiayi University, Chiayi, Taiwan.

Chen, Y. H., & Chien, T. W. (2005). The confirmatory study of impact on fans repurchase intention by service, quality and loyalty in Chinese Professional Baseball League (CPBL) and teams: Case study in central. *MingDao Journal, 1*(1), 93-104.

Cheng, N. C., & Yu, H. C. (2009). An examination of the relationship between experiential marketing, participative motivation, customer satisfaction, and customer loyalty: The national Taiwan university indoor swimming pool. *17th EASM Conference*, Pathé ArenA, Amsterdam, Netherlands. pp. 216-218.

Cheng, N. C., Tzeng, L. C., & Wang, P. Y. (2003). The factors that infulence participation behaviour and satisfaction of fans- in case of Lions in Tainan city. *Journal of Business Administration, 58*, 1-27.

Cheung, G. W., & Rensvold, R. B. (2002). Evaluating goodness-of-fit indexes for testing measurement invariance. *Structural Equation Modeling, 9*(2), 233-255.

Chi, C. G. Q., & Qu, H. (2008). Examining the structural relationships of destination image, tourist satisfaction and destination loyalty: An integrated approach. *Tourism Management, 29*(4), 624-636.

Chiu, H. C. (2006). *Quantitative research and statistical analysis in social & behavioural sciences* (3rd Eds.). Taipei, Taiwan: Wu-Nan.

Cho, B. H., Lee, C. & Chon, T. J. (2004). Effect of customers' service quality satisfaction for repurchase of golf range user. *Korean Journal of Physical Education, 42*(2), 179-188.

Choi, T. Y., & Chu, R. (2001). Determinants of hotel guests' satisfaction and repeat patronage in the Hong Kong hotel industry. *International Journal of Hospitality Management, 20*(3), 277-297.

Chung, C. C. (1992). *A study of professional baseball fan club's consuming behaviour.* Unpublished master dissertation, National College of Physical Education and Sports, Taoyuan, Taiwan.

Chung, C. C. (2008). The relationship between the consumer experience and the behavioural intention in professional baseball. *Annual Journal of Physical Education, 10*(1), 35-45.

Churchill Jr, G. A., & Surprenant, C. (1982). An investigation into the determinants of customer satisfaction. *Journal of Marketing Research, 19*(4), 491-504.

Churchill, G. A., & Iacobucci, D. (2010). *Marketing research: Methodological foundations*. Mason, OH: South-Western Cengage Learning.

Clemes, M. D., Brush, G. J., & Collins, M. J. (2011). Analysing the professional sport experience: A hierarchical approach. *Sport Management Review, 14*(4), 370-388.

Council of Labor Affairs. (2012, September 11). *Labor standards act: Current working hours system.* Retrieved October 30, 2012, from the World Wide Web: http://www.cla.gov.tw/cgi-bin/siteMaker/SM_theme?page=4333601c

CPBL (2011, March, 03), C. *History of CPBL*. [Official Website] Retrieved March 03, 2011, from the World Wide Web: http://www.cpbl.com.tw/english/History.asp

Creswell, J. W. (2005). *Educational research: Planning, conducting, and evaluating quantitative and qualitative research* (2nd Eds.). Columbus, OH: Merrill Prentice Hall.

Crompton, J. L., MacKay, K. J. & Fesenmaier, D. R. (1991). Identifying dimensions of service quality in public recreation, *Journal of park and recreation administration, 9*(3), 15-27.

Cronin Jr, J. J., & Taylor, S. A. (1994). SERVPERF versus SERVQUAL: Reconciling performance-based and perceptions-minus-expectations measurement of service quality. *The Journal of Marketing, 58*(1), 125-131.

Cronin Jr, J. J., Brady, M. K., & Hult, G. T. M. (2000). Assessing the effects of quality, value, and customer satisfaction on consumer behavioural intentions in service environments. *Journal of Retailing, 76*(2), 193-218.

Cruickshank, J. (2003a). *Critical realism: The difference it makes*. New York, NY: Routledge.

Cruickshank, J. (2003b). Underlabouring and unemployment. notes for developing a critical realist approach to the agency of the chronically unemployed. In Cruickshank (Eds.), *Critical realism: The difference that it maskes* (pp. 111-127). London, UK: Routledge.

Dabholkar, P. A., Shepherd, C. D., & Thorpe, D. I. (2000). A comprehensive framework for service quality: An investigation of critical conceptual and measurement issues through a longitudinal study. *Journal of Retailing, 76*(2), 139-173.

Dagger, T. S., & Sweeney, J. C. (2007). Service quality attribute weights: How do novice and longer-term customers construct service quality perceptions? *Journal of Service Research, 10*(1), 22-42.

Dagger, T. S., Sweeney, J. C., & Johnson, L. W. (2007). A hierarchical model of health service quality: Scale development and investigation of an integrated model. *Journal of Service Research, 10*(2), 123-142.

Dale, B., Iwaarden, J. V., Wiele, T. V. D. & Williams, R. (2005). Service improvements in a sports environment: a study of spectator attendance. *Managing Service Quality, 15*(5), 470-784.

Danermark, B., Ekström, M., Jakobsen, L., & Karlsson, J. C. (2002). *Explaining society: Critical realism in the social sciences*. London, UK: Routledge.

De Chernatony, L., & McDonald, M. (2003). *Creating powerful brands*. Oxford, UK: Butterworth-Heinemann.

De Rojas, C., & Camarero, C. (2008). Visitors' experience, mood and satisfaction in a heritage context: Evidence from an interpretation center. *Tourism Management, 29*(3), 525-537.

Dewey, J. (1925). *Experience and natur*. Chicago, IL: Kessinger Publishing.

Diamantopoulos, A., & Siguaw, J. A. (2000). *Introducing LISREL: A guide for the uninitiated*. Thousand Oaks, CA: Sage.

Dick, A. S., & Basu, K. (1994). Customer loyalty: Toward an integrated conceptual framework. *Journal of the Academy of Marketing Science, 22*(2), 99-113.

Ding, L., Velicer, W. F., & Harlow, L. L. (1995). Effects of estimation methods, number of indicators per factor, and improper solutions on structural equation modeling fit indices. *Structural Equation Modeling: A Multidisciplinary Journal, 2*(2), 119-143.

Dobson, P. J. (1999). *Approaches to theory use in interpretive case studies-a critical realist perspective*. Proceedings of the 10th Australasian Conference on information system, 259-270.

Doll, W. J., Xia, W., & Torkzadeh, G. (1994). A confirmatory factor analysis of the end-user computing satisfaction instrument. *MIS Quarterly, 18*(4), 453-461.

Dorwart, C. E., Moore, R. L., & Leung, Y. (2009). Visitors' perceptions of a trail environment and effects on experiences: A model for nature-based recreation experiences. *Leisure Sciences, 32*(1), 33-54.

Downward, P., & Mearman, A. (2007). Retroduction as mixed-methods triangulation in economic research: reorienting economics into social science. Cambridge *Journal of Economics, 31*(1), 77-99.

Driscoll, M. P. (2005). *Psychology of learning for instruction*. Boston, MA: Allyn & Bacon.

Drotskie, A. (2009). *Customer experience as the strategic differentiator in retail banking*. Unpublished PhD dissertation, Stellenbosch University, Stellenbosch, South Africa.

Easton, G. (1995). Methodology and industrial networks. In K. Möller & D. Wilson (Eds.), *Business marketing: An interaction and network perspective* (pp. 411-492). Boston, MA: Kluwer Academic.

Edgell, S., Hetherington, K. & Warde, A. (1997). *Consumption matters: The production and experience of consumption*. Oxford, UK: Blackwell.

Engel, J. F., Blackwell, R. D., & Miniard, P. W. (1995). *Consumer behaviour* (8th Eds.). New York, NY: The Dryden Press.

Ertmer, P. A., & Newby, T. J. (1993). Behaviorism, cognitivism, constructivism: comparing critical features from an instructional design perspective. *Performance Improvement Quarterly, 6* (4), 50-72.

Fan, C. H. (2008). The study on Chinese professional baseball league fans' loyalty, brand associations and purchase intentions of team accessory product. Unpublished master disseration, National University of Tainan, Taianan, Taiwan.

Fan, X., Thompson, B., & Wang, L. (1999). The effects of sample size, estimation methods, and model specification on SEM fit indices. *Structural Equation Modeling, 6*, 56-83.

Ferrand, A., & Pagès, M. (1999). Image management in sport orginsations: The creation of value. *European Journal of Sport Management, 10*(3), 278-291.

Ferrand, A., Robinson, L., & Valette-Florence, P. (2010). The intention-to-repurchase paradox: A case of the health and fitness industry. *Journal of Sport Management, 24*(1), 83-105.

Filser, M. 2002, "Le marketing de la production d'expériences: statut théorique et implications managériales", *Décisions marketing*, vol. 28, no. octobre-décembre, pp. 13-22.

Fink, A. (2003). *The survey handbook*. Thousand Oaks, CA: Sage.

Fitzner, K., & Heckinger, E. (2010). Sample size calculation and power analysis: A quick review. *The Diabetes Educator, 36*(5), 701-707.

Flint, D. J. (2006). Innovation, symbolic interaction and customer valuing: Thoughts stemming from a service-dominant logic of marketing. *Marketing Theory, 6*(3), 349-362.

Folch-Lyon, E., & Trost, J. F. (1981). Conducting focus group sessions. *Studies in Family Planning, 12*(12), 443-449.

Fornell, C. (1992). A national customer satisfaction barometer: The Swedish experience. *Journal of Marketing, 56*(1), 6-21.

Fornell, C., & Larcker, D. F. (1981). Evaluating structural equation models with unobservable variables and measurement error. *Journal of Marketing Research, 18*(2), 39-50.

Fornell, C., Johnson, M. D., Anderson, E. W., Cha, J., & Bryant, B. E. (1996). The American customer satisfaction index: Nature, purpose, and findings. *Journal of Marketing, 60*(4), 7-18.

Fornerino, M., Helme-Guizon, A., & Gotteland, D. (2008). Movie consumption experience and immersion: Impact on satisfaction. *Recherche et Applications en Marketing (English Edition), 23*(3), 93-109.

Fornier, S. (1994). *A consumer-based relationship framework for strategic brand management*. Published PhD dissertation, University of Florida, Gainesville. FL.

Fullerton, G. (2003). When does commitment lead to loyalty? *Journal of Service Research, 5*(4), 333-344.

Fun, W. (1994). *Critical success factors of leisure industry--take example by Taiwan professional baseball.* Unpublished master disseration, National Taiwan University, Taipei, Taiwan.

Gale, B. T., & Wood, R. C. (1994). *Managing customer value: Creating quality and service that customers can see*. New York, NY: Free Press.

Gardener, H. (1985). *The mind's new science: a history of the cognitive revolution*. New York, NY: HarperCollins.

Garg, R., Rahman, Z., & Kumar, I. (2011). Customer experience: A critical literature review and research agenda. *International Journal of Services Sciences, 4*(2), 146-173.

Garg, R., Rahman, Z., Kumar, I., & Qureshi, M. (2011). Identifying and modelling the factors of customer experience towards customers' satisfaction. *International Journal of Modelling in Operations Management, 1*(4), 359-381.

Garg, R., Rahman, Z., Qureshi, M., & Kumar, I. (2012). Identifying and ranking critical success factors of customer experience in banks: An analytic hierarchy process (AHP) approach. *Journal of Modelling in Management, 7*(2), 201-220.

Gay, L. R. (1996). *Educational research: Competencies for analysis and application* (5th Eds.). Columbus, OH: Merrill Prentice Hall.

Gentile, C., Spiller, N., & Noci, G. (2007). How to sustain the customer experience: An overview of experience components that co-create value with the customer. *European Management Journal, 25*(5), 395-410.

Gerpott, T. J., Rams, W., & Schindler, A. (2001). Customer retention, loyalty, and satisfaction in the german mobile cellular telecommunications market. *Telecommunications Policy, 25*(4), 249-269.

Getz, D. (2005). *Event management and event tourism* (2nd Eds.), New Work, NY: Cognizant Communication.

Getz, D. (2008). Event tourism: Definition, evolution, and research. *Tourism Management, 29*(3), 403-428.

Getz, D., O'Neil, M. & Carlsen, J. (2001). Service quality evaluation at events through service mapping. *Journal of Travel Research, 39*(2), 380-390.

Gibson, H. J. (2005). Towards an understanding of 'why sport tourists do what they do'. *Sport in Society, 8*(2), 198-217.

Giese, L. & Cote, J. (2000). Defining Consumer Satisfaction. *Academy of Marketing Science Review, 2000*(1).

Gilly, M. C. (1987). Postcomplaint processes: From organisational response to repurchase behaviour. *Journal of Consumer Affairs, 21*(2), 293-311.

Girod, S. J. (2005). The human resource management practice of retail branding: An ethnography within oxfam trading division. *International Journal of Retail & Distribution Management, 33*(7), 514-530.

Gitter, S. R., & Rhoads, T. A. (2010). Determinants of minor league baseball attendance. *Journal of Sports Economics, 11*(6), 614-628.

Gladden, J. M. & Milne, G. R. (1999). Examining the importance of brand equity in professional sport. *Sport Marketing Quarterly, 8*(1), 21-29.

Gladden, J. M., & Funk, D. C. (2001). Understanding brand loyalty in professional sport: Examining the link between brand associations and brand loyalty. *International Journal of Sports Marketing & Sponsorship, 3*(2), 67-94.

Goldsmith, R. E., & Tsiotsou, R. H. (2012). Introduction to experiential marketing. In R. H. Tsiotsu, & R. E. Goldsmith (Eds.), *Strategic marketing in tourism services* (pp. 207-214). Bingley, UK: Emerald group phblishing Ltd.

Gordon, R. A. (1968). Issues in multiple regressions. *American Journal of Sociology, 73*(5), 592-616.

Gorsuch, R. L. (1983). *Factor analysis*. Hillsdale, NJ: Lawrence Erlbaum Associates.

Gounaris, S. P., Tzempelikos, N. A., & Chatzipanagiotou, K. (2007). The relationships of customer-perceived value, satisfaction, loyalty, and behavioural intentions. *Journal of Relationship Marketing, 6*(1), 63-87.

Greenstein, T. N. & Marcum, J. P. (1981). Factors affecting attendance of major league baseball: team performance. *Review of sport and leisure, 6*(2), 21-34.

Greenwell, T. C., Fink, J. S., & Pastore, D. L. (2002). Assessing the influence of the physical sports facility on customer satisfaction within the context of the service experience. *Sport Management Review, 5*(2), 129-148.

Grewal, D., Levy, M., & Kumar, V. (2009). Customer experience management in retailing: An organizing framework. *Journal of Retailing, 85*(1), 1-14.

Grix, J. (2002). Introducing students to the generic terminology of social research. *Politics, 22*(3), 175-186.

Grove, S. J., Fisk, R. P., & Bitner, M. J. (1992). Dramatizing the service experience: A managerial approach. In T. A. Swartz, D. E. Bowen & S. W. Brown (Eds.), *Advances in services marketing and management*, Vol1 (pp. 91-121). Greenwich, CT: JAI Press.

Grover, R., & Vriens, M. (2006). *The handbook of marketing research: Uses, misuses, and future advances.* Thousand Oaks, CA: Sage.

Grundey, D. (2008). Experiental marketing vs. traditional marketing: Creating rational and emotional liaisons with consumers. *The Romanian Economic Journal, Year XI,* (29), 133-151.

Gummesson, E. (1997). Relationship marketing as a paradigm shift: Some conclusions from the 30R approach. *Management Decision, 35*(4), 267-272.

Gupta, S., & Vajic, M. (2000). The contextual and dialectical nature of experiences. In F. J. A., & F. M. J. (Eds.), *New service developments: Creating memorable experiences* (pp. 33-51). Thousand Oaks, CA: Sage.

Guttmann, A. (1978). *From ritual to record: the nature of modern sports*, New York, NY: Columbia University Press.

Hackley, C., & Tiwsakul, R. (2006). Entertainment marketing and experiential consumption. *Journal of Marketing Communications, 12*(1), 63-75.

Hagedorn-Rasmussen, P., & Sundbo, J. (2008). The backstaging of experience production. In J. Sundbo, & P. Darmer (Eds.), *Creating experiences in the experience economy* (pp. 83-110). Cheltenham, UK: Edward Elgar.

Hair, J. F., Black, W. C., & Babin, B. J. (2010). *Multivariate data analysis: A global perspective* (7th Eds.). Upper Sdaddle River, NJ: Pearson.

Hallowell, R. (1996). The relationships of customer satisfaction, customer loyalty, and profitability: An empirical study. *International Journal of Service Industry Management, 7*(4), 27-42.

Hansen, H. & Gauthier, R. (1989). Factors affecting attendance at professional sport events, *Journal of Sport Management, 3*(1), 15-32.

Harlow, L. L. (1986). *Behaviour of some elliptical theory estimators with nonnormal data in a covariance structures framework: A Monte Carlo study*. Unpublish doctoral dissertation, University of California, Oakland, CA.

Harrell, G. D., Hutt, M. D., & Anderson, J. C. (1980). Path analysis of buyer behavior under conditions of crowding. *Journal of Marketing Research (JMR), 17*(1), 45-51.

Harris, K., Harris, R., & Baron, S. (2001). Customer participation in retail service: Lessons from Brecht. *International Journal of Retail & Distribution Management, 29*(8), 359-369.

Hatch, M. J., & Rubin, J. (2006). The hermeneutics of branding. *Journal of Brand Management, 14*(1), 40-59.

Hay, C. (2002). *Political analysis: A critical introduction*. UK, Basingstoke: Palgrave Macmillan.

Hayduk, L. A. (1988). *Structural equation modeling with LISREL: Essentials and advances*. Baltimore, MD: Johns Hopkins University Press.

Haytko, D. L., & Simmers, C. S. (2009). What's your preference? An exploratory examination of the effect of human vs ATM vs online interactions on overall consumer satisfaction with banking services. *Management Research News, 32*(4), 337-353.

Heere, B., & Dickson, G. (2008). Measuring attitudinal loyalty: Separating the terms of affective commitment and attitudinal loyalty. *Journal of Sport Management, 22*(2), 227-239.

Heidegger, M. (1973). Being and time (Macquarrie, J. & Robinson E. Trans.), Hoboken, NJ: Wiley-Blackwell.

Heinonen, K., Strandvik, T., Mickelsson, K., Edvardsson, B., Sundström, E., & Andersson, P. (2010). A customer-dominant logic of service. *Journal of Service Management, 21*(4), 531-548.

Helkkula, A. (2011). Characterising the concept of service experience. *Journal of Service Management, 22*(3), 367-389.

Herche, J. & Engelland, B. (1996). Reversed-polarity items and scale unidimensionality. *Journal of the academy of marketing science, 24*(4), 366-374.

Hetzel, P. (2002). *Planète conso: Marketing expérientiel et nouveaux univers de consummation*. Paris, French: Editions d'Organisation.

Heung, V. C. S., & Ngai, E. W. T. (2008). The mediating effects of perceived value and customer satisfaction on customer loyalty in the Chinese restaurant setting. *Journal of Quality Assurance in Hospitality & Tourism, 9*(2), 85-107.

Hill, B., & Green, B. C. (2000). Repeat attendance as a function of involvement, loyalty, and the sportscape across three football contexts. *Sport Management Review, 3*(2), 145-162.

Hill, N., & Alexander, J. (2000). *Handbook of customer satisfaction and loyalty measurement*, Burlington, VT: Gower Publishing.

Hoch, S. J., & Deighton, J. (1989). Managing what consumers learn from experience. *The Journal of Marketing, 53*(2), 1-20.

Hoch, S. J., & Ha, Y. W. (1986). Consumer learning: Advertising and the ambiguity of product experience. *Journal of Consumer Research, 13*(2), 221-233.

Hoelter, J. W. (1983). The analysis of covariance structures goodness-of-fit indices. *Sociological Methods & Research, 11*(3), 325-344.

Holbrook, M. B. (1997). Romanticism, introspectioin and the roots of experiential consumption: Morris the epicurean, *Consumption, Market and Culture, 1*(2), 97-164.

Holbrook, M. B. (2000). The millennial consumer in the texts of our times: Experience and entertainment. *Journal of Macromarketing, 20*(2), 178-192.

Holbrook, M. B., & Hirschman, E. C. (1982). The experiential aspects of consumption: Consumer fantasies, feelings, and fun. *Journal of Consumer Research, 9*(2), 132-140.

Homburg, C., & Giering, A. (1999). Messung von markenzufriedenheit und markenloyalität [the measurement of brand satisfaction and brand loyalty]. In F. R. Esch (Eds.), *Moderne markenführung: Grundlagen—innovative Ansätze—praktische umsetzungen [modern brand*

management: Fundamentals, new approaches, implementations] (pp. 1089-1100). Wiesbaden, Germany: Gabler.

Horng, S. C. & Sun, K. N. (2009, November). The effect of Taiwan professional baseball's sales promotion strategy with qualitative study. *The 8th Annual Academic Conference: New paradigms of management*, Taipei, Taiwan. Article retrieved from http://ir.lib.ntust.edu.tw/handle/987654321/13711.

Hosany, S., & Witham, M. (2010). Dimensions of cruisers' experiences, satisfaction, and intention to recommend. *Journal of Travel Research, 49*(3), 351-364.

Howard, D. R., & Crompton, J. L. (2004). Tactics used by sports organisations in the United States to increase ticket sales. *Managing Leisure, 9* (2), 87-95.

Howard, J. A., & Sheth, J. N. (1969). *The theory of buyer behaviour*. New York, NY: Wiley.

Howat, G., Absher, J., Crilley, G., & Milne, I. (1996). Measuring customer service quality in sports and leisure centres. *Managing Leisure, 1*(2), 77-89.

Hsiao, Y. L., Hsu, C. M., Wu, M. L., Chien, Y. H., Chang, Y. L., Hsu, Y. C., et al. (2011). *Discussion of the relationship between experiential marketingn, satisfaction, and loyalty: A case study of SBL.* Unpublished Undergraduate dissertation, Lunghwa University of Science and Technology, Taoyuan, Taiwan.

Hsieh, C. W. (2007). Educational research paradigm of future: The introduction of mixed methodology. *Journal of National Pingtung University of Education, 23*, 176-194.

Hsu, W. C. (2000). *Post-occupancy evaluation on the Taiwan county baseball field: Referring to the public usage.* Unpublished master disseration, Chung Hua University, Hsinchu, Taiwan.

Hu, H., Kandampully, J., & Juwaheer, T. D. (2009). Relationships and impacts of service quality, perceived value, customer satisfaction, and image: An empirical study. *The Service Industries Journal, 29*(2), 111-125.

Hu, L., & Bentler, P. M. (1995). Evaluating model fit. In R. H. Hoyle (Eds.), *Structural equation modeling: Concepts, issues, and applications* (pp. 76-99). Thousand Oaks, CA: Sage.

Hu, L., & Bentler, P. M. (1999). Cutoff criteria for fit indexes in covariance structure analysis: Conventional criteria versus new alternatives. *Structural Equation Modeling: A Multidisciplinary Journal, 6*(1), 1-55.

Huang, C. W. (2003). *A study on the environmental management of the theme parks and their practices in Taiwan.* Unpublished master disseration, Nan-hua University, Chiayi, Taiwan.

Hui, M. K., & Bateson, J. E. G. (1991). Perceived control and the effects of crowding and consumer choice on the service experience. *Journal of Consumer Research, 18*(2), 174-184.

Hung, S. H. (2003). *A study on spectators' repurchased intension of the Chinese Professional Baseball League.* Unpublished master disseration, National Taiwan Normal University, Taipei, Taiwan.

Hunt, K. A., Bristol, T. & Bashaw, R. E. (1999). A conceptual approach to classifying sports fans. *Journal of Services Marketing*, 13(6), 439-452.

Izard, C. E. (1977). *Human emotions*. Camridge, MA: Plenum.

Jacoby, J., & Chestnut, R. W. (1978). *Brand loyalty: Measurement and management*. New York, NY: Wiley.

Jacoby, J., & Kyner, D. B. (1973). Brand loyalty vs. repeat purchasing behavior. *Journal of Marketing Research, 10*(1), 1-9.

Jamal, A. & Naser, K. (2003). Factors influencing customer satisfaction in the retail banking sector in Pakistan. *Internatioinal Journal of Commerce and Management, 13*(2), 29.

James, W. (1961). *The varieties of religious experience: A study of human nature*. New York, NY: Collier.

Javadein, S. R., Khanlari, A. & Estiri, M. (2008). Customer loyalty in the sport services industry: the role of service quality, customer satisfaction, commitment and trust. *International Journal of Human Sciences, 5*(2), 1-19.

Johnson M., Jocumsen, G., & West, K. (2004). *Experiential consumption behaviour in sport: A suggested methodology*. Proceedings of the 2004 Australian and New Zealand Marketing Academy Conference (ANZMAC 2004), 1-7.

Johnson, M. D., Herrmann, A., & Gustafsson, A. (2002). Comparing customer satisfaction across industries and countries. *Journal of Economic Psychology, 23*(6), 749-769.

Johnson, R. B., & Onwuegbuzie, A. J. (2004). Mixed methods research: A research paradigm whose time has come. *Educational Researcher, 33*(7), 14-26.

Jöreskog, K. G., & Sörbom, D. (1989). *Lisrel 7 user's reference guide*. Mooresville, Chicago: Scientific Software International.

Jöreskog, K. G., & Sörbom, D. (1992). *LISREL 8 user's reference guide*. Mooresville, Chicago: Scientific Software International.

Kaiser, H. F. (1970). A second generation little jiffy. *Psychometrika, 35*(4), 401-415.

Kaiser, H. F., & Rice, J. (1974). Little Jiffy, Mark Iv. *Educational and Psychological Measurement, 34*(1), 111-117.

Kao, Y. F., Huang, L. S., & Yang, M. H. (2007). Effects of experiential elements on experiential satisfaction and loyalty intentions: A case study of the super basketball league in Taiwan. *International Journal of Revenue Management, 1*(1), 79-96.

Kaplanidou, K., & Vogt, C. (2010). The meaning and measurement of a sport event experience among active sport tourists. *Journal of Sport Management, 24*(5), 544-566.

Keillor, B. D., Lewison, D., Hult, G. T. M., & Hauser, W. (2007). The service encounter in a multi-national context. *Journal of Services Marketing, 21*(6), 451-461.

Keiningham, T. L., Cooil, B., Aksoy, L., Andreassen, T. W., & Weiner, J. (2007). The value of different customer satisfaction and loyalty metrics in predicting customer retention, recommendation, and share-of-wallet. *Managing Service Quality, 17*(4), 361-384.

Keller, K. L. (1993). Conceptualizing, measuring, and managing customer-based brand equity. *Journal of Marketing, 57*, 1-22.

Keller, K. L. (2003). Brand synthesis: The multidimensionality of brand knowledge. *Journal of consumer research, 29,* 595-600.

Keller, K. L., & Lehmann, D. r. (2006). Brands and branding: Research findings and future priorities. *Marketing Science, 25*(6), 740-759.

Kelly, B. (2007). Methodological issues for qualitative research with learning disabled children. *International Journal of Social Research Methodology, 10*(1), 21-35.

Kelly, S. W. & Turley, L. W. (2001). Consumer perceptions of service quality attributes at sporting events, *Journal of Business Research, 54*(2), 161-166.

Kempf, D. A. S., & Smith, R. E. (1998). Consumer processing of product trial and the influence of prior advertising: A structural modeling approach. *Journal of Marketing Research, 35*(3), 325-338.

Kerin, R. A., Jain, A., & Howard, D. J. (1992). Store shopping experience and consumer price-quality-value perceptions. *Journal of Retailing, 68*, 376-376.

Kim, S., Cha, J., Knutson, B. J., & Beck, J. A. (2011). Development and testing of the consumer experience index (CEI). *Managing Service Quality, 21*(2), 112-132.

Kim, W. G., Ng, C. Y. N., & Kim, Y. (2009). Influence of institutional DINESERV on customer satisfaction, return intention, and word-of-mouth. *International Journal of Hospitality Management, 28*(1), 10-17.

Kitzinger, J. (1995). Qualitative research. Introducing focus groups. *British Medical Journal, 311*, 299-311.

Klaus, P. (2007). *A systematic review of measurements of service quality and consumer experience.* Unpublished doctoral dissertation, Cranfield University, Cranfield, UK.

Kline, R. B. (1998). *Principles and practice of structural equation modeling* (3rd Eds.). New York, NY: Guilford Publications.

Ko, Y. J. & Pastore, D. L. (2004). Current issues and conceptualizations of service quality in the recreational sport industry, *Sport Marketing Quarterly, 13*(3), 159-167.

Ko, Y. J., Zhang, J., Cattani, K., & Pastore, D. (2011). Assessment of event quality in major spectator sports. *Managing Service Quality, 21*(3), 304-322.

Koenig-Lewis, N., & Palmer, A. (2008). Experiential values over time–a comparison of measures of satisfaction and emotion. *Journal of Marketing Management, 24*(1), 69-85.

Koo, G. Y., Hardin, R., McClung, S., Jung, T., Cronin Jr., J. J., Vorhees, C., et al. (2009). Examination of the causal effects between the dimensions of service quality and spectator satisfaction in minor league baseball. *International Journal of Sports Marketing and Sponsorship, 11*(1), 46-59.

Kotler, P. (2003). *Marketing management* (11th Eds.). Columbus, OH: Merrill Prentice Hall.

Kouthouris, C., & Alexandris, K. (2005). Can service quality predict customer satisfaction and behavioural intentions in the sport tourism industry? An application of the SERVQUAL model in an outdoors setting. *Journal of Sport & Tourism, 10*(2), 101-111.

Krejcie, R. V., & Morgan, D. W. (1970). Determining sample size for research activities. *Educ Psychol Meas, 30*(3), 607-610.

Krueger, R. A., & Casey, M. A. (2000). *Focus groups: A practical guide for applied research.* Thousand Oaks, CA: Sage.

Kruger, M., & Saayman, M. (2012). Creating a memorable spectator experience at the two oceans marathon. *Journal of Sport & Tourism, 17*(1), 63-77.

Kruger, R. M. (2001). Sans sears, Avon & JCPenney launch beComing. *Retail Merchandiser, 41*(9), 11.

Kuo, C. D., Cheng, W. T., & Lin, S. Y. (2004). A study of the chinese professional baseball league fans' lifestyle to viewing behaviour－An example of the northern taiwan area. *TAMSUI OXFORD Journal of Sports Knowledge,* (1), 47-67.

Kuo, N., Chang, K., Cheng, Y., & Lai, C. (2011). *The impact of service quality, customer satisfaction and loyalty in the restaurant industry: Moderating effect of perceived value.*

Quality and Reliability (ICQR), Proceedings of 2011 IEEE International Conference, 551-555.

Kwon, H. H., Trail, G. T., & Anderson, D. F. (2005). Are multiple points of attachment necessary to predict cognitive, affect, conative, or behavioural loyalty? *Sport Management Review, 8*, 255-270.

Lakoff, G. (1987). *Women, fire, and dangerous things: what categories reveal about the mind*. Chicago, IL: The university of Chicago press.

Langeard, D., Bteson, J. E. G., Lovelock, C. H., & Eiglier, E. (1981). *Marketing of services: New insights from consumers and management*. (No. 81-104). Cambridge, MA: Marketing Sciences Institute.

Lanier Jr., C. D. (2008). *Experiential marketing: Exploring the dimensions, characteristics.* Unpublished doctoral dissertation, University of Nebraska, Lincoln, NE.

LaSalle, D., & Britton, T. A. (2002). *Priceless: Turning ordinary products into extraordinary experiences*. Boston, MA: Harvard Business Press.

Laverie, D. A., & Arnett, D. B. (2000). Factors affecting fan attendance: The influence of identity salience and satisfaction. *Journal of Leisure Research, 32*(2), 225-246.

Lawson, T. (1994). A realist theory for economics. In R. Backhouse (Eds.), *New directions in economic methodology* (pp. 257-284). London: Routledge.

Layder, D. (1990). *The realist image in social science*. London, UK: Macmillan.

Lazarus, R. S. (1991). *Emotion and adaptation.* New York, NY: Oxford University Press.

Lee, J. H., Kim, H. D., Ko, Y. J. & Sagas, M. (2010). The influence of service quality on satisfaction and intention: A gender segmentation stragtegy. *Sport Management Review, 14*(1), 54-63.

Lee, J., Graefe, A. R., & Burns, R. C. (2004). Structural analysis of service quality, satisfaction, and behavioral intention among forest visitors. *Journal of Travel & Tourism Marketing, 17*(1), 73-82.

Lee, J., Graefe, A. R., & Burns, R. C. (2007). Examining the antecedents of destination loyalty in a forest setting. *Leisure Sciences, 29*(5), 463-481.

Lee, J., Kim, H., Ko, Y. J., & Sagas, M. (2011). The influence of service quality on satisfaction and intention: A gender segmentation strategy. *Sport Management Review, 14*(1), 54-63.

Lee, M. S., Hsiao, H. D., & Yang, M. F. (2010). The study of the relationships among experiential marketing, service quality, customer satisfaction and customer loyalty. *International Journal of Organizational Innovation, Thailand. , 3*(2) 353-379.

Lee, T. H. (2009). A structural model to examine how destination image, attitude, and motivation affect the future behavior of tourists. *Leisure Sciences, 31*(3), 215-236.

Lee, T. H., & Chang, Y. S. (2012). The influence of experiential marketing and activity involvement on the loyalty intentions of wine tourists in Taiwan. *Leisure Studies, 31*(1), 103-121.

Lee, Y. J. (2004). *The influence of fans" baseball team identification on satisfaction and loyalty.* Unpublished masterdissertation, Soochow University, Taipei, Taiwan.

Lee, Y. K., Park, K. H., Park, D. H., & Kwon, Y. J. (2005). The relative impact of service quality on service value, customer satisfaction, and customer loyalty in Korean family restaurant context. *Journal of Hospitality and Tourism Administration, 6*(1), 27-51.

Leeflang, P. (2011). Paving the way for “distinguished marketing”. *International Journal of Research in Marketing, 28*(2), 76-88.

Lemke, R. J., Leonard, M., & Tlhokwane, K. (2010). Estimating attendance at major league baseball games for the 2007 season. *Journal of Sports Economics, 11*(3), 316-348.

Lenka, U., Suar, D., & Mohapatra, P. K. J. (2009). Service quality, customer satisfaction, and customer loyalty in Indian commercial banks. *Journal of Entrepreneurship, 18*(1), 47-64.

Levy, P. S., Lemeshow, S., Hade, E. M., & Ferketich, A. K. (1999). *Sampling of populations: Methods and applications.* New York, NY: Wiley.

Lewis, R. C., & Chambers, R. E. (2000). *Marketing leadership in hospitality: Foundations and practices*. New York: John Wiley.

Li, Y. J. (2004). *The influence of fan's baseball team identification on satisfaction and loyalty.* Unpublished master dissertation, Soochow University, Taipei, Taiwan.

Liao, C. J. (2004). *A study of the effect of the professional baseball game spectators' consumption experience element toward experience satisfaction and loyalty intention*. Unpublished PhD dissertation, National Taiwan Normal Univeristy, Taipei, Taiwan.

Liao, L. Y. (2011). *Studying the relationship among the experiential value, satisfaction, and loyalty: A case study of IKEA*. Unpublished master dissertation, National Suan Yat-sen University, Kaohsiung, Taiwan.

Liao, S. F. (2009). *A study of the relationships among the involvement, team identification, fan loyalty: For Chinese professional baseball leaguage spectators*. Unpublished master disseration, National Taiwan Sport University, Taoyuan, Taiwan.

Liao, Y. T. (2008). *The 3-stage model of experiential marketing: Case studies of commercial hotels in Taipei.* Unpublished master dissertation, Shih Hsin University, Taipei, Taiwan.

Liddy, A. (2000). Relationship marketing, loyalty programmes and the measurement of loyalty. *Jornal of Targeting Measurement and Analysis for Marketing, 8*(4), 351-362.

Liljander, V., & Strandvik, T. (1997). Emotions in service satisfaction. *International Journal of Service Industry Management, 8*(2), 148-169.

Lin, C. W. (2012). *Professional sports and city space – The case of Taoyuan and Lamigo Monkeys*. Unpublished master dissertation, National Taiwan Sport University, Taoyuan, Taiwan.

Lin, C. Y. (1995). *A study on consumer behaviour of Brother Elephants professional baseball club.* Unpublished master dissertation, National Taiwan Normal University, Taipei, Taiwan.

Lin, J. W. (2007). *A study of the effect of the super basketball league spectators' consumption experience quality toward expeirnce, satisfaction, and loyalty intention.* Unpublished master dissertation, National Chung Cheng University, Chia Yi, Taiwan.

Lincoln, Y. S., & Guba, E. G. (1985). *Naturalistic inquiry*. Thousand Oaks, CA: Sage.

Little, T. D. (1997). Mean and covariance structures (MACS) analyses of cross-cultural data: Practical and theoretical issues. *Multivariate Behavioural Research, 32*(1), 53-76.

Liu, J. G. (2010). *A study on Chinese Professional Baseball League spectators' expectation and satisfaction with the baseball field facilities.* Unpublished master dissertation, National Taiwan Normal University, Taipei, Taiwan.

Liu, M. C. (1998). *A study of consumer behaviour in professional baseball in Taiwan.* Unpublished master dissertation, National Cheng Chi University, Taipei, Taiwan.

Liu, T. C., & Wu, L. W. (2007). Customer retention and cross-buying in the banking industry: An integration of service attributes satisfaction and trust. *Journal of Financial Services Marketing, 12*(2), 132-145.

Liu, Y., & Jang, S. C. S. (2009). Perceptions of Chinese restaurants in the US: What affects customer satisfaction and behavioral intentions? *International Journal of Hospitality Management, 28(*3), 338-348.

López, J. (2003). Critical realism: The difference that it makes, in theory. In J. Cruickshank (Eds.), *Critical Realism: The difference that it makes* (pp. 75-89). London, UK: Routledge.

Lowe, S., Carr, A. N., Thomas, M., & Watkins-Mathys, L. (2005). The fourth hermeneutic in marketing theory. *Marketing Theory, 5*(2), 185-203.

Lu, W. C. (2007). *A study on spectators' participation behaviour intention model in Chinese Professional Baseball League.* Unpublished doctoral dissertation, National Taiwan Normal University, Taipei, Taiwan.

Lundberg, H. (2007). Sport as enterainment: A case of kitsch in the experience economy. In D. Hjorth, & M. Kostera (Eds.), *Entrepreneurship and experience economy* (pp. 181-206). Copenhagen, Denmark: Copenhagen Business School Press.

MacAloon, J. (1984). Olympic Games and the theory of spectacle in modern societies. In MacAloon (Eds.), *Rite, drama, festival, spectacle. Rehearsals toward a theory of cultural performance* (pp. 241-280). Philadelphia, PA: Institute for the study of human issues.

MacCallum, R. C., & Hong, S. (1997). Power analysis in covariance structure modeling using GFI and AGFI. *Multivariate Behavioural Research, 32*(2), 193-210.

MacCallum, R. C., Browne, M. W., & Sugawara, H. M. (1996). Power analysis and determination of sample size for covariance structure modeling. *Psychological Methods, 1*(2), 130.

MacInnis, D. J., & Folkes, V. S. (2010). The disciplinary status of consumer behavior: A sociology of science perspective on key controversies. *Journal of Consumer Research, 36*(6), 899-914.

Mackay, N. (1997). Constructivism and the logic of explanation. *Journal of Constructivist Psychology, 10* (4), 339-361.

Madrigal, R. (1995). Cognitive and affective determinants of fan satisfaction with sporting event attendance. *Journal of Leisure Research, 27*(3), 205-227.

Mahony, D. F., Madrigal, R. & Howard, D. (2000). Using the psychological commitment to team (PCT) scale to segment sport consumers based on loyalty. *Sport Marketing Quarterly, 9*(1), 15-25.

Mallard, A. G. C., & Lance, C. E. (1998). Development and evaluation of a parent-employee interrole conflict scale. *Social Indicators Research, 45*(1), 343-370.

Manicas, P. (1987). *A history and philosophy of the social sciences.* Oxford, UK: Blackwell.

Mano, H., & Oliver, R. L. (1993). Assessing the dimensionality and structure of the consumption experience: evaluation, feeling, and satisfaction. *Journal of Consumer Research*, *20*(3), 451-466.

Mardia, K. V. (1985). Mardia's test of multinormality. *Encyclopedia of Statistical Sciences, 5*, 217-221.

Mardia, K. V., & Foster, K. (1983). Omnibus tests of multinormality based on skewness and kurtosis. *Communications in Statistics-Theory and Methods, 12*(2), 207-221.

Markham, I. S., & Rakes, T. R. (1998). The effect of sample size and variability of data on the comparative performance of artificial neural networks and regression. *Computers & Operations Research, 25*(4), 251-263.

Marsh, H. W., & Hocevar, D. (1985). Application of confirmatory factor analysis to the study of self-concept: First-and higher order factor models and their invariance across groups. *Psychological Bulletin, 97*(3), 562-582.

Martinez, J. A., Ko, Y. J., & Martinez, L. (2010). An application of fuzzy logic to service quality research: A case of fitness service. *Journal of Sport Management, 24*(5), 502-523.

Mascarenhas, O. A., Kesavan, R., & Bernacchi, M. (2006). Lasting customer loyalty: A total customer experience approach. *Journal of Consumer Marketing, 23*(7), 397-405.

Maslow, A. H. (1976). *Religions, values, and peak-experiences*. Columbus: Ohio State University Press.

McDougall, G. H., & Levesque, T. (2000). Customer satisfaction with services: Putting perceived value into the equation. *Journal of Services Marketing, 14*(5), 392-410.

McDowall, S. (2010). A comparison between Thai residents and non-residents in their motivations, performance evaluations, and overall satisfaction with a domestic festival. *Journal of Vacation Marketing, 16*(3), 217-233.

McLellan, H. (2000). Experience design. *Cyberpsychology and Behavior, 3*(1), 59-69.

Meyer, C., & Schwager, A. (2007). Understanding customer experience. *Harvard Business Review, 85*(2), 116.

Micceri, T. (1989). The unicorn, the normal curve, and other improbable creatures. *Psychological Bulletin, 105*(1), 156-166.

Milton, S. (1986). A sample size formula for multiple regression studies. *Public Opinion Quarterly, 50*(1), 112-118.

Ministry of the Interior of Taiwan. (2012, January, 01). *Statistical yearbook of interior*. [Official documents] Retrieved October 25, 2012, from the World Wide Web: http://sowf.moi.gov.tw/stat/year/elist.htm

Mishra, A. A. (2009). A study on customer satisfaction in Indian retail banking. *IUP Journal of Management Research, 8*(11), 45-61.

Mittal, V., & Kamakura, W. A. (2001). Satisfaction, repurchase intent, and repurchase behaviour: Investigating the moderating effect of customer characteristics. *Journal of Marketing Research, 38*(1), 131-142.

Montonen, H., & Tanski, M. B. (2004). *The factory experience: Experience marketing to the end consumer*. Unpublished master dissertation, Göteborg University, Göteborg, Sweden.

Morgan, D. L. (1997). *Focus groups as qualitative research*, London, UK: Sage.

Morgan, J., Jocumsen, M., & West, G. (2004, Nov.). *Experiential consumption behaviour in sport: a suggested methodology*. Paper presented at ANZMAC, Wellington, New Zealand. Article retrieved from http://eprints.usq.edu.au/6982/.

Morse, J. M. (2000). Determining sample size. *Qualitative Health Research, 10*(1), 3-5.

Murphy, K. R., Myors, B. & Wolach, A. (2009). *Statistical power analysis: A simple and general model for traditional and modern hypothesis tests*. New York, NY: Routledge.

Narayandas, D. (2005). Building loyalty in business markets. *Harvard Business Review, 83*(9), 131-139.

Neale, L., & Funk, D. (2006). Investigating motivation, attitudinal loyalty, and attendance behaviour with fans of Australian football. *International Journal of Sports Marketing & Sponsorship, 7*(4), 307-319.

Nevill, A. M. & Holder, R. L. (1999). Home advantage in sport. *Sport Medicine, 28*(4), 221-236.

Oliver, R. L. (1980). A cognitive model of the antecedents and consequences of satisfaction decisions. *Journal of Marketing Research, 17*(4), 460-469.

Oliver, R. L. (1981). Measurement and evaluation of satisfaction processes in retail settings. *Journal of Retailing, 57*(3), 25-48.

Oliver, R. L. (1993). Cognitive, affective, and attribute bases of the satisfaction response. *Journal of Consumer Research, 20*(December), 418-430.

Oliver, R. L. (1997). *Satisfaction: A behavioural perspective on the customer*. Armonk, New York: M. E. Sharpe.

Oliver, R. L. (1999). Whence consumer loyalty? *The Journal of Marketing, 63*, 33-44.

Oliver, R. L., & Swan, J. E. (1989a). Consumer perceptions of interpersonal equity and satisfaction in transactions: A field survey approach. *The Journal of Marketing, 53*(2), 21-35.

Oliver, R. L., & Swan, J. E. (1989b). Equity and disconfirmation perceptions as influences on merchant and product satisfaction. *Journal of Consumer Research, 16*(3), 372-383.

Olorunniwo, F., Hsu, M. K., & Udo, G. J. (2006). Service quality, customer satisfaction, and behavioral intentions in the service factory. *Journal of Services Marketing, 20*(1), 59-72.

O'Sullivan, E. L., & Spangler, K. J. (1998). *Experience marketing: Strategies for the new millennium.* State College, PA: Venture.

Outhwaite, W., Bottomore, T. B., Gellner, E., Nisbet, R. A., & Touraine, A. (1993). *The blackwell dictionary of twentieth-century social thought*, Hoboken, NJ: Wiley-Blackwell.

Palmer, A. (2010). Customer experience management: A critical review of an emerging idea. *Journal of Services Marketing, 24*(3), 196-208.

Pantouvakis, A., & Lymperopoulos, K. (2008). Customer satisfaction and loyalty in the eyes of new and repeat customers: Evidence from the transport sector. *Managing Service Quality, 18*(6), 623-643.

Parasuraman, A., Zeithaml, V. A. & Berry, L. L. (1988). SERVQUAL: a multiple-item scale for measuring consumer perceptions of service quality, *Journal of Retailing, 64*(1), 12-40.

Parasuraman, A., Zeithaml, V. A., & Berry, L. L. (1985). A conceptual model of service quality and its implications for future research. *The Journal of Marketing, 49*(4), 41-50.

Parker, K., & Stuart, T. (1997). Best presentation award the west ham syndrome. *Journal-Market Research Society, 39*, 509-518.

Patterson, P. G., & Spreng, R. A. (1997). Modelling the relationship between perceived value, satisfaction and repurchase intentions in a business-to-business, services context: An empirical examination. *International Journal of Service Industry Management, 8*(5), 414-434.

Pease, D., & Zhang, J. (2001). Socio-motivational factors affecting spectator attendance at professional basketball games. *International Journal of Sport Management, 2*(1), 31-59.

Peng, T., Kao, Y., & Lin, C. C. (2006). Common method variance in management research: Its nature, effects, detection, and remedies. *Journal of Management, 23*(1), 77-98.

Pepper, S. C. (1942). *World hypotheses: A study in evidence*. Los Angeles, CA: Univ of California Press.

Pine, B. J., & Gilmore, J. H. (1999). *The experience economy: Work is theatre & every business a stage*. Boston, MA: Harvard Business Press.

Pine, B. J., & Gilmore, J. H. (1999). The experience economy: work is theatre & every business a stage. Boston, MA: Harvard Business Press.

Podsakoff, P. M., & Organ, D. W. (1986). Self-reports in organisational research: Problems and prospects. *Journal of Management, 12*(4), 531-544.

Podsakoff, P. M., MacKenzie, S. B., Lee, J. Y., & Podsakoff, N. P. (2003). Common method biases in behavioural research: A critical review of the literature and recommended remedies. *Journal of Applied Psychology, 88*(5), 879-903.

Pollack, B. L. (2009). Linking the hierarchical service quality model to customer satisfaction and loyalty. *Journal of Services Marketing, 23*(1), 42-50.

Pont, M., & McQuilken, L. (2005). An empirical investigation of customer satisfaction and loyalty across two divergent bank segments. *Journal of Financial Services Marketing, 9*(4), 344-359.

Poulsson, S. H. G., & Kale, S. H. (2004). The experience economy and commercial experiences. *The Marketing Review, 4*(3), 267-277.

Prahalad, C. K., & Ramaswamy, V. (2004). Co-creating unique value with customers. *Strategy & Leadership, 32*(3), 4-9.

Prawat, R. S. (1995). Misreading Dewey: reform, projects and the language game. *Educational researcher, 24* (10), 13-22.

Prenshaw, P. J., Kovar, S. E., & Burke, K. G. (2006). The impact of involvement on satisfaction for new, nontraditional, credence-based service offerings. *Journal of Services Marketing, 20*(7), 439-452.

Price, L. L., Arnould, E. J., & Tierney, P. (1995). Going to extremes: Managing service encounters and assessing provider performance. *The Journal of Marketing, 59*(2), 83-97.

Rahardja, C., & Anandya, D. (2010). *Experiential marketing, customer satisfaction, and behavioural intention: Timezone game center Surabaya*. Proceedings of the First International Conference Business and Economics, Omoku, Nigeria. , April, 2010(1) 1-6.

Ranaweera, C., & Prabhu, J. (2003). On the relative importance of customer satisfaction and trust as determinants of customer retention and positive word of mouth. *Journal of Targeting Measurement and Analysis for Marketing, 12*(1), 82-90.

Raphel, M., & Raphel, N. (1995). *Up the loyalty ladder: Turning sometime customers into full-time advocates of your business.* New York, NY: Harper Business.

Raykov, T. & Marcoulides, G. A. (2000). *A first course in structural equation modeling*. Mahwah, NJ: Lawrence Erlbaum.

Real, M. R. (1975). Super bowl: Mythic spectacle. *Journal of communication, 25*(Winter), 31-43.

Reber, A. S. (1995). *The penguin dictionary of psychology*. New York, NY: Penguin.

Reynolds, K. E., & Arnold, M. J. (2000). Customer loyalty to the salesperson and the store: Examining relationship customers in an upscale retail context. *Journal of Personal Selling & Sales Management, 20*(2), 89-98.

Richards, G. (2001). The experience industry and the creation of attractions. In G. Richards (Eds.), *Cultural attractions and European tourism* (pp. 55-69). Oxon, UK: CABI.

Richelieu, A., & Desbordes, M. (2009). Football teams going international: A matter of brand positioning. *Journal of Sponsorship, 3*(1), 10-22.

Richins, M. L. (1997). Measuring emotions in the consumption experience. *Journal of Consumer Research, 24*(2), 127-146.

Rifkin, J. (2000). *The age of access. The new culture of hypercapitalism where all of life is paid-for experience*. New York, NY: Putnam.

Ritzer, G. (1999). *Enchanting a disenchanted world: Revolutionizing the means of consumption*. Thousand Oaks, CA: Pine Forge Press.

Roberts, K. A. (1984). *Religion in sociological perspective.* Homewood, IL: Dorsey.

Rust, R. T., & Oliver, R. L. (1994). Insights and managerial implications from the frontier. In R. T. Rust, & R. L. Oliver (Eds.), *Service quality: New directions in theory and practice* (pp. 1-19). Thousand Oaks, CA: Sage.

Rust, R. T., & Zahorik, A. J. (1993). Customer satisfaction, customer retention, and market share. *Journal of Retailing, 69*(2), 193-215.

Ryan, A., Tähtinen, J., Vanharanta, M., & Mainela, T. (2009). Putting critical realism to work in business relationship research. Paper presented and published at the meeting of *25th Annual Industrial Marketing and Purchasing Group (IMP) Conference,* Marseille, France.

Same, S., & Larimo, J. (2012, May). *Marketing theory: Experience marketing and experiential marketing.* Paper presented at the 7th International Scientific Conference. Vilnius, Lithuania. Abstract retrieved from http://leidykla.vgtu.lt/conferences/BM_2012/international_economy/480_487_Same.pdf

Santoro, C., & Troilo, G. (2007). The drivers of hedonic consumption experience: A semiotic analysis of rock concerts. In Antonella Caru, & Bernard Cova (Eds.), *Consuming experience* (pp. 109-125). London, UK: Routledge.

Sayer, A. (1992). *Method in social science: A realist approach*. London, UK: Routledge.

Scheaffer, R. L., Mendenhall III, W., Ott, R. L., & Gerow, K. G. (2011). *Elementary survey sampling*, Pacific Grove, CA: Duxbury Press.

Schembri, S. (2006). Rationalizing service logic, or understanding services as experience? *Marketing Theory, 6*(3), 381-392.

Schembri, S., & Sandberg, J. (2011). The experiential meaning of service quality. *Marketing Theory, 11*(2), 165-186.

Schijns, J. (2003). *Loyalty and satisfaction in physical and remote service encounters*. Proceedings of the DMEF Educator's Conference, pp.12-2003.

Schmitt, B. (1999). Experiential marketing. *Journal of Marketing Management, 15*(1-3), 53-67.

Schmitt, B. (2008). A framework for managing customer experiences. In B. H. Schmitt, & D. L. Rogers (Eds.), *Handbook on brand and experience management* (pp. 113-131). Northampton, UK: Edward Elgar.

Schmitt, B. (2011). *Experience marketing: Concepts, frameworks and consumer insights*, Hanover, MA: Now Publishers.

Schmitt, B. H. (1999). *Experiential marketing: How to get customers to sense, feel, think, act, and relate to your company and brands*. New York, NY: Simno & Schuster.

Schmitt, B. H. (2003). *Customer experience management: A revolutionary approach to connecting with your customers.* New York, NY: John Wiley & Sons Inc.

Schmitt, B., & Rogers, D. L. (2008). *Handbook on brand and experience management*. Cheltenham, UK: Edward Elgar.

Schneider, B., White, S. S., & Paul, M. C. (1998). Linking service climate and customer perceptions of service quality: Tests of a causal model. *Journal of Applied Psychology, 83*(2), 150.

Schoemann, A. M., Preacher, K. J., & Coffman, D. L. (2010, April). Plotting power curves for RMSEA [Computer software]. Available from http://quantpsy.org/.

Schouten, J. W., & McAlexander, J. H. (1995). Subcultures of consumption: An Ethnography of the new bikers. *Journal of Consumer Research, 22*(1), 43-61.

Schouten, J. W., McAlexander, J. H., & Koenig, H. F. (2007). Transcendent customer experience and brand community. *Journal of the Academy of Marketing Science, 35*(3), 357-368.

Schuh, K. L. & Barab, S. A. (2008). Philosophical perspectives. In Spector et al., (Eds.), *Handbook of research on educational communications and tecnology* (pp. 67-82). New York, NY: Lawrence Erlbaum associates.

Schumacker, R. E., & Lomax, R. G. (2004). *A beginner's guide to structural equation modeling* (2nd ed.). Hillsdale, NJ: Lawrence Erlbaum Associates.

Scitovsky, T. (1976). *The joyless economy: An inquiry into human satisfaction and dissatisfaction*. Oxford, UK: Oxford University Press.

Scott, J. W. (1991). The evidence of experience. *Critical Inquiry, 17*(4), 773-797.

Shankar, V., Smith, A. K., & Rangaswamy, A. (2003). Customer satisfaction and loyalty in online and offline environments. *International Journal of Research in Marketing, 20*(2), 153-175.

Shao, G., & Liang, J. (2010, Auguest). *An analysis on the effect of supermarket experiential marketing impacting customer loyalty*. 2010 Conference on International Marketing Science and Management Technology, Shaoxing, China. 256-262.

Shaw, C. (2007). *The DNA of customer experience: How emotions drive value*. Basingstoke, UK: Palgrave Macmillan.

Sheu, J., Su, Y., & Chu, K. (2009). Segmenting online game customers–The perspective of experiential marketing. *Expert Systems with Applications, 36*(4), 8487-8495.

Shoemaker, S., & Lewis, R. C. (1999). Customer loyalty: The future of hospitality marketing. *International Journal of Hospitality Management, 18*(4), 345-370.

Shofield, J. A. (1983). Performance and attendance at professional team sports, *Journal of Sport Behaviour, 6*(4), 196-206.

Siddiqi, K. O. (2011). Interrelations between service quality attributes, customer satisfaction and customer loyalty in the retail banking sector in Bangladesh. *International Journal of Business and Management, 6*(3), 13-36.

Sim, J., Mak, B., & Jones, D. (2006). A model of customer satisfaction and retention for hotels. *Journal of Quality Assurance in Hospitality & Tourism, 7*(3), 1-23.

Singh, J. (1991). Understanding the structure of consumers' satisfaction evaluations of delivery. *Journal of the Academy of Marketing Science, 19*(3), 223-244. service

Sivadas, E., & Baker-Prewitt, J. L. (2000). An examination of the relationship between service quality, customer satisfaction, and store loyalty. *International Journal of Retail & Distribution Management, 28*(2), 73-82.

Skard, S., Nysveen, H., & Pedersen, P. E. (2011). *Brand and customer experience in service organizations: Literature review and brand experience construct validation*. (SNF working paper No. SNF-Project No. 9033). Bergen, Norway: Centre for Service Innovation.

Smilansky, S. (2009). *Experiential marketing: A practical guide to interactive brand experiences*. London, UK: Kogan Page.

Solomon, R. L., & Corbit, J. D. (1974). An opponent-process theory of motivation: I. temporal dynamics of affect. *Psychological Review, 81*(2), 119.

Sparkes, A. (1992). *Research in physical education and sport: Exploring alternative visions*. Oxon, OX: Routledge.

Spreng, R. A., & Chiou, J. (2002). A cross-cultural assessment of the satisfaction formation process. *European Journal of Marketing, 36*(7/8), 829-839.

Standeven, J., & De Knop, P. (1999). *Sport tourism*. Champaign, IL: Human Kinetics.

Stein, M. (1997). Cult and Sport: The case of big red. *Mid-American review of sociology, 2*(2), 29-42.

Stevens, J. P. (1996). *Applied multivariate statistics for the social sciences*. Oxon, OX: Routledge.

Sumino, M., & Harada, M. (2004). Affective experience of J. league fans: The relationship between affective experience, team loyalty, and intention to attend. *Managing Leisure, 9*(4), 181-192.

Sureshchandar, G., Rajendran, C., & Kamalanabhan, T. (2001). Customer perceptions of service quality: A critique. *Total Quality Management, 12*(1), 111-124.

Surprenant, C. & Churchill, G. (1982). An investigation into the determinants of customer satisfaction. *Journal of marketing research, 19*(4), 491.

Svensson, P. (2007). Producing marketing: Towards a social-phenomenology of marketing work. *Marketing Theory, 7*(3), 271-290.

Swan, J. E., & Bowers, M. R. (1998). Services quality and satisfaction. *Journal of Services Marketing, 12*(1), 59-72.

Tam, J. L. M. (1999). The effects of service quality, perceived value, and customer satisfaction on behavioural intentions. *Journal of Hospitality and Leisure Marketing, 6*(4), 31-43.

Tanaka, J. S. (1984). *Some results on the estimation of covariance structure models*. Unpublish doctoral dissertation, University of California, Oakland, CA.

Tang, K. C., & Davis, A. (1995). Critical factors in the determination of focus group size. *Family Practice, 12*(4), 474-475.

Tapp, A., & Clowes, J. (2002). From “carefree casuals” to “professional wanderers”: Segmentation possibilities for football supporters. *European Journal of Marketing, 36*(11/12), 1248-1269.

Taylor, S. A., & Baker, T. L. (1994). An assessment of the relationship between service quality and customer satisfaction in the formation of consumers' purchase intentions. *Journal of Retailing, 70*(2), 163-178.

Theodorakis, N. D., & Alexandris, K. (2008). Can service quality predict spectators' behavioural intentions in professional soccer? *Managing Leisure, 13*(3-4), 162-178.

Theodorakis, N. D., Alexandris, K., Tsigilis, N., & Karvounis, S. (2013). Predicting spectators’ behavioural intentions in professional football: The role of satisfaction and service quality. *Sport Management Review, 16*(1), 85-96.

Theodorakis, N. D., Koustelios, A., Robinson, L., & Barlas, A. (2009). Moderating role of team identification on the relationship between service quality and repurchase intentions among spectators of professional sports. *Managing Service Quality, 19*(4), 456-473.

Thomas, G. (2009). *How to do your research project*. Thousand Oaks, CA: Sage.

Thompson, C. J., & Troester, M. (2002). Consumer value systems in the age of postmodern fragmentation: The case of the natural health microculture. *Journal of Consumer Research, 28*(4), 550-571.

Thompson, C. J., Locander, W. B., & Pollio, H. R. (1989). Putting consumer experience back into consumer research: The philosophy and method of existential-phenomenology. *Journal of Consumer Research, 16*(2), 133-146.

Thorne, F. C. (1963). The clinical use of peak and nadir experience reports. *Journal of Clinical Psychology, 19*(2), 248-250.

Tian-Cole, S. T., Crompton, J. K. & Willson, V. L. (2002). An empirical investigation of the relationships between service quality, satisfaction and behavioural intentions among visitors to a wildlife refuge. *Journal of Leisure Research, 34*, 1-24.

Torkzadeh, G., Koufteros, X., & Pflughoeft, K. (2003). Confirmatory analysis of computer self-efficacy. *Structural Equation Modeling, 10*(2), 263-275.

Torres-Moraga, E., Vásquez-Parraga, A. Z., & Zamora-Gonzalez, J. (2008). Customer satisfaction and loyalty: Start with the product, culminate with the brand. *Journal of Consumer Marketing, 25*(5), 302-313.

Traiger, S. (1994). The secret operations of the mind. *Minds machines*, 4, 303-315.

Tsai, S. (2005). Integrated marketing as management of holistic consumer experience. *Business Horizons, 48*(5), 431-441.

Tsai, S. C., & Chen, Y. H. (2011). How addiction behaviour as a factor of switching barrier affects fans' loyalty in sponsoring professional sports games: A case study on the fans behaviour toward Taiwan professional base ball games. *2011 8th International Conference on Service Systems and Service Management (ICSSSM)*, 1-5.

Tsaur, S., Chiu, Y., & Wang, C. (2007). The visitors' behavioral consequences of experiential marketing: An empirical study on Taipei zoo. *Journal of Travel & Tourism Marketing, 21*(1), 47-64.

Tsoukatos, E. & Rand, G. K. (2006). Path analysis of perceived service quality, satisfaction and loyalty in Greek insurance. *Managing service Quality, 16*(5), 501-519.

Tsuji, Y., Bennett, G., & Zhang, J. (2007). Consumer satisfaction with an action sports event. *Sport Marketing Quarterly, 16*(4), 199-208.

Tynan, C., & McKechnie, S. (2009). Experience marketing: A review and reassessment. *Journal of Marketing Management, 25*(5), 501-517.

Ullman, J. B., & Bentler, P. M. (2003). Structural equation modeling. In B. G. Tabachnick, & L. S. Fidell (Eds.), *Using multivariate statistics* (4th Eds.) (pp. 653-771). Boston, MA: Allyn & Bacon.

Urquhart, R. (2002). Speaking from experience. *Leisure and Hospitality Business, 1*(10), 15.

Van Doorn, M. (2006). *An inside story on the experience economy* (Rep. No. Technical Note PR-TN 2006/00129). Retrieved from http://citeseerx.ist.psu.edu/viewdoc/download?doi=10.1.1.66.6362&rep=rep1&type=pdf.

Vanhamme, J. (2008). The surprise-delight relationship revisited in the management of experience. *Recherche et Applications et Marketing (English Eds.), 2*(3), 113-138.

Varadarajan, R. (2010). Strategic marketing and marketing strategy: Domain, definition, fundamental issues and foundational premises. *Journal of the Academy of Marketing Science, 38*(2), 119-140.

Voigt, D. Q. (1980). American sporting rituals. In Ray (Eds.), *Rituals and ceremonies in popular culture* (pp. 125-140). Bowing Green, OH: Bowling Green University Popular Press.

Wainwright, S. P. (1997). A new paradigm for nursing: The potential of realism. *Journal of Advanced Nursing, 26*(6), 1262-1271.

Wakefield, K. L. & Sloan, H. J. (1995). The effects of team loyalty and selected stadium factors on spectator attendance. *Journal of Sport Management, 9*(2), 153-172.

Walls, A. R., Okumus, F., Wang, Y. R., & Kwun, D. J. W. (2011). An epistemological view of consumer experiences. *International Journal of Hospitality Management, 30*(1), 10-21.

Walls, A.R., Wang, Y. (2011). Experiential consumption and destination marketing. In Wang, Y., Pizam, A. (Ed.), *Destination marketing and management* (pp. 82-98). Wallingford, UK: CABI.

Walsh, G., Evanschitzky, H., & Wunderlich, M. (2008). Identification and analysis of moderator variables: Investigating the customer satisfaction-loyalty link. *European Journal of Marketing, 42*(9/10), 977-1004.

Wang, C. Y. (2007). *The effect of experiential marketing, experiential value, and involvement to the repurchase intention of audiences of the CPBL*. Unpublished master dissertation, National Taiwan Normal University, Taipei, Taiwan.

Wang, C. Y., & Lin, C. H. (2010). A study of the effect of TV drama on relationships among tourists' experiential marketing, experiential value, and satisfaction. *International Journal of Organizational Innovation, 2*(3), 107-123.

Wang, R. T., Zhang, J. J., & Tsuji, Y. (2011). Examining fan motives and loyalty for the chinese professional baseball league of Taiwan. *Sport Management Review, 14*(4), 347-360.

Wang, S. H. (2010). *A study on leisure constraints to fans of CPBL game watching on-site.* Unpublished master disseration, Feng Chia University, Taichung, Taiwan.

Warwick, D. P., Lininger, C. A., & Campbell, A. (1975). *The sample survey: Theory and practice.* New York, NY: McGraw-Hill.

Weaver, K., & Olson, J. K. (2006). Understanding paradigms used for nursing research. *Integrative Literature Reviews and Meta-analyses, 53*(4), 459-469.

Weber, R. (2004). The rhetoric of positivism versus interpretivism: A personal view. *MIS Quarterly, 28*(1), 3-12.

Weick, K. E. (1979). *The social psychology of organizing (topics in social psychology series)*. Boston, MA: Addison-Wesley.

Wertenbroch, K., & Dhar, R. (2000). Consumer choice between hedonic and utilitarian goods. *Journal of Marketing Research, 37*(1), 60-71.

West, S. G., Finch, J. F., & Curran, P. J. (1995). Structural equation models with non-normal variables: Problems and remedies. In R. H. Hoyle (Ed.), *Structural equation modeling: Concepts, issues and applications* (pp. 56-75). Thousand Oaks, CA: Sage.

Westbrook, R. A. (1980). Intrapersonal affective influences on consumer satisfaction with products. *Journal of Consumer Research, 7*(1), 49-54.

Westerbeek, H. M. & Shilbury, D. (2003). A conceptual model for sport services marketing research: integrating quality, value and satisfaction, *International Journal of Sports Marketing and Sponsorship, 5*(1), 11-31.

Wheaton, B. (1987). Assessment of fit in overidentified models with latent variables. *Sociological Methods & Research, 16*(1), 118-154.

Whitlatch, J. B. (2000). Evualuating reference services: A practical guide. London, UK: American library association.

Woodside, A. G., Frey, L. L., & Daly, R. T. (1989). Linking service quality, customer satisfaction, and behavioral intention. *Journal of Health Care Marketing, 9*(4), 5-17.

Wu, C. H. J., & Liang, R. D. (2009). Effect of experiential value on customer satisfaction with service encounters in luxury-hotel restaurants. *International Journal of Hospitality Management, 28*(4), 586-593.

Wu, C. H., & Liang, R. (2011). The relationship between white-water rafting experience formation and customer reaction: A flow theory perspective. *Tourism Management, 32*(2), 317-325.

Wu, F. L. (2009). *Structural equation modeling: Amos operation and applicationi*. Taipei: Taiwan: Wu-Nan Book.

Wu, H. C., Liao, L. C. C., & Tsai, T. F. (2012). A study of relationships among consumer cognition of spa hotel brand, service quality, experience, and repurchase intention. *2012 International Conference of Innovation Management and Technology Research (ICIMTR),* 148-151.

Wu, H. W. (2002). *The factors influencing the supported teams chose by professional baseball fans, and the relationship among supporting factors, loyalty and satisfaction.* Unpublished master disseration, National Sport University, Taoyuan, Taiwan.

Wu, J. H. (2007). *The relationship among customer value, experiential marketing, satisfaction and loyalty*. Unpublished master dissertation, Feng Chia University, Taichung, Taiwan.

Wu, M. F. (2004). *Study on the patterns of the leisure agriculture parks and experiential marketing based on the view of experience.* Unpublished master disseration, National Pingtung University of Science & Technology, Pingtung, Taiwan.

Wu, M. L., & Tu, C. T. (2008). *SPSS & the application and analysis of statistics* (2nd Eds.). Taipei, Taiwan: Wu-Nan.

Yang, D. W. (2006). *Key factors on baseball fans chossing teams to support and the correlation among experiential satisfaction, participation behaviour and loyalty: A case study on the Chinese Professional Baseball League.* Unpublished master disseration, Kun Shan University, Tainan, Taiwan.

Yeh, M. L. (2006). *The relationship among experiential marketing, experiential value, customer satisfaction and customer loyalty: An empirical study of TAIPEI city beitou sports center*. Unpublished master disseration. National University of Tainan, Tainan, Taiwan.

Yi, Y. (1990). A critical review of consumer satisfaction. In v. Zeithaml (Eds.), *Review of marketing* (pp. 68-123). Chicago, IL: American Marketing Assoication.

Yoo, Y. S., Cho, K. M. & Chon, S. S. (2003). The effect of customer satisfaction on repurchase intention at golf practice ranges in South Korea. *Korean Journal of Sport Management, 7*(2), 1-13.

Yoshida, M., & James, J. D. (2010). Customer satisfaction with game and service experiences: Antecedents and consequences. *Journal of Sport Management, 24*(3), 338-361.

Yu, S. Z. (2006). *A post-occupancy evaluation study on the professional baseball stadium - referring to the public usage.* Unpublished master disseration, National Taiwan University of Physical Education and Sport, Taichung, Taiwan.

Yuan, Y. H., & Wu, C. K. (2008). Relationships among experiential marketing, experiential value, and customer satisfaction. *Journal of Hospitality & Tourism Research, 32*(3), 387-410.

Yung, Y. F., & Bentler, P. M. (1996). Bootstrapping techniques in analysis of mean and covariance structures. In G. A. Marcoulides, & R. E. Schumacker (Eds.), *Advanced structural equation modeling: Issues and techniques* (pp. 195-226). Hillsdale, NJ: Lawrence Erlbaum Associates.

Zeithaml, V. A. (1988). Consumer perceptions of price, quality, and value: A means-end model and synthesis of evidence. *The Journal of Marketing, 52*(3), 2-22.

Zeithaml, V., & Bitner, M. J. (2003). *Services marketing: Integrating customer focus across the firm*. New York, NY: McGraw-Hill.

, R. (1992). The emerging art of service management. *Training, 29*(1), 36-42.

Zhang, J. J., Fogarty, T. D., Holland, S., & Stotlar, D. K. (2009). Hierarchical relationships among entertainment options, interests in professional sports, and professional sport consumption. *International Journal of Asian Society for Sport, Physical Education, and Dance, 7*, 69-84.

Zhang, J. J., Smith D. W., Pease, D. G., & Lam, E. T. C. (1998). Dimensions of spectator satisfaction toward support programs of professional hockey games. *Internatioinal Sport Journal, 2*(2), 1-17.

Zhang, J., Piatt, D., Ostroff, D., & Wright, J. (2005). Importance of in-game entertainment amenities at professional sporting events: A case for NBA season ticket holders. *Journal of Contemporary Athletics, 2*(1), 1-24.

Zhu, W. (1997). Making boostrap statistical inferences: A tutorial. *Research Quarterly for Exercise and Sport, 68*, 44-55.

Zins, A. H. (2001). Relative attitudes and commitment in customer loyalty models. *International Journal of Service Industry Management, 12*(3), 269-294.

Appendix 1

Author	Construct	Definition
Scott (1991:797)	Experience (generic)	Experience is not a word we can do without, although, given its usage to essentialist identity and reify the subject, it is tempting to abandon it altogether. But experience is so much a part of everyday language, so imbricated in our narratives that it seems futile to argue for its expulsion. It serves a way of talking about what happened, of establishing difference and similarity, of claiming knowledge that is "unassailable".
Pine et al. (1999)	Experience (generic)	Experiences are events that engage individuals in a personal way
Knuston et al. (2009)	Experience (generic)	Experience is something which is inherent to any individual. As every individual belongs to different environment, beliefs, attitudes, and ethics for the certain state; hence each person perceives experience accordingly.
Sundbo et al. (2008)	Customer experience	Customer experience is a mental journey that leaves the customer with memories of having performed something special, having learned something or just having fun.
Lewis et al. (2000:46)	Consumer experience	Consumer experience is "the total outcome to the customer from the combination of environment, goods and services purchased"
Mascarenhas et al. (2006)	Total customer experience (TCE)	A totally positive, engaging, enduring, and socially fulfilling physical and emotional customer experience across all major levels of one's consumption chain and one that is brought about by distinct market offering that calls for active interaction between consumers and providers.
Skard et al. (2011)	Brand and customer (B/C) experience	Experience as not only emotional responses, but undertake a more holistic approach by identifying affective, cognitive, and behavioural processes.

Note. From: The current research

Appendix 2

Date	Team	Place	Numbers of participant
12/02/2011	Brother Elephants	Taipei	7

Question 1

What kinds of events are held **before the game** during the regular season?

1. Signature meeting
2. Tacking photos
3. Food and souvenir Stands
4. Birthday Party
5. Drawing for prizes
6. Opening pitch
7. Family day (weekend only)
8. Theme day (sponsor day)
9. To welcome players' bus
10. To celebrate for achieving record

Question 2

What kinds of events are held **during the game** during the regular season?

1. Mexican Wave
2. Tacking photos with celebrities
3. Drawing for prizes
4. Catching homerun or foul ball
5. Fans' cheer activities (Role play)
6. Fans' cheer activities (posts)
7. Fans' cheer activities (cheer song)
8. Fans' cheer activities (cheer band)
9. To celebrate for achieving record

Question 3

What kinds of events are held **after the game** during the regular season?

1. To see players' bus off
2. MVP award of the game
3. Show after the game (Weekend only)
4. Fireworks after the game (Weekend only)
5. To celebrate for achieving record

Question 4

In your opinion, what was the most special game during last season in your opinion?

Mr. White: The series of championship of 2010. Plays had a great performance. The won all games in the series.

Mr. Su：The second half season championship. We didn't expect the team can beat other teams and go to the post-season games. To throw the colored ribbons for celebrating the championship was a great memory.

Miss Wei：When a player reached to the 1000th hit, club played a special recording which was taken from former coaches and player's family. It wasn't only a great night; the ticket of that game was difficult to buy so that I am able to share the experience to my friends.

Mr. Kuo：Same as Mr. Su, it was unexpected that our club was able to win the second half championship. I bought three games to make sure that I won't miss the moment.

Mr. Iron Man：The 999th win and the 1000th win, I made a huge post during the game.

Mr. Chen：the 1000th win and enjoy the countdown.

Miss Chung：I usually watch the live experience with husband. I think the most special game for me was 999th and 1000th wins. My husband and I witnessed that moment.

Question 5

In your opinion, what were the ordinary experience and extraordinary experiences during regular season games?

Mr. Chen：When a play or the club is going to reach special record; I usually have different feeling during the game. Apart from that, watch a game is normal thing. Meanwhile, some events are held after the special record or the club sometimes holds some events during the season. I think that are bonus of watching a game, and can be seen as an extraordinary experience.

Mr. Kuo：The result of game is reversed just before the last inning. It is a kind of extraordinary experience. Fans also expect more events can be held by clubs.

Mr. White: I will say the extraordinary experience for me is a player or the club has special achievement.

Mr. Iron Man：it depends on the degree of involvement. There are two kind of activity in Taiwanese baseball games. One is held by clubs, another one is created by fans. For those fans who are full of live experience, most of games or events are ordinary experience, but for people who don't have much live experiences will be extraordinary.

Miss Chung：The extraordinary is about good performance or a good event. Others are ordinary.

Question 6

In your opinion, what types of experience does your club provide? (ordinary or extraordinary)

Mr. Iron Man：ordinary experience. Because I have a lot of live experience, the club can do more creative events or marketing. They haven't done enough in my opinion.

Mr. Chen：I think the club provides ordinary experience.

Mr. White: It is also about media. If there is no media to deliver more information to public, there is no special experience to other people who don't have much live experience. Therefore, the club provides ordinary experience.

Mr. Kuo：ordinary experience. I think our club doesn't focus on providing extraordinary experience so much.

Miss Wei：I agree with Mr. Kuo. I don't the club provide extraordinary events.

Mr. Su：The club has to improve this part. There a lot of extra events can be held by the club.

Miss Chung：Maybe is ordinary experience, but I am not sure. I didn't have enough live experience in 2010. My feeling is the club doesn't really provide many extra events in the games, if we compare with other clubs.

Question 7
What would you think if your club would try to organize more extraordinary events around the games?

Mr. Iron Man：the marketing strategy of this club is different. The club doesn't focus on developing new consumers. However, the market of Taiwanese baseball is getting smaller and smaller. They have to create more special experiences in order to attract more attentions from new consumers.

Mr. White: I support this idea. Each club has to won its unique characteristic so as to attract more fans.

Mr. Chen：The club spends too much resource on current fans. It will be a good idea, if the club can create more marketing events to gain new fans. Moreover, those events won't be useful unless the club can be more exquisite.
Mr. Kuo：Some events like summer and winter baseball is a good idea, but it should be more exquisite.

Mr. Iron Man：There is more events can be held. For instance, the experience day which means fan can walk in to the field and sit on the bench. It won't cost a lot but is able to satisfy fans. Theme days also can be changed. For example, students' day, lady's night. Don't just hold a theme day for sponsors. When those marketing events are divers, it will create more extraordinary experience and attract more fans.

Miss Chung：I will be happy to stay in the stadium for 4-5 hours. My son probably loves too.

Question 8 Are there any other extraordinary experiences that can be found during regular season games?

Mr. Su：Weekend games have more people for sure.

Miss Wei：It is a big different in two Taipei area stadiums. Ten-Mu has weekend games, families are majority type of fan. It is not easy high when you watch games. In Sin-Jun stadium is another story, Mexican waves come again and again. Fans always be crazy

Date	Team	Place	Numbers of participant
13/02/2011	Sinon Bulls	Taichung	6

Question 1

What kinds of events are held **before the game** during the regular season?

1. Signature meeting
2. Food and souvenir Stands
3. Opening pitch
4. To welcome players' bus
5. Theme day (sponsor day)
6. Shopping

Question 2

What kinds of events are held **during the game** during the regular season?

1. Mexican Wave
2. Theme day (sponsor day)
3. Catching homerun or foul ball
4. Fans' cheer activities (Role play)
5. Fans' cheer activities (posts)
6. Fans' cheer activities (posts)
7. Fans' cheer activities (cheer song)
8. Fans' cheer activities (cheer band)
9. To celebrate for achieving record

Question 3

What kinds of events are held **after the game** during the regular season?

1. MVP award of the game
2. To see players' bus off

Question 4

What is the most special game during last season in your opinion?

Mr Wen：The series of championship of 2010. There was a conflict during the series. I couldn't forget that we lost four games. During the season, I think the unforgettable think is the interaction between fans.

Miss Chen：We won the first half season championship in other club's stadium. The club arranged a special for throwing the colored ribbons in next home game, but we lost on that day. It became very awkward for celebrating a game which we lost.

Miss. Kuo：There was a lot extension games in last year. It was sad when we lost at the end. The feeling of lost and win in extension games can be enlarged so easily. Therefore, the extension games were most special game in last year.

Miss Lin：I am a big fan of player NO. 37, if he has a good performance. I always go crazy and

feel special in that game.

Miss Karan：I love watching homerun, When our club players have homerun, I will go crazy as well. I don't remember the detail in any game, but I usually remember did they have homerun in the game.

Mr. Wu：I don't really care about the result. I bring a good feeling to watch the games. However, if the cheer leader can create good atmosphere, I will feel very impressive. It is the main reason why I love live experience.

Question 5

In your opinion, what were the ordinary experiences and extraordinary experiences during regular season games?

Mr Wen：I can feel many strange or special fans in home stadium games. It is very extraordinary experience to see their acting or singing. In general, I think ordinary experience is about the game, others are extraordinary.

Miss Chen：Some events arranged by fans are extraordinary experiences, such as they held a trip for 3 days in east part of Taiwan (Note: east part of Taiwan is a tourist spot), we had a trip on day time and had three guest games during the night. It was a great idea. It's not part of game, but it relates to the game. Thus, it is extraordinary for me.

Miss. Kuo：The games are ordinary. The extraordinary one likes Mr. Wen said it is about the interaction between strange fans. Moreover, I feel evens during the game can be seen as extraordinary experiences.

Miss Lin：Each player has his cheer song. I think it is extraordinary experience. Others are ordinary experience.

Miss Karan：The games are ordinary, but the events which are before or after the games are extraordinary. It is bonus of fans who buy the tickets.

Mr. Wu：The games are core idea of experience, other events are additional. The ordinary experience likes the games which don't have themes or events are held during the weekday games. For weekends, there are more special events are held in the games because majority of spectators are family or children. That is the extraordinary experience. On other hand, the game which player breaks record also can be seen as extraordinary experience.

Question 6

In your opinion what types of experience does your club provide? (ordinary or extraordinary)

Mr. Wu：Our club provides many events which don't relate to games. In addition, the person who

doing the opening pitch are usually ordinary people such as the manager of sponsor or youth baseball player. The club arranged events in terms of benefits. Therefore, they don't invite celebrities because of budget. I think the club has wrong marketing strategy. It is not only sponsors have to satisfy, but they also need to listen to the voice from fans. If they don't change their marketing strategy, fans are difficult to receive extraordinary experience. Thus, I think our club is more likely providing ordinary experience.

Mr Wen：I don't expect the club provides extraordinary experience. I think the games are main thing for the club. Marketing strategy is about finding sponsors.

Miss. Chen：I felt that it is about ordinary. The club doesn't make marketing job right. It isn't very attractive to fans. Some of evens are held by fans not the club.

Miss. Lin：I didn't' have a lot of life experience in last year. According to my experience before, I think the club provides ordinary more than extraordinary.

Miss Karan：Ordinary experience. The club only focuses on the players' performance.

Mr. Wu：The club didn't do a lot of marketing during last year. Thus, the experience is about ordinary one which focused on the games.

Miss. Kuo：My feeling is about the games, I don't think the club did many things on marketing or crated the extraordinary experience.

Question 7

What would you think if your club would try to organize more extraordinary events around the games?

Mr. Wu：Fans and the club have different standpoint. We would like to take in part of events which relate to players such as the celebration of achieving special record or theme day for one player. However, the club tented to treat fans as the mother company's consumers. It is wrong marketing strategy. I do care about will I be there when the special record is achieved and can share with my friends. I am also willing to attend any event which is for the celebration. On the other hand, I might be very happy if I draw a flight ticket for the club. But I don't care if I don't' get it. In other words, the club worked so hard on the sponsorship, but they omit the feeling of fans. Fans will be very happy if the club holds an event for a player who is going to retire. The club is not only showing the respect to the player, but also the fans can feel the club cares about their feeling. It will bring more power to attract spectators to become loyal fans.

Miss Chen：I agree if the club can have more events. It is not for each game, but it will be very good if events can be held regularly in different types. The main point is fans can be very close

to players. Thus, even those events are not held during the season. I believe that fans are willing to pay and take in part of it. Personally I think the sponsorship is important but the club doesn't up it in right place. Once I went to watch the game, the stadium was opened for all fans to visit, so that I had a chance to experience the field. The club can have this kind of events which relate to games or players. However, the club puts too much sponsorship and less experiential events. It will be very good if the club can change then around.

Miss. Kuo：We had a BBQ in the stadium before and the players had a special show.
It was my first time to discover players' personality. The distance between players and fans is smaller and smaller. They could be good friends. I think it is good for having a events with players. However, I think it will influence players if we have too much events during the games. For example, if the games were delayed by opening pitch, it may interrupt start pitch's preparation. The better time of having special events are championship, post-season, and so on. I think extraordinary games can be more special by having more events. If those are ordinary games, the best way is keeping in ordinary which means the games only. Meanwhile, the quality of performance groups. The club used to invite not really professional performance groups, so that fans didn't really appreciate the show. It won't be a positive thing for the club.

Mr Wen：I do agree with Miss Kuo. I think events should be more exquisite.

Miss Lin：I agree with this idea. But it will be good if events are held by fans' point of view. Fans will be more interesting to take in part of it.

Miss Kaen：I agree with this idea too, if the marketing can be more exquisite. I believe better marketing strategy attracts fans to buy the ticket for live experience. Moreover, if the events and me has a connection, I will have high possibility to join.

Question 8 Are there any other extraordinary experiences that can be found during regular season games?

Mr Wen：The number of fans in weekday and weekend is different. There are more fans and events during the weekends. During the weekdays, fans are the same group of people even each person sits on the same place.

Miss. Chen：there is two stadiums in Taichung. The club tents to use better stadium during the weekends. So not only number of fans, but also stadiums is different.
Miss Lin：Weekends have a chance to meet players because of few fans in the stadium.

Miss Karen：The number of fans can affect my feeling of watching live experience

Mr. Wu：So do I, if there is more fans, I will feel better and high.

Miss Kuo：I think the performance of player is also effect by the number of fans so that weekend games are much better than weekdays.

Date	Team	Place	Numbers of participant
19/02/2011	Uni-President Lions	Tainan	7

Question 1

What kinds of events are held **before the game** during the regular season?

1. Opening pitch	2. Food and souvenir Stands
3. Fun fair	4. Theme day (sponsor day)
5. Drawing for prizes (treasure hunt)	6. Playing documentary film
7. To march into stadium with players	8. Signature meeting

Question 2

What kinds of events are held **during the game** during the regular season?

1. Mexican Wave	2. Theme day (sponsor day)
3. Drawing for prizes	4. Drawing for prizes
5. Pitch and run game in 5th inning	6. Birthday party in 5th inning
7. Fans' cheer activities (Role play)	8. Fans' cheer activities (posts)
9. Fans' cheer activities (cheer song)	10. Fans' cheer activities (cheer band)
11. Fans' cheer activities (cheer squad)	12. Mascot show
13. To celebrate for achieving record	14. Playing documentary film
15. BBQ day (national holidays)	16. Sending gifts

Question 3

What kinds of events are held **after the game** during the regular season?

1. To exchange ticket into food or drink (win or weekend)	2. Theme day (sponsor day)
3. Signature meeting	4. MVP award of the game
5. Mascot show	6. To see players' bus off

Question 4

What is the most special game during last season in your opinion?

Miss Lai：Player No 10 reached No 100th wining. I think it is more important than our championships in last year. This record for the player is only once in his life. So when we went through with him was a great and special experience.

Miss Lin：I am a big fan of Player No. 32. He as a star pitcher in April of 6th which was two days before his birthday. He had a good performance; we were so happy for his and believed that was the best birthday gift. So it was my impressive game in last year.

Miss Shu：Player No 10 reached No 100th wining. That had a lot of fans which is more than usual in home stadium. Fans believed there were Korean baseball searches to look at his pitching. We thought it might be not only his No 100 wining, it could be his last game in CPBL. So, it was special and great game for me.

Mr. Ju：I didn't have many live experiences in last year, but I couldn't forget that we scored a lot runs but lost at the end. It was really bad but unforgettable experience

Mr Chen：In the middle of the season, we lost games in the row. It was difficult time for players and fans.

Mr. Pao：We had a walk-off homerun last year. I couldn't forget the feeling that night. We lost the game in 1 min. I sat on the bench and could believe it.

Mr Dun：Same as Mr. Ju, I could believe wd score a lot but lost at the end. On the other hand, the opening game in last year had a very special guest to be our opening pitcher：cosplay fans.

Miss Lai：I think is about special games which the players reach a special record. Because I didn't go to the stadium when the club invited a celebrity to be guest.

Question 5

In your opioion, what were the ordinary experiences and extraordinary experiences during regular season games?

Mr Shu：The extraordinary experience likes when I go to the stadium for live experience and I meet a group of people who are really excited. They sometimes shout at referees or players.

Mr Dun：For me, the games are more important than other things. So, the games are important and ordinary experience. Others are extraordinary.

Mr. Ju：In 2004, we were trying to reach third time championship in row. The chance of meeting with old friends was my reason why I bought a ticket to have live experience. The game was place of meeting for us. So, if you ask me about ordinary or extraordinary experience. Meeting with friends is extraordinary experience because we have a chance to meet together. The game is ordinary which we have same interest.

Mr. Pao：I think extraordinary is about games. We didn't get the season championship and we were so close. I feel those games in last series was very special.

Mr Dun：The extraordinary is theme day, because there are many events are held in one game. It

will be very special and fun in that game. The ordinary experience is regular games which only have one or two even in the games.

Mr Chen：When the game is about the ranking or against rival club, I will receive extraordinary experience. Apart from that, most of games are ordinary.

Miss Lin：The ordinary experience is from the games. However, sometimes extraordinary experience comes from the games. For example, if the player doesn't often have homerun, but he can deliver a homerun in the game. I will feel it is extraordinary.

Miss Lai：Same as Miss Lin. One homerun, one nice play. All of them are extraordinary too.

Question 6

In your opinion what types of experience does your club provides? (ordinary or extraordinary)

Mr Chen：I think the club provides extraordinary experience. The club holds a very good event. It is a bonus for our live experience. However, this won't influence my decision of going to the stadium for live experience.

Miss Lin：Loyal fans go to the stadium isn't because of those events. It is for sure that the events are able to attract more people who are not rally fans to go to the stadium for live experience. However, our club has done very well in this part.

Mr. Dun：In my experience, the club is No One which has the best and the most events in the league.

Mr. Pao：The club provides very nice environment for fans so as to increase fans' satisfaction. The club is not only providing ordinary experience, but also extraordinary experience is more important for the club marketing strategy.

Mr. Ju：The club provides a lot of resources on this part. We can see from the stadium to each game, the club refurbished, reconstructed and created good environment for players and fans. I believe why they do those things is because the club would like to deliver more extraordinary experience to fans.

Question 7

What would you think if your club would try to organize more extraordinary events around the games?

Mr Dun：More events are held in the games, those games are more attractive. However, if the club stop holding events, fans will be angry Thus, once the club would like to provide more extraordinary experience, they should keep doing this idea and improve it. Otherwise, it will influence the number of specters in the games.

Mr Pao：I like this idea, because there were only four teams in 2010. If there is more events are held, the games will be more popular.

Miss Lin：More events to create extraordinary is good for clubs to find new fans. Because a baseball game usually needs 4-5 hours and the ticket price is about 300 NTD which is expensive than a movie ticket. So if there is more events and more experience can be received, it will help the development of CPBL in Taiwan.

Miss Lai：If I know there is a special event in today's game, I will consider going to the stadium. I feel great when I spend 300NTD for a game and watch many events in the game.

Miss Shu：Events are important in terms of providing extraordinary experience. If we can feel the clubs really cares about fans' impression, we will be more loyal. In other words, it is a good idea for the club is not only attracting new fans, but also increases the loyalty from old fans.

Mr. Ju：It is a good idea that the club has more experiences by providing events. However, the quality of event should be better. If the event is coarser, it is not bonus of the club. It could be a negative thing to the club so that influence our willing to go to the stadium.

Question 8 Are there any other extraordinary experiences that can be found during regular season games?

Miss Lin：We had a mascot family and cheer squad which was only in the weekends.

Mr Dun：The family of mascot used to have a show during the weekends, but last year the club changed the policy. The mascots don' come out regularly.

Miss Lai：There were many people and events in weekends. The emotions were affected by the result of the game.

Miss Lin：The number of fans in weekends and weekdays is different. If there is more fans, the atmosphere will be good even we lost the game.

Mr Chen：If the number of fan is small, I will feel nothing special. Cheering needs many people do it together.

Date	Team	Place	Numbers of participant
20/02/2011	La New Bears	Kaohsiung	7

Question 1

What kinds of events are held **before the game** during the regular season?	
1. Opening pitch (celebrities)	2. Opening pitch (player's family)
3. Opening show	4. To welcome players' bus
5. Food and souvenir Stands	6. Singing cheer songs

Question 2

What kinds of events are held **during the game** during the regular season?

1. Mexican Wave	2. Catching homerun or foul ball
3. Homerun fireworks	4. Mascot show
5. Fans' cheer activities (role play)	6. Fans' cheer activities (posts)
7. Fans' cheer activities (cheer song)	8. Fans' cheer activities (cheer band)
9. Fans' cheer activities (NO10 Fans board)	10. Fans' cheer activities (cheer squad)
11. Fans' cheer activities (Big screen)	

Question 3

What kinds of events are held **after the game** during the regular season?

1. To see players' bus off	2. MVP award of the game
3. MVP award of the game	4. Fireworks after the game
5. Signature meeting	6. Drawing for prizes
7. Sending gifts	

Question 4

What is the most special game during last season in your opinion?

Miss Su：No 52. Player was trying to reach No100th homerun in the last few week of season 2010. I was waiting for it when he came to the hitting area.

Mr. Tai：the club invited some celebrities to be the opening pitch guest. Some of my friends love this event. It brings more energy for the base games.

Miss Wen：I love NO 31 player, he had very good performance. He delivered a walk-off homerun and say good bye to the guest team.

Question 5

In your opinion, what were the ordinary experiences and extraordinary experiences during regular season games?

Mr Tai：The ordinary experience is about the games, players The extraordinary experience is about theme day or special event day. I think the game is about ordinary, extraordinary is about everything apart from the game.

Mr. Ming：I think ordinary experience is from 1st to 9th inning. Extra-ordinary is about events before or after games. Such as firework or opening pitch. However, when there is a special event is reached also can be seen as extra-ordinary.

Question 6

In your opinion what types of experience does your club provide? (ordinary or extraordinary)
Miss Yao：I think is extraordinary, because our club has No 10 fans support board which is the only special event in the league. Mr. Lee：I believe that it is special too. The club has special decoration in the stadium and offers exclusive food in home team games. Miss Lin：The club provides good environment for fans so we can see many different events or special show during the games. The club is the best one in the league.
Question 7 What would you think if your club would try to organize more extraordinary events around games?
Miss Lin：I think the clubs is good at this part. They are going to change new home stadium. I hope they can keep this strategy to the new home. Mr. Ming：The reason why I become this club's fan is because they do care about our feeling in many places. We go to the stadium is not only for a game, but also can be a great show. I can watch very nice game and enjoy food, drink and show at the same time. Mr Tai：They held many events, but it lack of changes. If the club can adjust, I believe the club will be more popular.
Question 8 Are there any other extraordinary experiences that can be found during regular season games?
Miss Su：To be honest, the ticket box office was poor last year because of gambling scandal. The club was trying to do a lot of marketing in home stadium, but wasn't very good. It is the reason why the club wants to move to north city. Mr. Ming：I think weekends used to be more exciting than weekdays. I can see more food stand, more beautiful female fans or cheer squad and so on.

Appendix 3

Part I Consumer Experience

After today's game, please give a number that shows your opinion of the sentences below

(1means strongly disagree，7strongly agree)

01	The game experience was visually overwhelming
02	The sounds of the game experience were overwhelming
03	Today's game provided many different types of sensory stimulation
04	Attending this game strengthened the bonds I have with the friends or relatives I came with
05	Attending this live game strengthened my relationship with the club
06	Attending a live game strengthened my relationships with the players
07	Something about today's game surprised me a lot
08	Something about today's game gave me a lot of joy
09	Something about today's game excited me
10	Overall, I feel very positive emotions about today's game
11	I think this game helped me feel like I belong to a group with a shared identity
12	I think this game helped me appreciate the pressure that players are under
13	I think this game helped me to understand the rule of baseball
14	I think this game showed me the importance of spirit in sport
15	This game inspired me to learn how to play baseball
16	I lost track of time while watching today's game
17	This game made me forget my immediate surroundings
18	This game made me forget about the bad world outside baseball
19	The players' performance were good

20	The teams provided a high-quality game for me
21	Relevant information about players was provided on the scoreboard during the game
22	The players interacted well with the spectators
23	The concessions offered a wide variety of foods
24	The quality of food of the concession stands satisfied me a lot
25	The staff were competent and accurately fulfilled their roles
26	The staff were friendly and enthusiastic
27	The aesthetic design of the arena and facilities is aesthetic
28	Functionality and the layout of the arena are good
29	The facility is safe
30	There are enough signs directing me to various necessities
31	The function and design of the stadium scoreboard are good
32	There are attractive pre or in game shows entertainment
33	The seats are comfortable enough

Please give a number that rating your experience of today's game

(1 means very ordinary，7 means very extraordinary)

34 In comparison with other games, how ordinary was your experience of today's game

Part II Consumer Satisfaction

After today's game, please give a number that shows your opinion of the sentences below

(1means strongly disagree，7strongly agree)

01	I am satisfied with my decision to attend this game today
02	It was a wise choice to attend this game today

03	I really have enjoyed today's game
04	I am satisfied with my decision to attend games this season
05	It is a wise choice to attend games in this season
06	Overall, I have really enjoyed games this season

Part III Consumer Loyalty

After today's game, please give a number that shows your opinion of the sentences below

(1means strongly disagree，7 means strongly agree)

01	I would be committed to the team even if they had no star players...
02	I would never switch my loyalty from this team, even if my close friends were fans of another team
03	Even if this team lacked physical skill, I would remain committed to them .....……...
04	It would be difficult for me to change my beliefs about this team

After today's game, please give a number that shows your opinion of the sentences below

(1 means very low，7 means very high)

05	The probability that I will attend another game of my team in the future is
06	The probability that I will attend the next game of my team is
07	The likelihood that I would recommend my friends to come to live CPBL game in the future is

Part VI，Personal information

01 Gender: Male, Femal

02 Age: _____years old

03 Marrige: Single, Married (have_____children), Others_____

04 Education: Elementary, Junior High, Senior High, University, Master and above

05 Occupation：_____

06 For this game, which club you support? Brother Elephants, Sinon Bulls, Uni-President 7-Eleven Lions, Lamigo Monkeys, Not in above

If you are fan of club, how long have you been a fan of the club? _____years

07 How many games have you attended 2011 season? Less than 10, Between 11 and 20 , 21 and over

08 How many games have you watched on TV 2011 season? Less than 10, Between 11 and 20 , 21 and over

09 How many games have you attended 2010 season? Less than 10, Between 11 and 20 , 21 and more

10 How many games have you watched on TV 2010 season? Less than 10, Between 11 and 20 , 21 and over

11 On average，how much do you spend on game tickets and club merchandise per month? Under,1000NTD, Between 1001 and 1500, Between 1501 and 2000,2001 and over

12 Please leave your email, in order to ask few questions about your attendance in the future. (It’s optional, but it will be good if you can leave email to help us)

Note：This personal information will only be used in the research and not for any other purpose.

Please check again that you have answered all questions

Thank you for your help

Appendix 4

Part I Consumer Experience

After today's game, please give a number that shows your opinion of the sentences below

(1means strongly disagree，7strongly agree)

01	The game experience was visually overwhelming
02	The sounds of the game experience were overwhelming
03	Today's game provided many different types of sensory stimulation
04	The players interacted well with the spectators
05	Attending this live game strengthened my relationship with the club
06	Attending a live game strengthened my relationships with the players
07	Something about today's game surprised me a lot
08	Something about today's game gave me a lot of joy
09	Something about today's game excited me
10	I think this game helped me feel like I belong to a group with a shared identity
11	I think this game helped me appreciate the pressure that players are under
12	I think this game showed me the importance of spirit in sport
13	I lost track of time while watching today's game
14	This game made me forget my immediate surroundings
15	This game made me forget about the bad world outside baseball
16	The players' performance were good
17	The teams provided a high-quality game for me
18	Relevant information about players was provided on the scoreboard during the game
19	The concessions offered a wide variety of foods

20	The quality of food of the concession stands satisfied me a lot
21	The staff were competent and accurately fulfilled their roles
22	The staff were friendly and enthusiastic
23	The aesthetic design of the arena and facilities is aesthetic
24	Functionality and the layout of the arena are good
25	The facility is safe
26	There are enough signs directing me to various necessities
27	The function and design of the stadium scoreboard are good
28	There are attractive pre or in game shows entertainment
29	The seats are comfortable enough

Please give a number that rating your experience of today's game

(1 means very ordinary，7 means very extraordinary)

30 In comparison with other games, how ordinary was your experience of today's game

Part II Consumer Satisfaction

After today's game, please give a number that shows your opinion of the sentences below

(1means strongly disagree，7strongly agree)

01	I am satisfied with my decision to attend this game today
02	It was a wise choice to attend this game today
03	I really have enjoyed today's game
04	I am satisfied with my decision to attend games this season
05	It is a wise choice to attend games in this season
06	Overall, I have really enjoyed games this season

Part III Consumer Loyalty

After today's game, please give a number that shows your opinion of the sentences below

(1means strongly disagree，7 means strongly agree)

01 I would be committed to the team even if they had no star players...

02 I would never switch my loyalty from this team, even if my close friends were fans of another team

03 Even if this team lacked physical skill, I would remain committed to them

04 It would be difficult for me to change my beliefs about this team

After today's game, please give a number that shows your opinion of the sentences below

(1 means very low，7 means very high)

05 The probability that I will attend another game of my team in the future is

06 The probability that I will attend the next game of my team is

07 The likelihood that I would recommend my friends to come to live CPBL game in the future is

Part VI，Personal information

01 Gender: Male, Femal

02 Age: _____years old

03 Marrige: Single, Married (have_____children), Others_____

04 Education: Elementary, Junior High, Senior High, University, Master and above

05 Occupation：_____

06 For this game, which club you support? Brother Elephants, Sinon Bulls, Uni-President 7-Eleven Lions, Lamigo Monkeys, Not in above

If you are fan of club, how long have you been a fan of the club? _____years

07 How many games have you attended 2011 season? Less than 10, Between 11 and 20 , 21

and over

08 How many games have you watched on TV 2011 season? Less than 10, Between 11 and 20 , 21 and over

09 How many games have you attended 2010 season? Less than 10, Between 11 and 20 , 21 and more

10 How many games have you watched on TV 2010 season? Less than 10, Between 11 and 20 , 21 and over

11 On average，how much do you spend on game tickets and club merchandise per month? Under,1000NTD, Between 1001 and 1500, Between 1501 and 2000,2001 and over

12 Please leave your email, in order to ask few questions about your attendance in the future. (It's optional, but it will be good if you can leave email to help us)

Note：This personal information will only be used in the research and not for any other purpose.

Please check again that you have answered all questions

Thank you for your help

Appendix 5

Table 13: Item-Total Statistics of Sense dimension

	Scale Mean if Item Deleted	Scale Variance if Item Deleted	Corrected Item-Total Correlation	Cronbach's Alpha if Item Deleted
EX1	10.78	6.186	.813	.801
EX 2	10.63	6.488	.749	.859
EX 3	10.86	6.668	.764	.846

Table 14: Item-Total Statistics of Relate dimension

	Scale Mean if Item Deleted	Scale Variance if Item Deleted	Corrected Item-Total Correlation	Cronbach's Alpha if Item Deleted
EX 4	9.60	9.443	.470	.860
EX 5	10.51	6.729	.700	.627
EX 6	10.35	6.555	.736	.583

Table 15: Item-Total Statistics Emotion dimension

	Scale Mean if Item Deleted	Scale Variance if Item Deleted	Corrected Item-Total Correlation	Cronbach's Alpha if Item Deleted
EX7	16.45	14.684	.757	.864
EX8	16.01	14.522	.819	.841
EX9	16.02	14.189	.844	.831
EX10	15.90	16.306	.640	.905

Table 16: Item-Total Statistics of Think dimension

	Scale Mean if Item Deleted	Scale Variance if Item Deleted	Corrected Item-Total Correlation	Cronbach's Alpha if Item Deleted
EX11	21.75	21.229	.646	.778
EX12	21..68	20.709	.701	.761
EX13	21.45	22.507	.581	.796
EX14	21.32	21.363	.728	.757
EX15	21.88	22.416	.457	.838

Table 17: Item-Total Statistics of Immersion dimension

	Scale Mean if Item Deleted	Scale Variance if Item Deleted	Corrected Item-Total Correlation	Cronbach's Alpha if Item Deleted
EX16	15.80	17.089	.759	.854
EX17	16.90	16.321	.799	.839
EX18	15.76	17.605	.709	.873

Table 18: Item-Total Statistics of Consumer Experience scale

	Scale Mean if Item Deleted	Scale Variance if Item Deleted	Corrected Item-Total Correlation	Cronbach's Alpha if Item Deleted
EX1	95.57	405.284	.748	.951
EX2	95.40	408.942	.700	.952
EX3	95.64	407.201	.746	.951
EX4	95.25	411.092	.651	.953
EX5	96.21	403.612	.652	.953
EX6	96.03	401.510	.696	.952
EX7	95.92	402.423	.739	.951
EX8	95.46	399.279	.828	.950
EX9	95.49	399.854	.808	.950
EX10	95.34	407.279	.714	.952

Table 18: Item-Total Statistics of Consumer Experience scale (continued)

	Scale Mean if Item Deleted	Scale Variance if Item Deleted	Corrected Item-Total Correlation	Cronbach's Alpha if Item Deleted
EX11	95.49	401.981	.756	.951
EX12	95.63	404.606	.713	.952
EX13	95.38	414.887	.569	.954
EX14	95.25	408.373	.718	.952
EX15	95.78	412.323	.519	.955
EX16	95.65	399.740	.740	.951
EX17	95.95	400.677	.701	.952
EX18	95.60	403.034	.684	.952

Table 22: Item-Total Statistics of Service Quality sclae

	Scale Mean if Item Deleted	Scale Variance if Item Deleted	Corrected Item-Total Correlation	Cronbach's Alpha if Item Deleted
SQ1	63.89	272.448	.540	.927
SQ2	64.09	264.666	.675	.923
SQ3	64.65	257.493	.645	.924
SQ4	64.42	274.545	.491	.928
SQ5	65.52	266.426	.655	.924
SQ6	65.65	264.722	.650	.924
SQ7	64.31	272.407	.618	.925
SQ8	64.11	271.804	.624	.925
SQ9	64.81	255.843	.746	.921
SQ10	64.72	257.422	.778	.920
SQ11	64.59	258.904	.785	.920
SQ12	64.56	262.474	.755	.921
SQ13	64.92	256.902	.723	.922
SQ14	64.62	271.425	.527	.927
SQ15	65.51	261.238	.637	.924

Table 27: Item-Total Statistics of Transaction-specific satisfaction dimension

	Scale Mean if Item Deleted	Scale Variance if Item Deleted	Corrected Item-Total Correlation	Cronbach's Alpha if Item Deleted
CS1	10.78	8.607	.878	.911
CS2	10.74	8.406	.893	.899
CS3	10.66	8.734	.855	928

Table 28: Item-Total Statistics of Overall satisfaction dimension

	Scale Mean if Item Deleted	Scale Variance if Item Deleted	Corrected Item-Total Correlation	Cronbach's Alpha if Item Deleted
CS4	10.28	8.465	.859	.879
CS5	10.22	8.800	.871	.871
CS6	10.39	8.890	.808	.920

Table 29: Item-Total Statistics of Consumer satisfaction scale

	Scale Mean if Item Deleted	Scale Variance if Item Deleted	Corrected Item-Total Correlation	Cronbach's Alpha if Item Deleted
CS1	26.25	48.207	.862	.939
CS2	26.22	47.978	.864	.939
CS3	26.12	48.570	.841	.941
CS4	26.39	47.855	.837	.942
CS5	26.33	48.166	.871	.938
CS6	26.50	48.707	.803	.946

Table 33: Item-Total Statistics of Attitudinal loyalty dimension

	Scale Mean if Item Deleted	Scale Variance if Item Deleted	Corrected Item-Total Correlation	Cronbach's Alpha if Item Deleted
CL1	16.87	15.753	.810	.881
CL2	16.53	17.754	.780	.891
CL3	16.70	16.317	.840	.869
CL4	16.52	17.314	.765	.895

Table 34: Item-Total Statistics of Behavioural loyalty dimension

	Scale Mean if Item Deleted	Scale Variance if Item Deleted	Corrected Item-Total Correlation	Cronbach's Alpha if Item Deleted
CL5	11.09	6.654	.805	.778
CL6	11.36	6.936	.726	.851
CL7	11.06	7.067	.743	.835

Table 35: Item-Total Statistics of Consumer loyalty scale

	Scale Mean if Item Deleted	Scale Variance if Item Deleted	Corrected Item-Total Correlation	Cronbach's Alpha if Item Deleted
CL1	33.90	48.253	.770	.902
CL2	33.56	51.066	.773	.901
CL3	33.74	48.943	.809	.897
CL4	33.57	50.270	.760	.902
CL5	33.47	51.654	.786	.900
CL6	33.74	53.443	.653	.913
CL7	33.48	53.865	.665	.912

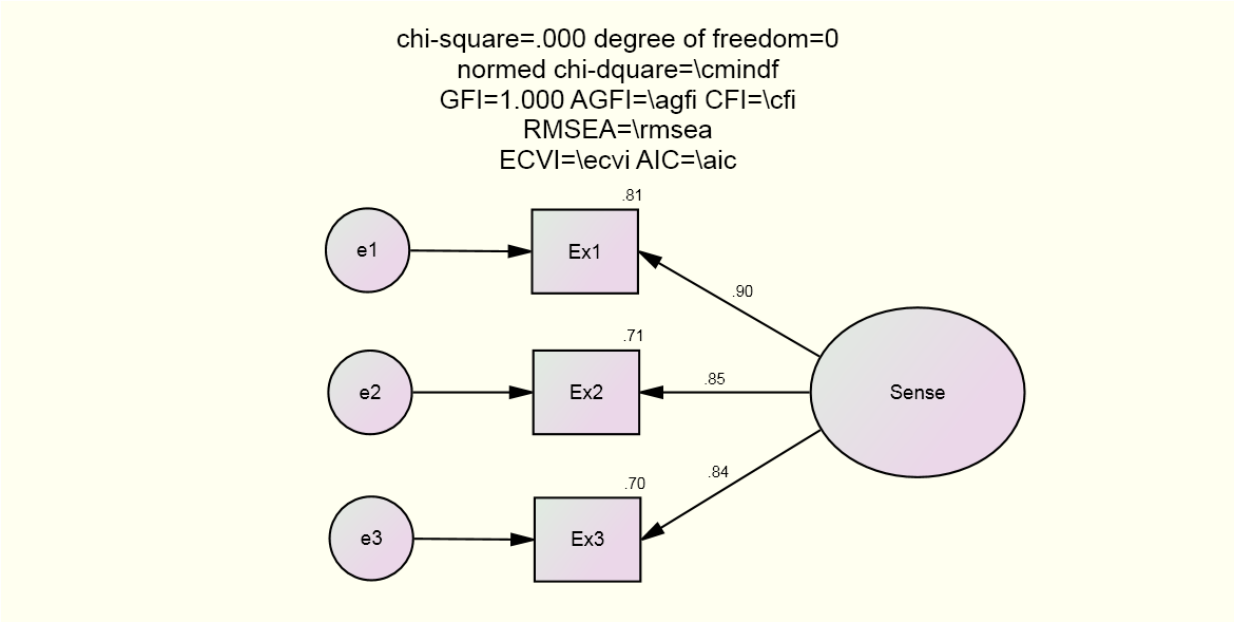

Figure 11 The CFA model of SENSE dimension

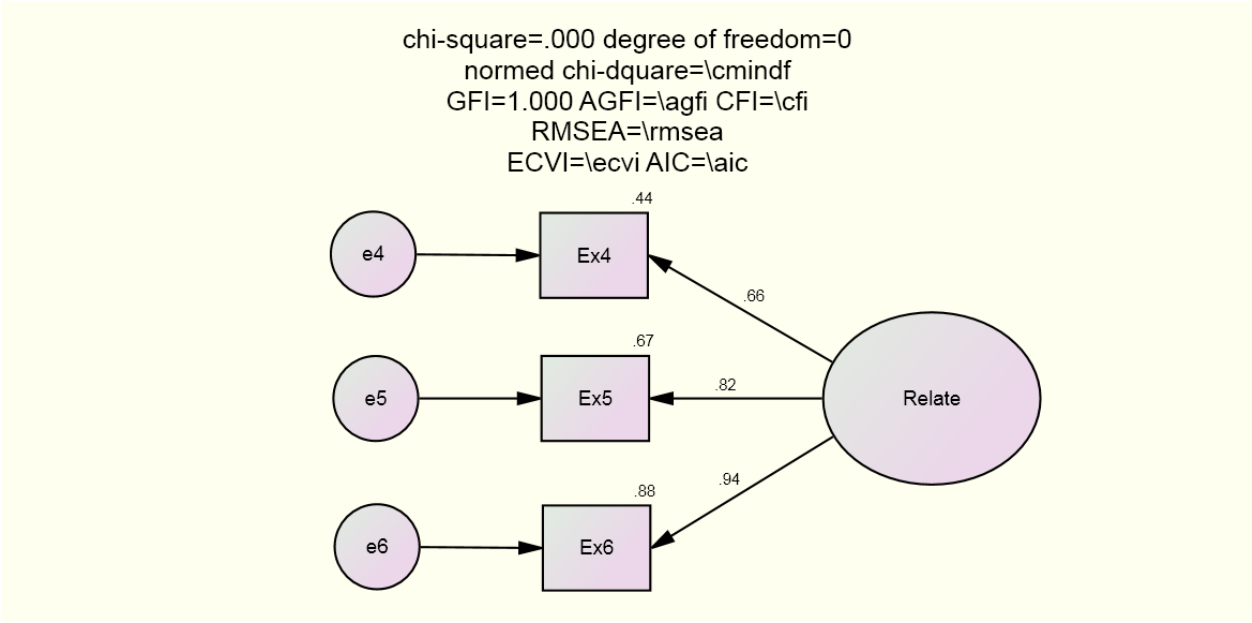

Figure 12: The CFA model of RELATE dimension

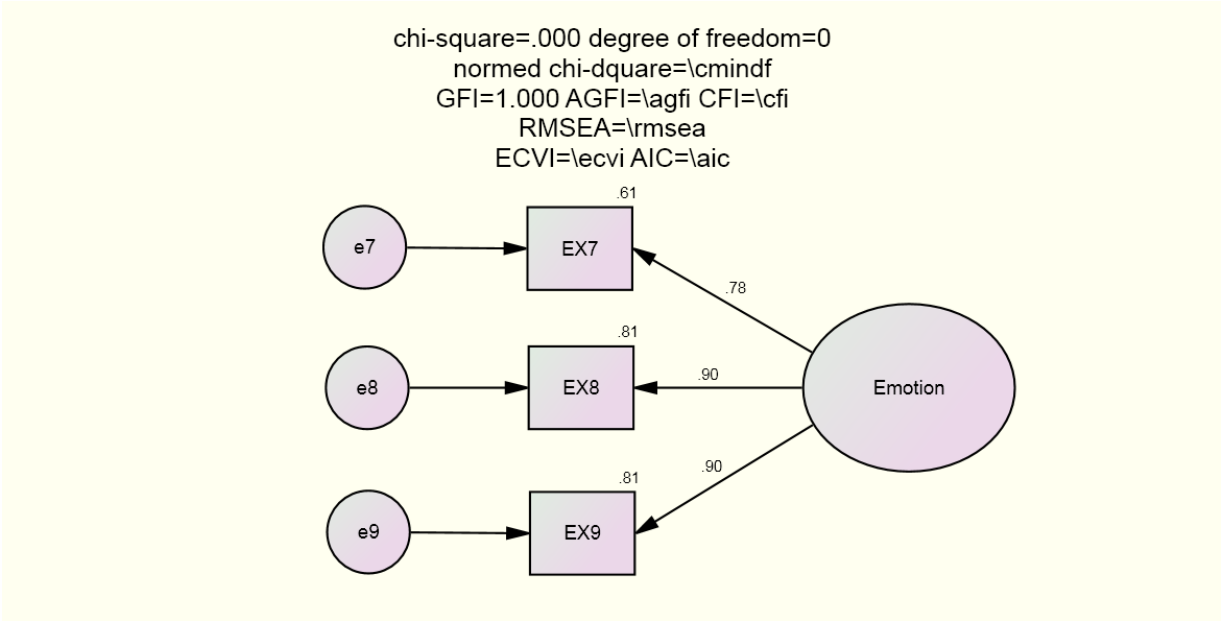

Figure 13: The CFA model of EMOTION dimension

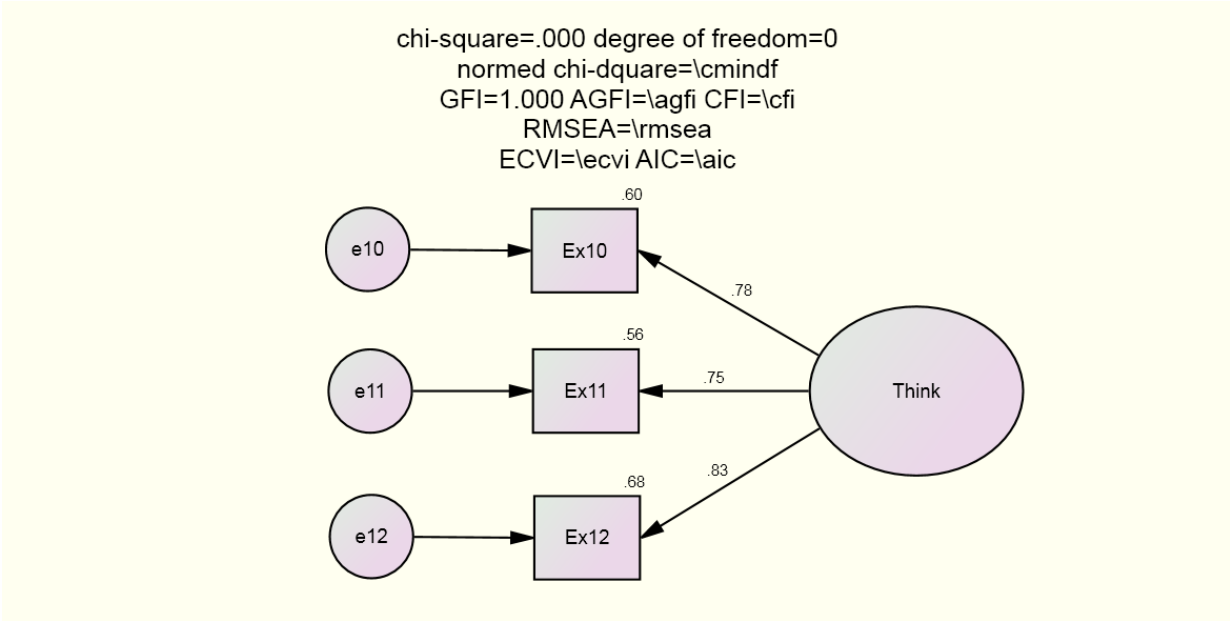

Figure 14: The CFA model of THINK dimension

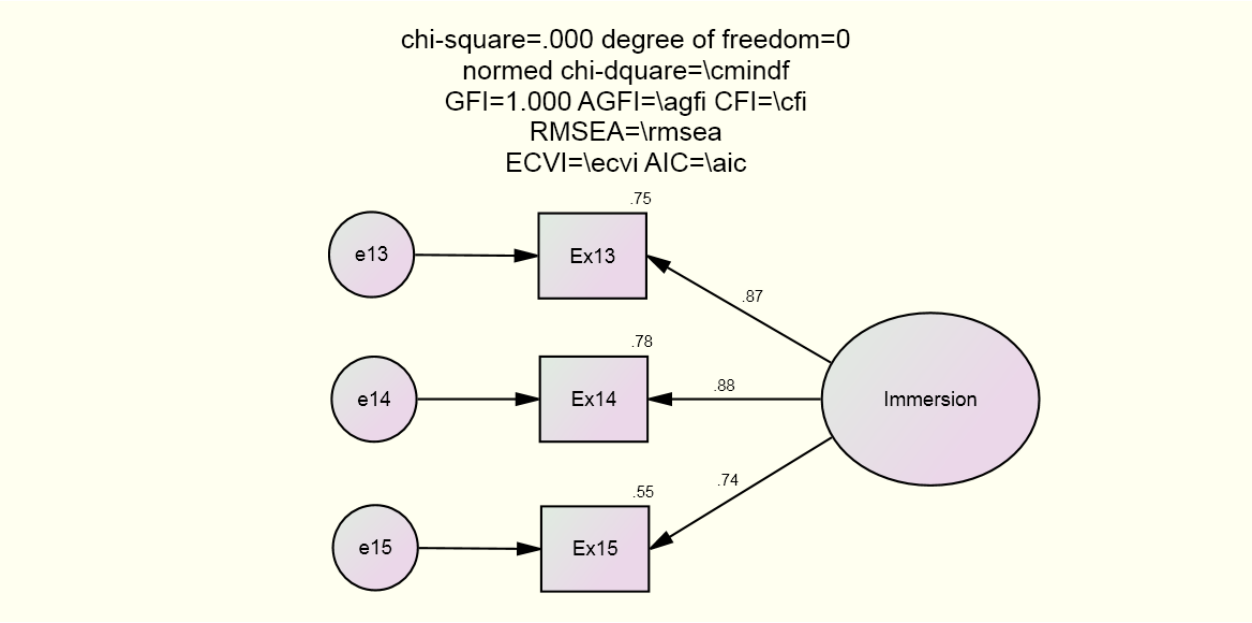

Figure 15: The CFA model of IMMERSIOM dimension

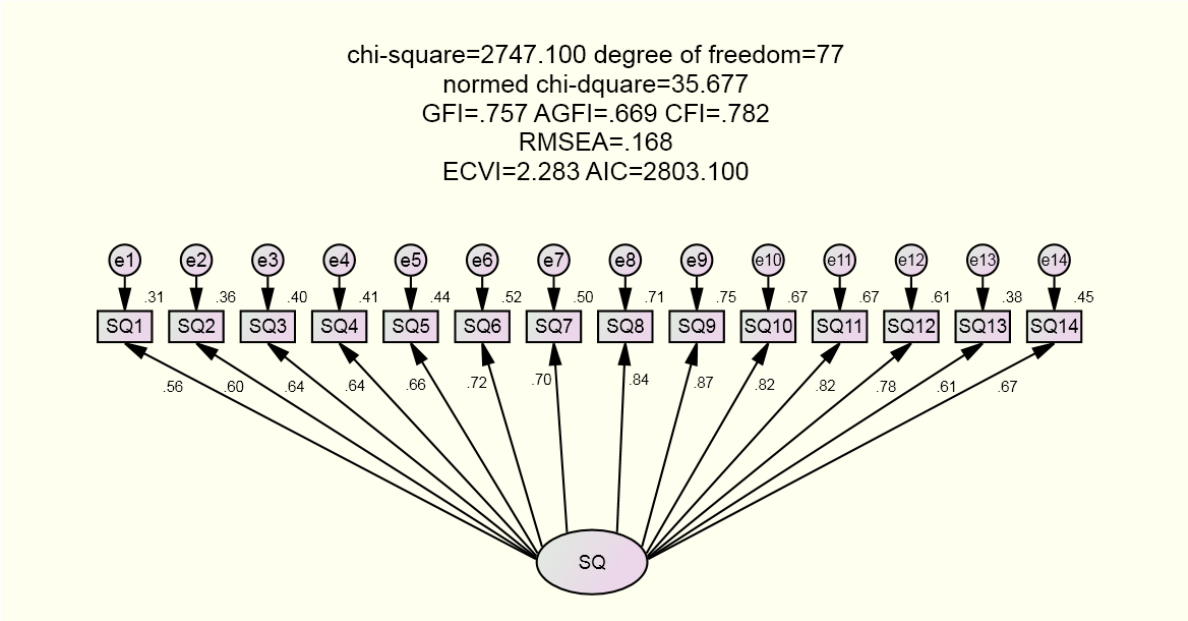

Figure 16: The CFA model of Service Quality dimension

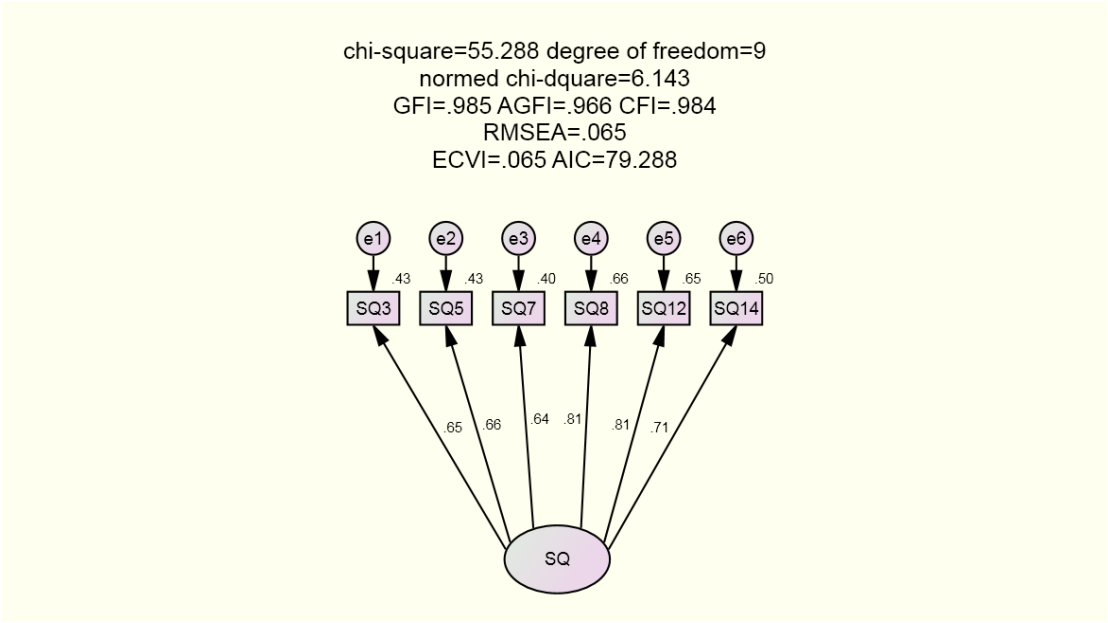

Figure 17: The CFA model of Service Quality dimension (Revised)

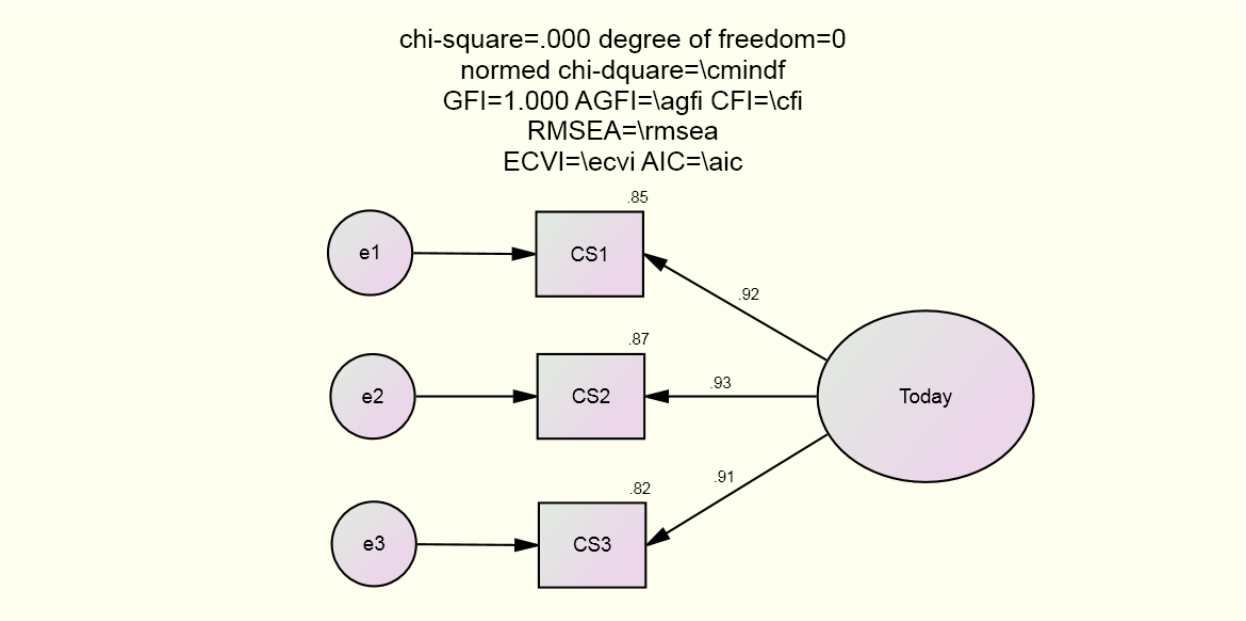

Figure 18: The CFA model of Today Satisfaction (transaction-specific) dimension

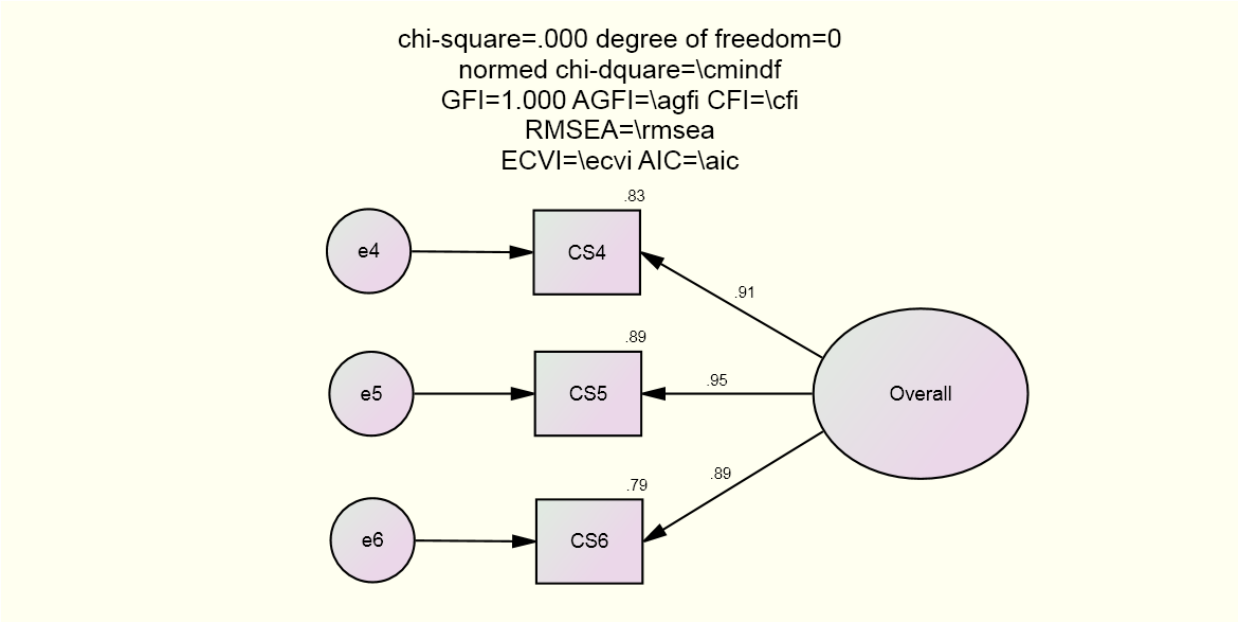

Figure 19: The CFA model of Overall Satisfaction dimension

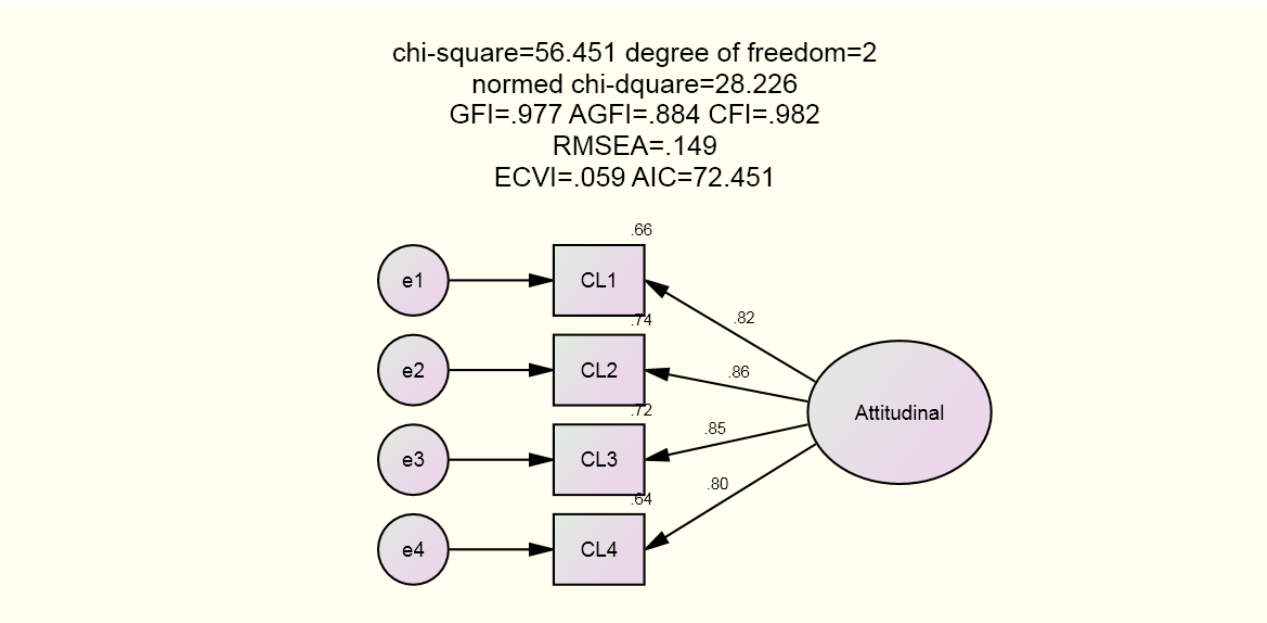

Figure 20: The CFA model of Attitudinal Loyalty dimension

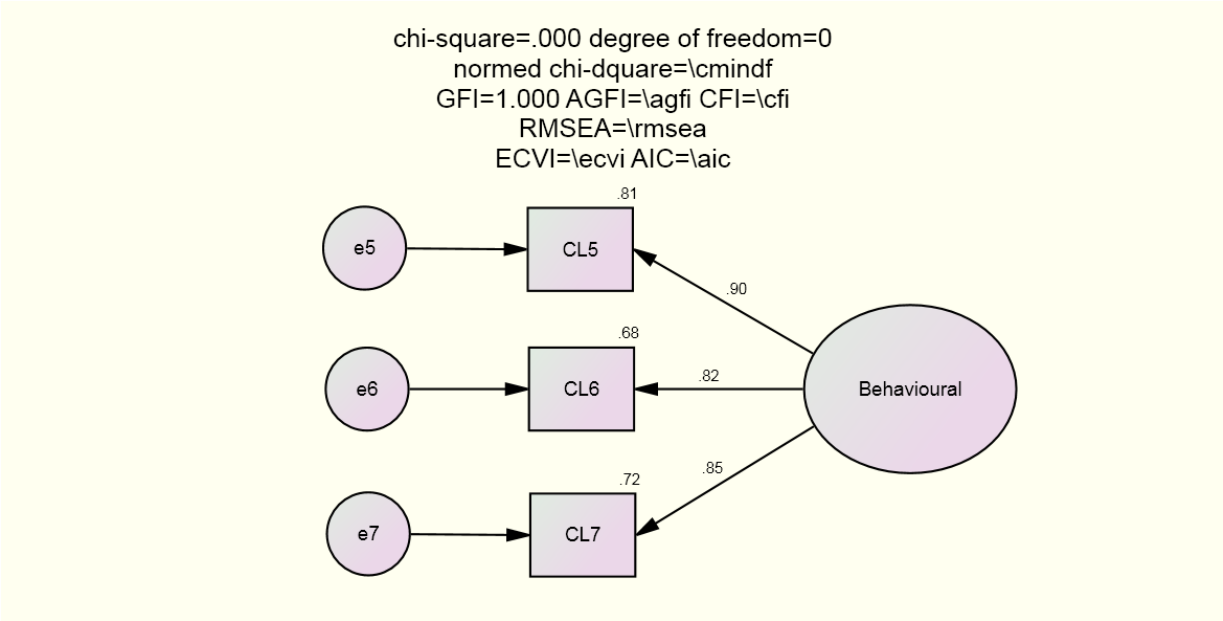

Figure 21: The CFA model of Behavioural Intention Loyalty dimension

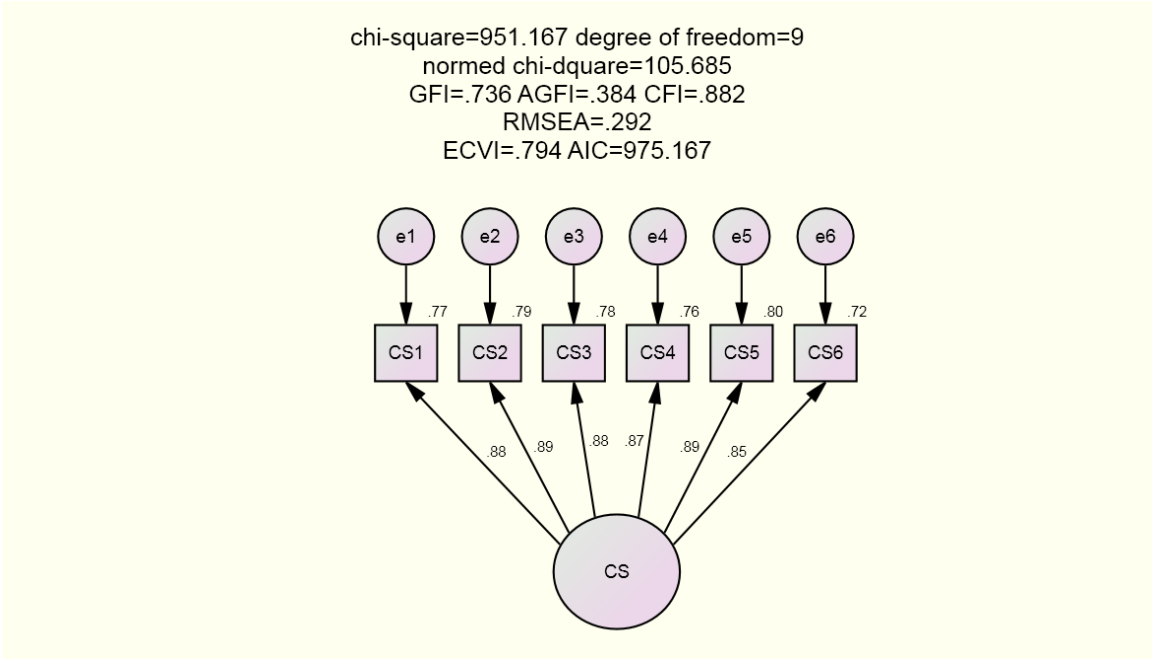

Figure 26: 1st order CFA of Consumer Satisfaction in single dimension

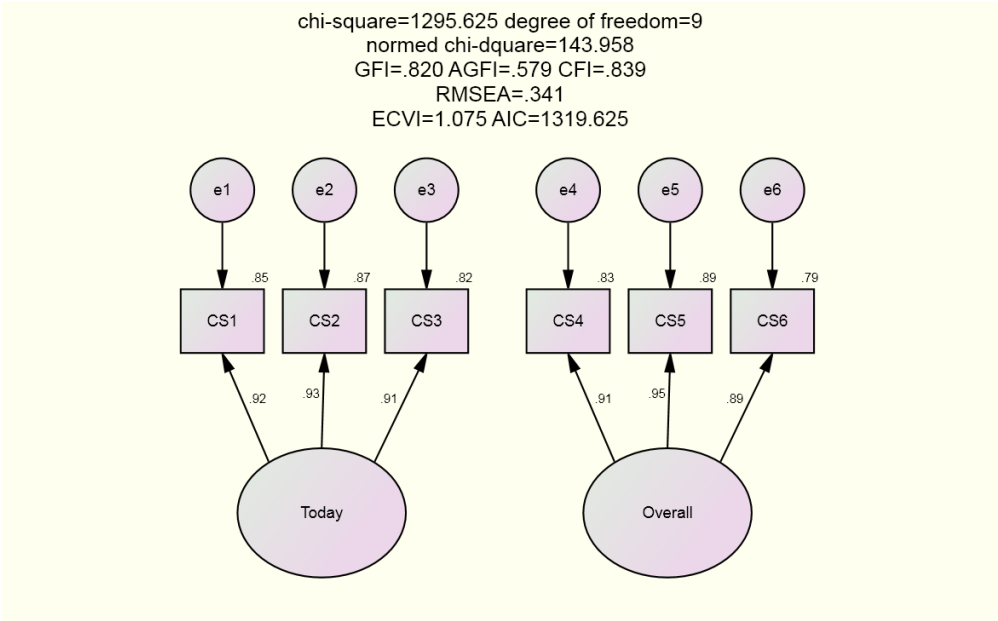

Figure 27: 1st order CFA of Consumer Satisfaction in 2 dimensions (without correlation)

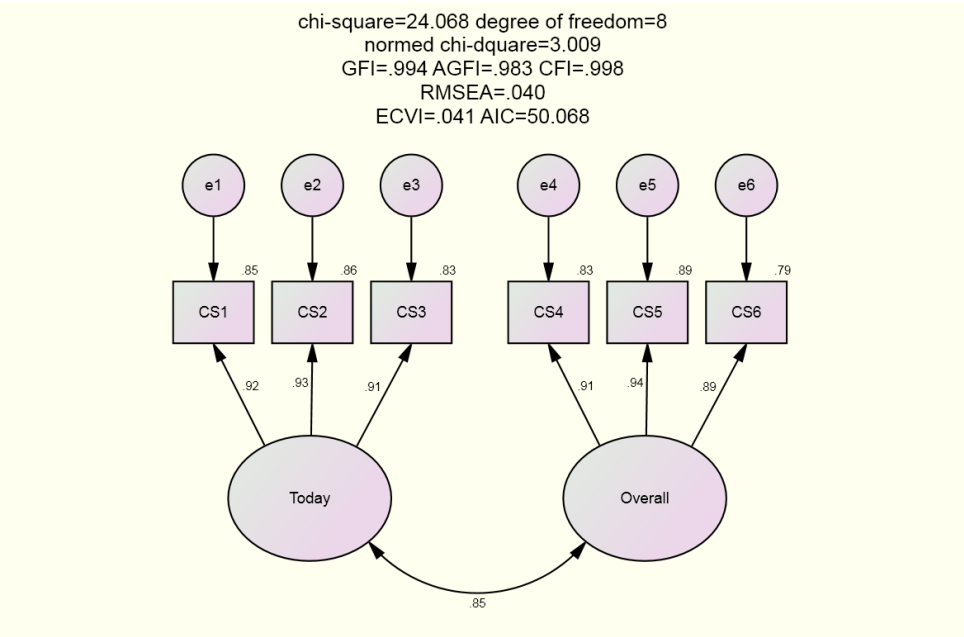

Figure 28: 1st order CFA of Consumer Satisfaction in 5 dimensions (with correlation)

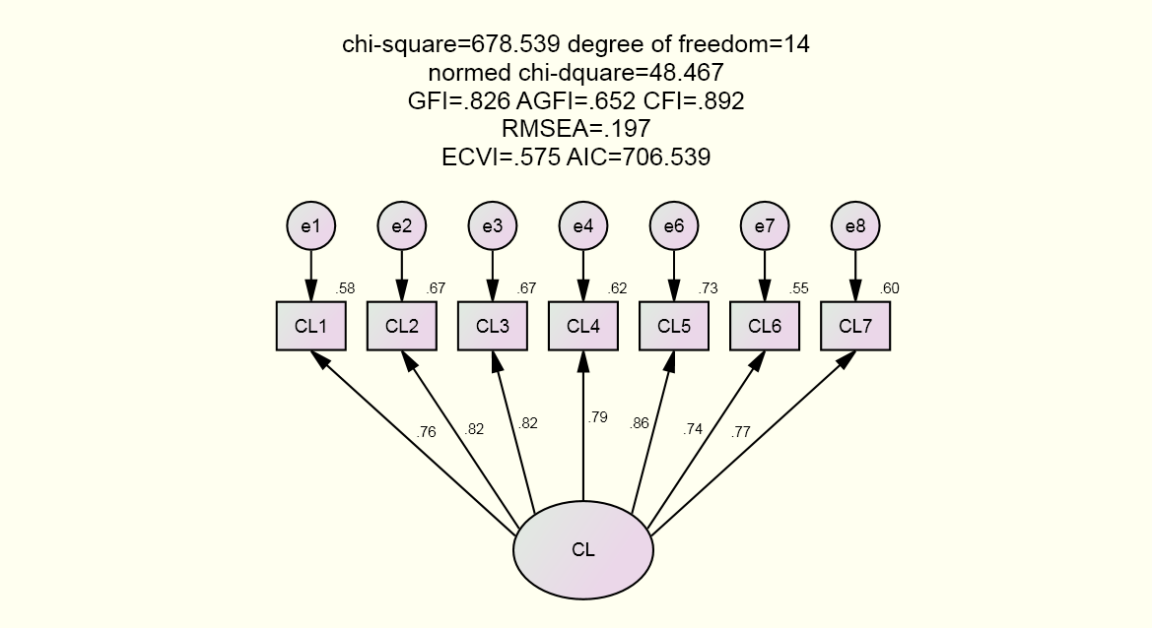

Figure 30: 1st order CFA of Consumer Loyalty in single dimension

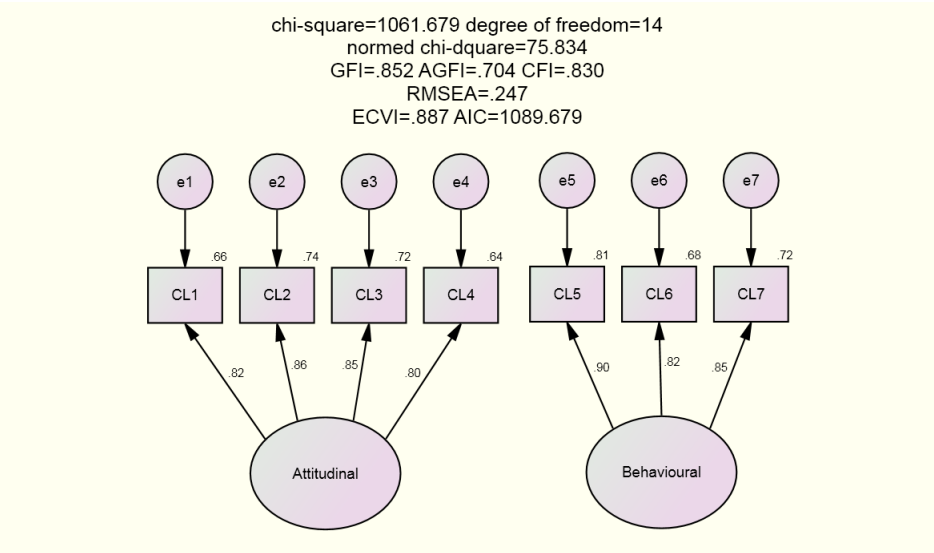

Figure 31: 1st order CFA of Consumer Loyalty in 2 dimensions (without correlation)

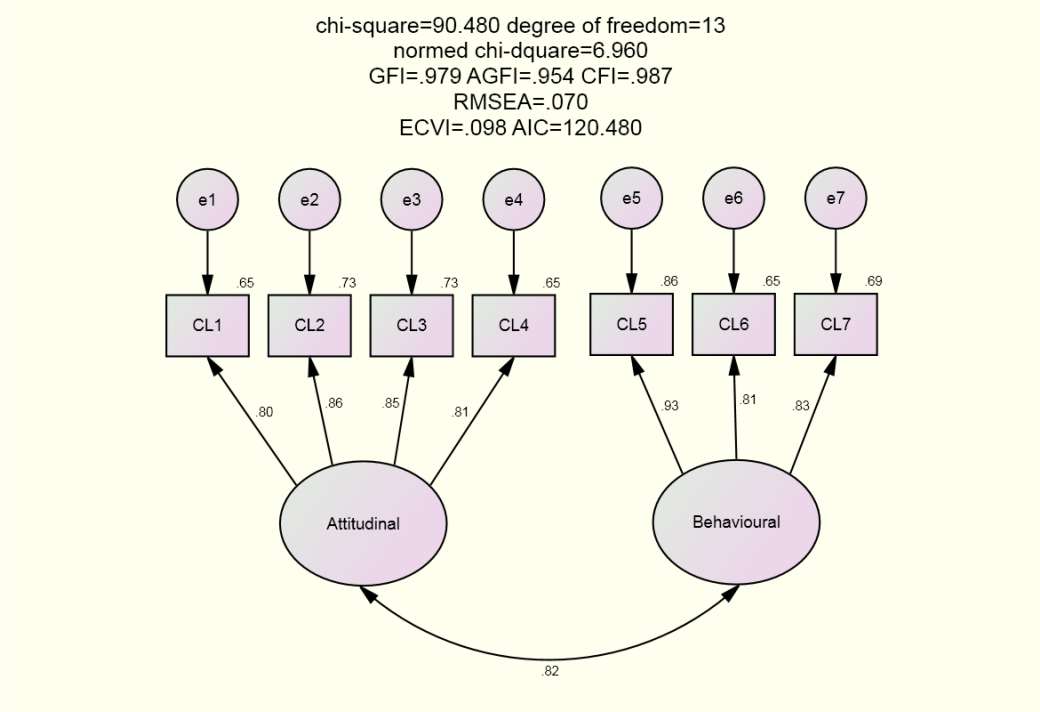

Figure 32: 1st order CFA of Consumer Loyalty in 2 dimensions (with correlation)

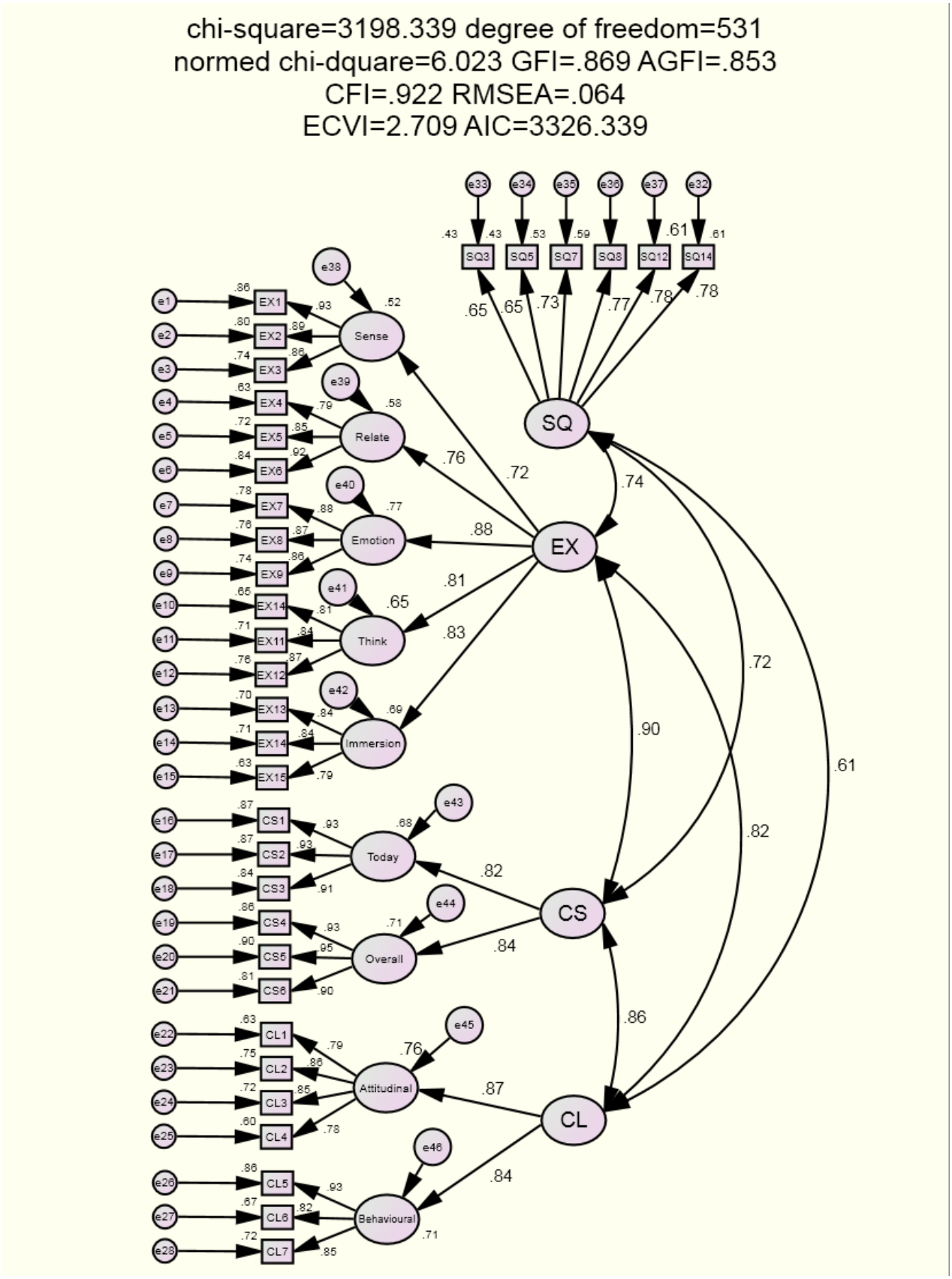

Figure 34: Assessment of multi-collinearity

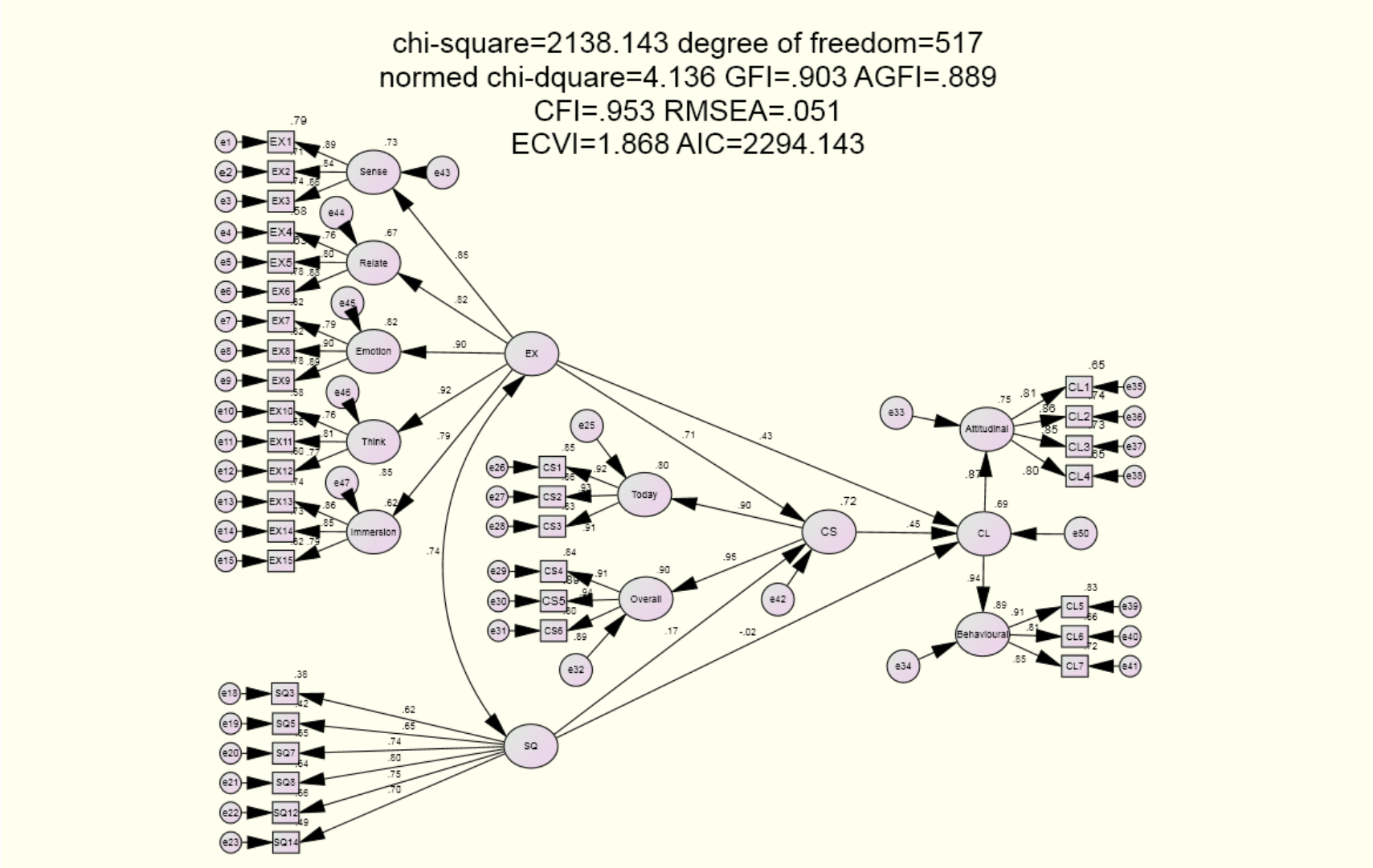

Figure 35: Bollen two steps factor analysis (SEM model)

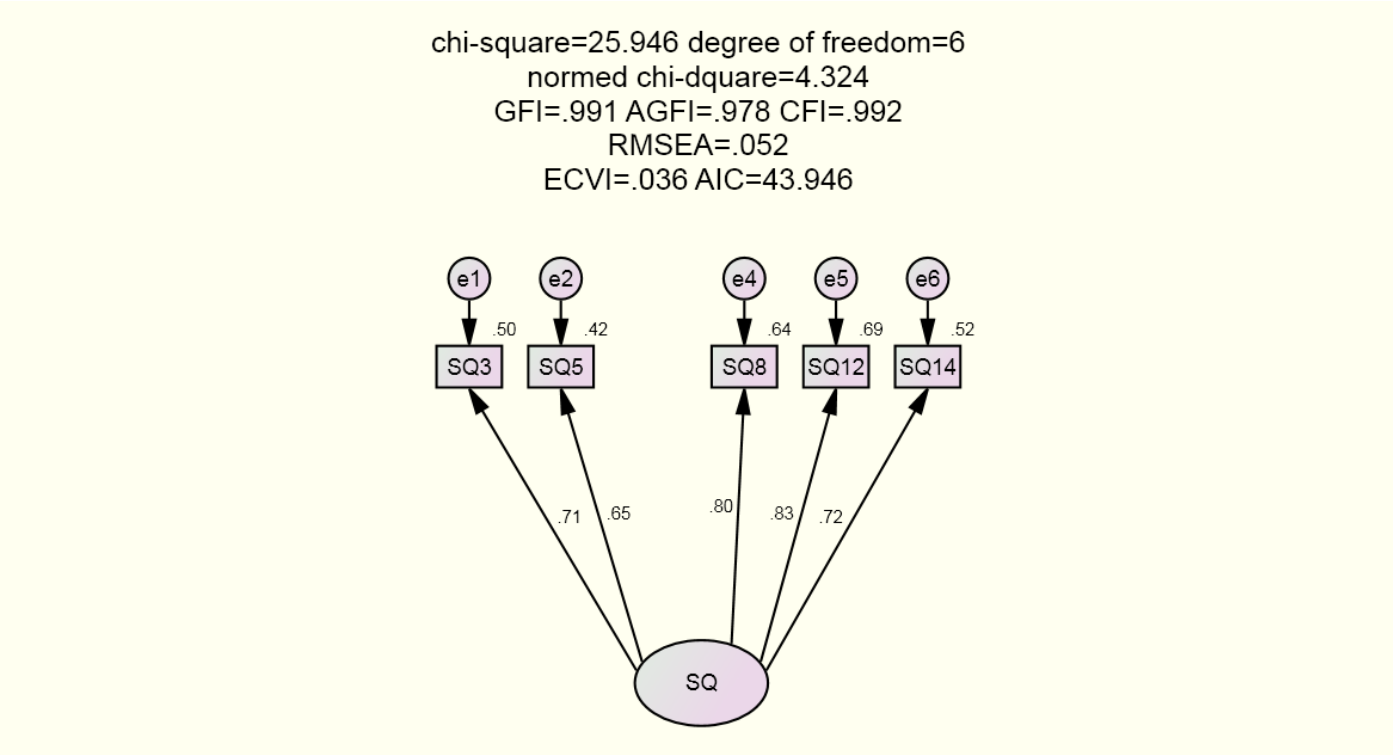

Figure 36: The CFA model of Service Quality dimension (Revised)

Table 66: Summary of the multivariate normality analysis

Variable	min	max	skew	c.r.	kurtosis	c.r.
EX1	1	7	-.834	-11.935	.449	3.210
EX2	1	7	-1.143	-16.364	1.135	8.122
EX3	1	7	-.764	-10.933	.222	1.588
EX4	1	7	-.548	-7.839	-.254	-1.821
EX5	1	7	-.514	-7.354	-.509	-3.642
EX6	1	7	-.411	-5.878	-.594	-4.252
EX7	1	7	-.611	-8.746	-.231	-1.655
EX8	1	7	-.895	-12.807	.330	2.360
EX9	1	7	-.990	-14.169	.439	3.138
EX10	1	7	-1.088	-15.572	.793	5.676
EX11	1	7	-.843	-12.059	.257	1.842
EX12	1	7	-.865	-12.378	.238	1.706
EX13	1	7	-.744	-10.653	-.064	-.460
EX14	1	7	-.488	-6.978	-.517	-3.700
EX15	1	7	-.836	-11.972	.120	.856
SQ3	1	7	-.729	-10.437	-.487	-3.486
SQ5	1	7	-.141	-2.023	-.788	-5.639
SQ8	1	7	-.632	-9.050	-230	-1.648
SQ12	1	7	-.587	-8.398	-.446	-3.190
SQ14	1	7	-.336	-4.815	-.718	-5.141
CS1	1	7	-1.043	-14.927	.779	5.573
CS2	1	7	-1.018	-14.566	.587	4.202
CS3	1	7	-1.095	-15.678	.770	5.512
CS4	1	7	-.876	-12.540	.383	2.741
CS5	1	7	-.954	-13.660	.602	4.311
CS6	1	7	-.853	-12.204	.298	2.133
CL1	1	7	-909	-13.013	.260	1.863
CL2	1	7	-1.152	-16.486	.998	7.143
CL3	1	7	-.957	-13.703	.478	3.422
CL4	1	7	-1.114	-15.946	.843	6.030
CL5	1	7	-1.250	-17.891	1.569	11.227
CL6	1	7	-1.135	-16.251	1.062	7.597
CL7	1	7	-1.162	-16.633	1.133	8.105
Multivariate					637.306	232.428

Table 70: Assessments of individual item and construct reliability

		Individual item reliability				Construct reliability
Dimension	Item	Standardized estimates (Factor loading)	SMCs	C. R. (t-value)	P	C.R.
Sense	EX1	.90	.81	-	-	.897
	EX2	.85	.71	37.04	***	
	EX3	.84	.70	36.68	***	
Relate	EX4	***.66***	***.44***	-	-	.853
	EX5	.82	.67	24.75	***	
	EX6	.94	.88	24.19	***	
Emotion	EX7	.78	.61	-	-	.896
	EX8	.90	.81	33.79	***	
	EX9	.90	.81	33.79	***	
Think	EX10	.78	.60	-	-	.896
	EX11	.75	.56	24.04	***	
	EX12	.83	.68	24.67	***	
Immersion	EX13	.74	.75	-	-	.871
	EX14	.88	.78	33.09	***	
	EX15	.87	.55	28.90	***	
Service quality	SQ3	.71	.52	-	-	.861
	SQ5	***.65***	.69	23.40	***	
	SQ8	.80	.65	31.16	***	
	SQ12	.83	***.42***	32.71	***	
	SQ14	.72	.50	26.92	***	
Today	CS1	.92	.85	-	-	.884
	CS2	.93	.87	55.56	***	
	CS3	.91	.82	52.16	***	
Overall	CS4	.91	.83	-	-	.941
	CS5	.95	.89	55.25	***	
	CS6	.89	.79	48.63	***	
Attitudinal	CL1	.82	.66	-	-	.901
	CL2	.86	.74	34.09	***	
	CL3	.85	.72	33.62	***	
	CL4	.80	.64	31.24	***	
Behavioural	CL5	.90	.81	-	-	.893
	CL6	.82	.68	35.32	***	
	CL7	.85	.72	36.52	***	

***: *p <.001*

Table 72: Assessments of Convergent validity

		Convergent validity			
Dimension	Item	Standardized estimates (Factor loading)	SMCs	C.R.	AVE
Sense	EX1	.90	.81	.897	.743
	EX2	.85	.71		
	EX3	.84	.70		
Relate	EX4	***.66***	***.44***	.853	.664
	EX5	.82	.67		
	EX6	.94	.88		
Emotion	EX7	.78	.61	.896	.743
	EX8	.90	.81		
	EX9	.90	.81		
Think	EX10	.78	.60	.896	.743
	EX11	.75	.56		
	EX12	.83	.68		
Immersion	EX13	.74	.75	.871	.693
	EX14	.88	.78		
	EX15	.87	.55		
Service quality	SQ3	.71	.52	.861	.555
	SQ5	***.65***	.69		
	SQ8	.80	.65		
	SQ12	.83	***.42***		
	SQ14	.72	.50		
Today	CS1	.92	.85	.884	.717
	CS2	.93	.87		
	CS3	.91	.82		
Overall	CS4	.91	.83	.941	.841
	CS5	.95	.89		
	CS6	.89	.79		
Attitudinal	CL1	.82	.66	.901	.694
	CL2	.86	.74		
	CL3	.85	.72		
	CL4	.80	.64		
Behavioural	CL5	.90	.81	.893	.735
	CL6	.82	.68		
	CL7	.85	.72		

Table 74: Discriminate validity (Bias-corrected accelerated method)

Parameter	Estimate	$\emptyset \pm 2\sigma$		Bias-corrected		Percentile method	
		Lower	Upper	Lower	Upper	Lower	Upper
EX<-->SQ	.695	.619	.739	.649	.734	.652	.736
SQ<-->CS	.677	.625	.792	.627	.729	.627	.730
SQ<-->CL	.566	.508	.624	.508	.619	.509	.620
EX<-->CS	.898	.856	.940	.856	.939	.855	.938
EX<-->CL	.825	.775	.875	.772	.872	.772	.872
CS<-->CL	.860	.812	.908	.810	.904	.809	.904

Table 75: Discriminate validity (SEM standardized correlation method)

Paired variables		Fixed Model		Default Model		Δx^2	Δ CFI	p-value
		x^2	DF	x^2	DF			
EX	CS	3066.84	503	2963.81	502	103.03	.027	.000
	CL	3191.05				227.24	.018	.000
SQ	EX	3872.04				908.23	.025	.000
	CS	3564.09				600.28	.030	.000
	CL	3817.60				853.79	.060	.000
CS	CL	3071.15				107.34	.030	.000

Table 76: Discriminate validity (Compared AIC and ECVI method)

Model fit	AIC	ECVI
4 Factors	952.080	.775
3 Factors (reduced CL)	2063.820	1.681
3 Factors (reduced CS)	1000.022	.814
3 Factors (reduced SQ)	1977.883	1.611
3 Factors (reduced EX)	1674.209	1.363
2 Factors (reduced CS and CL)	1998.600	1.628
2 Factors (reduced SQ and CL)	2049.936	1.669
2 Factors (reduced SQ and CS)	1915.840	1.560
2 Factors (reduced EX and CL)	1804.052	1.469
2 Factors (reduced EX and CS)	2022.791	1.647
2 Factors (reduced EX and SQ)	2074.057	1.689
1 Factor	1874.136	1.526

Bootstrap Distributions (Default model)

ML discrepancy (implied vs. sample) (Default model)

```
                          |--------------------
                  512.590 |*
                  546.636 |*
                  580.681 |***
                  614.726 |********
                  648.772 |***************
                  682.817 |******************
                  716.862 |********************
N = 1000          750.908 |******************
Mean = 724.841    784.953 |**************
S. e. = 2.416     818.998 |**********
                  853.044 |*****
                  887.089 |***
                  921.134 |**
                  955.180 |*
                  989.225 |*
                          |--------------------
```

Figure 41: Bollen-Stine Bootstrap distributions

Table 80: Assessment of offending estimates

Variables	Estimate	S. E.	C. R. (t-value)	p-value
EX	1.110	.084	13.182	***
SQ	1.623	.084	19.344	***
CS	1.400	.091	15.459	***
CL	1.094	.075	14.645	***
err1	.997	.020	50.066	***
err2	.745	.030	25.237	***
err3	.435	.026	17.054	***
err4	.579	.025	23.062	***
err5	.508	.023	21.964	***
err6	.668	.029	23.411	***
err7	.573	.027	21.137	***
err8	.340	.021	16.160	***
err9	.438	.021	20.659	***
e1	.340	.021	16.160	***
e2	.438	.021	20.659	***
e3	.566	.029	19.437	***
e4	.997	.020	50.066	***
e5	.745	.030	25.237	***
e6	.435	.026	17.054	***
e7	.579	.025	23.062	***
e8	.508	.023	21.964	***
e9	.512	.030	17.175	***
e10	.846	.043	19.482	***
e11	.668	.029	23.411	***
e12	.573	.027	21.137	***
e13	.711	.040	17.580	***
e14	.748	.044	16.958	***
e15	.810	.042	19.346	***
e16	.302	.019	15.531	***
e17	.325	.020	15.997	***
e18	.369	.021	17.930	***
e19	.322	.020	16.524	***
e20	.220	.016	13.495	***
e21	.420	.022	19.252	***

Table 79: Assessment of offending estimates (continued)

e22	.840	.040	20.798	***
e23	.489	.028	17.488	***
e24	.622	.034	18.293	***
e25	.997	.020	50.066	***
e26	.252	.021	11.784	***
e27	.686	.034	20.116	***
e28	.519	.028	18.764	***
e29	1.914	.086	22.259	***
e30	1.667	.075	22.212	***
e31	.997	.020	50.066	***
e32	.997	.020	50.066	***
e33	.997	.020	50.066	***

Table 85: Mmulti-group comparison (Ordinary & extraordinary clubs)

Model	x^2	df	Δdf	Δx^2	P	CFI	ΔTLI	RMSEA
Unconstrained	2765.76	968	-	-	.000	.946	-	.039
Measurement weights	2836.96	987	19	71.20	.000	.944	0	.039
Structural weights	2876.33	998	11	39.37	.000	.944	-.001	.039
Structural covariance	2933.48	1001	3	56.15	.000	.942	-.001	.040
Structural residuals	2961.60	1012	11	29.12	.002	.941	0	.040
Measurement residuals	3097.53	1045	33	135.9	.000	.938	-.001	.040

Table 86: Mmulti-group comparison (Weekday & Weekend)

Model	x^2	df	Δdf	Δx^2	P	CFI	ΔTLI	RMSEA
Unconstrained	2677.52	968	-	-	.000	.949	-	.038
Measurement weights	2705.18	987	19	27.66	.090	.949	-.001	.038
Structural weights	2715.52	998	11	10.35	.500	.949	0	.037
Structural covariance	2749.90	1001	3	34.38	.000	.948	-.001	.038
Structural residuals	2770.31	1012	11	20.41	.040	.948	.001	.038
Measurement residuals	2887.78	1045	33	117.47	.000	.945	-.001	.038

Table 87: Mmulti-group comparison (Different club in different stadium)

Model	x^2	df	Δdf	Δx^2	P	CFI	ΔTLI	RMSEA
Unconstrained	4959.29	2090	-	-	.000	.916	-	.033
Measurement weights	4994.30	2109	19	35.01	.014	.916	0	.033
Structural weights	5028.65	2120	11	34.35	.000	.915	0	.033
Structural covariance	5078.45	2123	3	49.80	.000	.913	0	.034
Structural residuals	5136.60	2134	11	58.51	.000	.912	-.001	.034
Measurement residuals	5306.60	2167	33	169.64	.000	.908	-.001	.034

Table 88: Mmulti-group comparison (Club of Bull, different stadium)

Model	x^2	df	Δdf	Δx^2	P	CFI	ΔTLI	RMSEA
Unconstrained	1868.38	968	-	-	.000	.892	-	.056
Measurement weights	1897.98	987	19	29.60	.057	.891	-.001	.055
Structural weights	1923.33	998	11	25.35	.008	.889	-.001	.056
Structural covariance	1951.92	1001	3	28.59	.000	.886	-.003	.056
Structural residuals	1994.99	1012	11	43.07	.000	.883	-.003	.057
Measurement residuals	2083.69	1045	33	88.70	.000	.876	-.002	.057

Table 89: Mmulti-group comparison (Club of Elephant, different stadium)

Model	x^2	df	Δdf	Δx^2	P	CFI	ΔTLI	RMSEA
Unconstrained	1987.49	968	-	-	.000	.910	-	.059
Measurement weights	2006.97	987	19	19.84	.426	.910	-.001	.059
Structural weights	2024.95	998	11	17.97	.082	.909	-.001	.059
Structural covariance	2026.81	1001	3	1.86	.602	.909	0	.059
Structural residuals	2063.93	1012	11	37.12	.000	.907	-.001	.059
Measurement residuals	2176.90	1045	33	112.97	.000	.900	-.004	.060